Stainless Steel Submersible Sewage Pump

Application

- Wastewater drainage in factories, construction sites and commercial facilities
- Drainage system in municipal sewage treatment plants
- Drainage station in residential quarters
- Municipal projects
- Methane pools and field irrigation in countryside

Pump

- Max. immersion depth: 5 m
- Max. liquid temperature: +40℃
- Liquid pH value: 4 – 10
- Liquid kinematic viscosity: $7x10^{-7}$~ $23x10^{-6}m^2/s$
- Max. liquid density: $1.2x10^3 kg/m^3$

Motor

- Copper winding
- Built-in thermal protector
- Stainless steel welded shaft
- Insulation class: B
- Protection class: IP68

Identification Codes

XSP 8 – 7 / 0.18 I

- I — Pump Body Material : Cast Iron
- 0.18 — Power (kW)
- 7 — Max. Head (m)
- 8 — Max. Flow (m^3/h)
- XSP — Sewage Submersible Pump

Technical Data

Model	Power		Outlet diameter (mm)	Voltage (V/Hz)	Max.flow (l/min)	Max.head (m)	Max.dia. of particle (mm)	GW (kgs)	Packing size (mm)	Quantity (PCS/20'TEU)
	(kW)	HP								
XSP8-7/0.18I	0.18	0.25	40,32,25	220/50	133	7	15	9	185x180x360	2322
XSP9-7.5/0.25I	0.25	0.33	40,32,25	220/50	150	7.5	15	10	185x180x380	2174

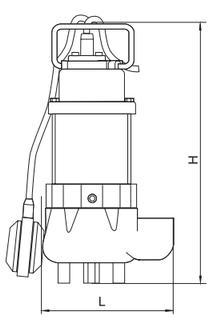

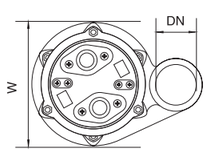

Dimension

Model	DN	L (mm)	W (mm)	H (mm)
XSP8-7/0.18I	$1^1/_4$"	166	121	335
XSP9-7.5/0.25I		166	121	355

Hydraulic Performance Curves

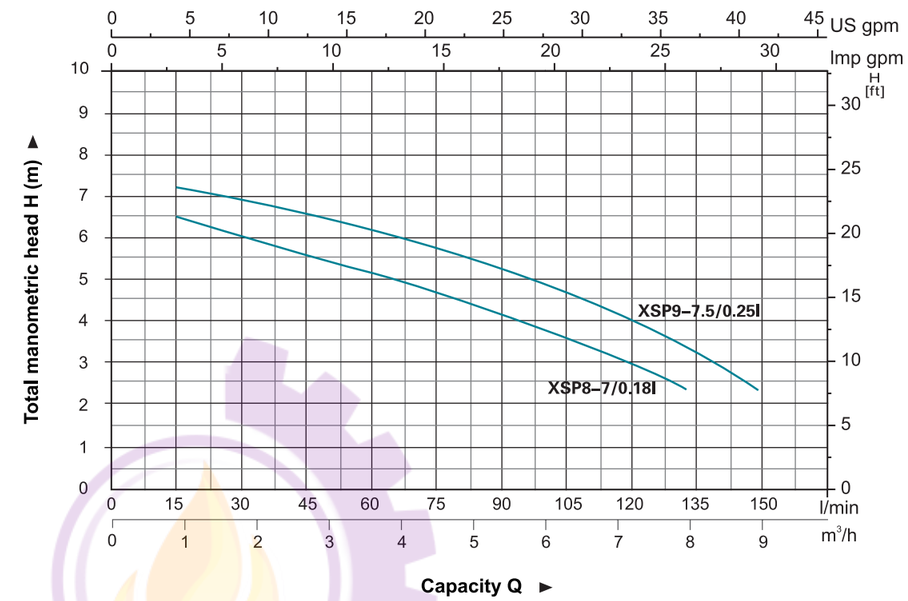

Materials Table

No.	Part	Material	No.	Part	Material
1	Bolt	Stainless steel	25	Stator	
2	Stretching washer	Stainless steel	26	Screw	Stainless steel
3	Washer	Stainless steel	27	Stretching washer	Stainless steel
4	Handle	Stainless steel	28	Thermal protector	
5	Screw	Stainless steel	29	Wave washer	65Mn
6	Cable		30	Ball bearing	
7	Flange	Stainless steel	31	Rotor	
8	Cable protector	CR	32	Ball bearing	
9	Capacitor cover	HT200	33	Rubber washer	NBR
10	Screw	Stainless steel	34	Screw	Stainless steel
11	Cable presser	Stainless steel	35	O-ring	NBR
12	Protector	NR	36	Connection part	HT200
13	O-ring	NBR	37	Mechanical seal	Carbon/Ceramic
14	Capacitor		38	O-ring	NBR
15	Rubber washer	NBR	39	Oil chamber cover	HT200
16	Screw	Steel	40	Washer	Stainless steel
17	Stretching washer	65Mn	41	Screw	Stainless steel
18	Washer	Steel	42	Oil seal	
19	Press plate	Steel	43	Impeller	PA66
20	Cable holder	NBR	44	Nut	Stainless steel
21	Screw	CuZn40	45	Connector	ABS
22	Stretching washer	65Mn	46	O-ring	NBR
23	Washer	CuZn40	47	Pump body	HT200
24	Nut	Stainless steel	48	Float switch	

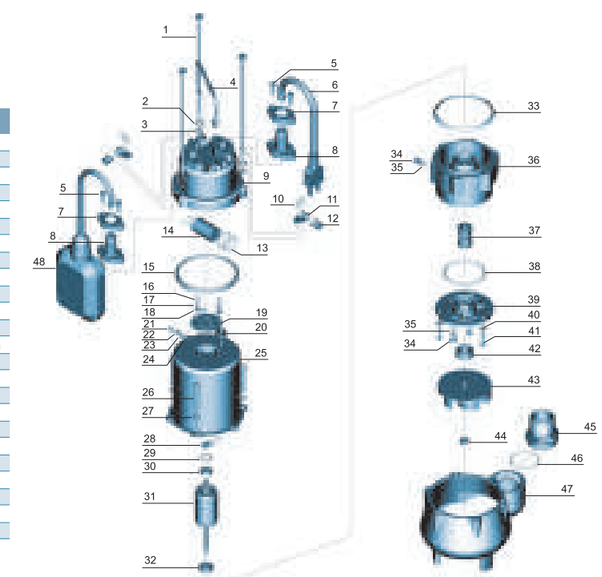

Stainless Steel Submersible Sewage Pump

Application

- Wastewater drainage in factories, construction sites and commercial facilities
- Drainage system in municipal sewage treatment plants
- Drainage station in residential quarters
- Municipal projects
- Methane pools and field irrigation in countryside

Pump

- Max. immersion depth: 5 m
- Max. liquid temperature: +40℃
- Liquid pH value: 4 – 10
- Liquid kinematic viscosity: $7x10^{-7}$~ $23x10^{-6}m^2/s$
- Max. liquid density: $1.2x10^3 kg/m^3$

Motor

- Copper winding
- Built-in thermal protector
- Stainless steel welded shaft
- Insulation class: B
- Protection class: IP68

Identification Codes

XSP 12 – 8.5 / 0.45 I

- I — Pump Body Material : Cast Iron
- 0.45 — Power (kW)
- 8.5 — Max. Head (m)
- 12 — Max. Flow (m^3/h)
- XSP — Sewage Submersible Pump

Hydraulic Performance Curves

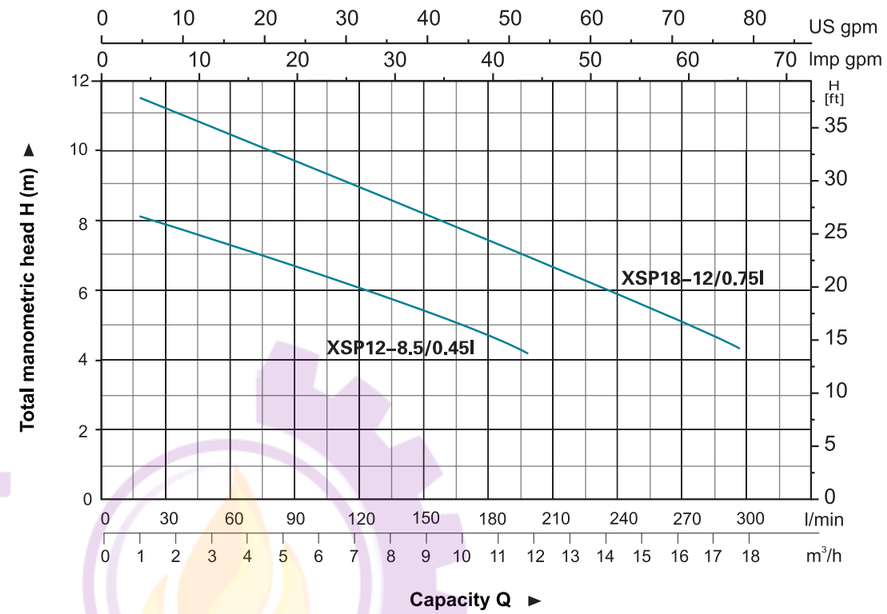

Technical Data

Model	Power (kW)	Power HP	Outlet diameter (mm)	Voltage (V/Hz)	Max.flow (l/min)	Max.head (m)	Max.dia. of particle (mm)	GW (kgs)	Packing size (mm)	Quantity (PCS/20'TEU)
XSP12-8.5/0.45I	0.45	0.6	50	220/50	200	8.5	25	18.2	495x263x222	1010
XSP18-12/0.75I	0.75	1.0	50	220/50	300	12	25	20.2	540x265x195	1056

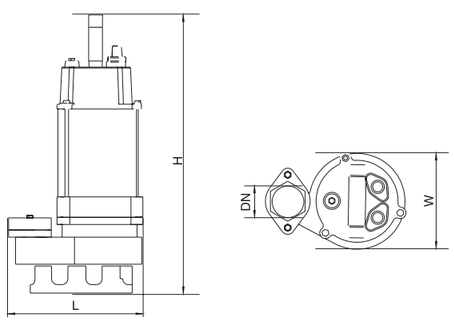

Dimension

Model	DN	L (mm)	W (mm)	H (mm)
XSP12-8.5/0.45I	2"	225	150	450
XSP18-12/0.75I		226	159	500

Materials Table

No.	Part	Material	No.	Part	Material
1	Bolt	Stainless steel	30	Wave washer	65Mn
2	Stretching washer	Stainless steel	31	Ball bearing	
3	Washer	Stainless steel	32	Rotor	
4	Bolt	Stainless steel	33	Ball bearing	
5	Washer	Stainless steel	34	Screw	Stainless steel
6	Handle	Stainless steel	35	Washer	Stainless steel
7	Nut	Stainless steel	36	Connection part	HT200
8	Protector	NR	37	Mechanical seal	Carbon/Ceramic
9	Cable presser	Stainless steel	38	O-ring	NBR
10	Washer	Stainless steel	39	Oil chamber cover	HT200
11	Screw	Stainless steel	40	Screw	Stainless steel
12	Bolt	Stainless steel	41	Washer	Stainless steel
13	O-ring	NBR	42	O-ring	NBR
14	Screw	Stainless steel	43	Screw	Stainless steel
15	Flange	Stainless steel	44	Oil seal	
16	Cable		45	Impeller	HT200
17	Cable protector	CR	46	Nut	Stainless steel
18	Capacitor cover	HT200	47	Bolt	Stainless steel
19	Capacitor		48	Washer	Stainless steel
20	O-ring	NBR	49	Connector	ABS
21	Rubber washer	NBR	50	O-ring	NBR
22	Screw	CuZn40	51	Connector nut	HT200
23	Stretching washer	65Mn	52	Rubber washer	NBR
24	Washer	CuZn40	53	Pump body	HT200
25	Cable holder	NBR	54	Base plate	HT200
26	Motor cover	HT200	55	Washer	Stainless steel
27	Thermal protector		56	Screw	Stainless steel
28	O-ring	NBR	57	Float switch	
29	Stator				

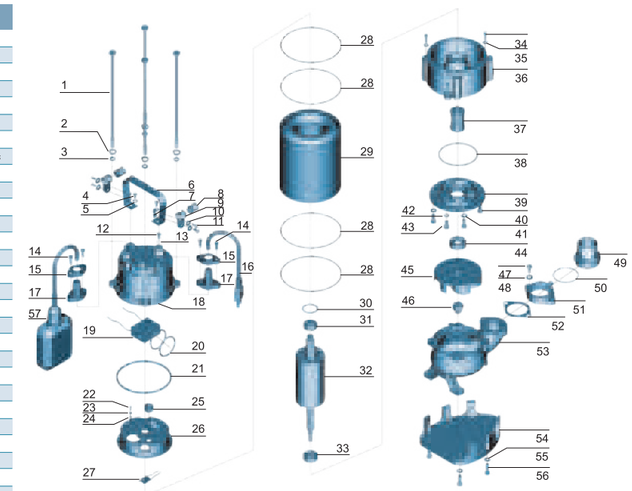

Application

- Wastewater drainage in factories, construction sites and commercial facilities
- Drainage system in municipal sewage treatment plants
- Drainage station in residential quarters
- Municipal projects
- Methane pools and field irrigation in countryside

Pump

- Max. immersion depth: 5 m
- Max. liquid temperature: +40℃
- Liquid pH value: 4 – 10
- Liquid kinematic viscosity: $7x10^{-7}$~ $23x10^{-6}m^2/s$
- Max. liquid density: $1.2x10^3 kg/m^3$

Motor

- Copper winding
- Built-in thermal protector
- Stainless steel welded shaft
- Insulation class: B
- Protection class: IP68

Identification Codes

XSP 20 – 9 / 1.1 I

- I — Pump Body Material : Cast Iron
- 1.1 — Power (kW)
- 9 — Max. Head (m)
- 20 — Max. Flow (m^3/h)
- XSP — Sewage Submersible Pump

Technical Data

Model	Power		Outlet diameter (mm)	Voltage (V/Hz)	Max.flow (l/min)	Max.head (m)	Max.dia. of particle (mm)	GW (kgs)	Packing size (mm)	Quantity (PCS/20'TEU)
	(kW)	HP								
XSP20-9/1.1I	1.1	1.5	50	220/50	333	9	35	20.9	580x320x250	681

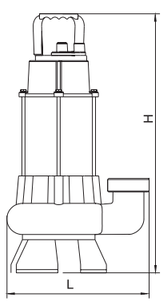

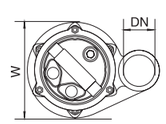

Dimension

Model	DN	L (mm)	W (mm)	H (mm)
XSP20-9/1.1I	2"	280	200	530

Hydraulic Performance Curves

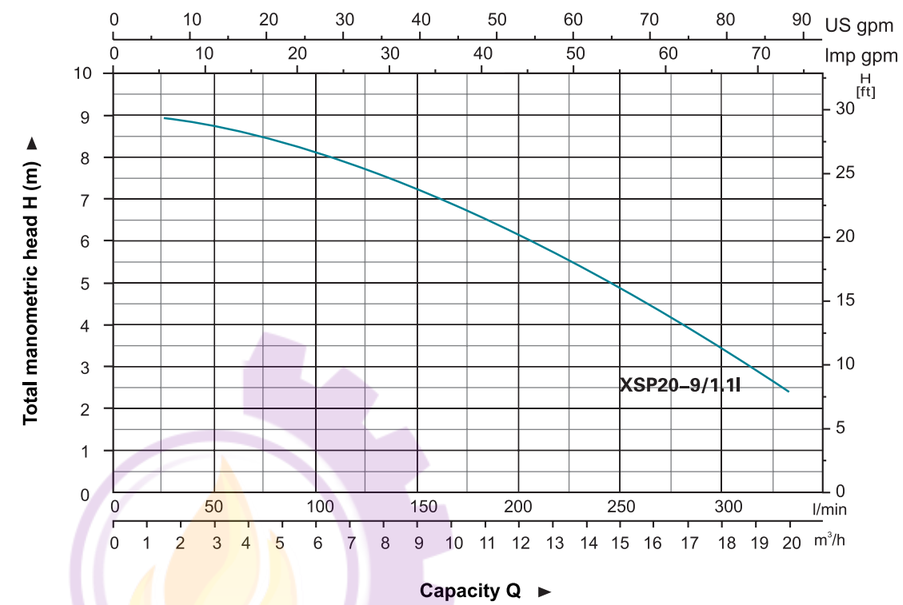

Materials Table

No.	Part	Material	No.	Part	Material
1	Bolt	Stainless steel	24	Washer	CuZn40
2	Stretching washer	Stainless steel	25	Cable holder	NBR
3	Washer	Stainless steel	26	Upper cover	HT200
4	Bolt	Stainless steel	27	Thermal protector	
5	Washer	Stainless steel	28	O-ring	NBR
6	Handle	Stainless steel	29	Stator	
7	Nut	Stainless steel	30	Wave washer	65Mn
8	Protector	NR	31	Ball bearing	
9	Cable presser	Stainless steel	32	Rotor	
10	Washer	Stainless steel	33	Ball bearing	
11	Screw	Stainless steel	34	Lower cover	HT200
12	Bolt	Stainless steel	35	Mechanical seal	Carbon/Ceramic
13	O-ring	NBR	36	Connector	ABS
14	Screw	Stainless steel	37	O-ring	NBR
15	Flange	Stainless steel	38	Pump body	HT200
16	Cable		39	Oil seal	
17	Cable protector	CR	40	Impeller	HT200
18	Capacitor cover	HT200	41	Nut	Stainless steel
19	Capacitor		42	Pump cover	Stainless steel
20	O-ring	NBR	43	Base plate	Stainless steel
21	Rubber washer	NBR	44	Washer	Stainless steel
22	Screw	CuZn40	45	Bolt	Stainless steel
23	Stretching washer	65Mn	46	Float switch	

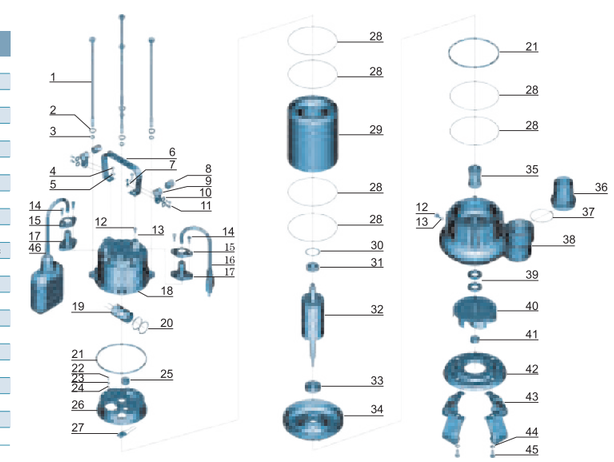

آتور صنعت ATOORSANAT

Stainless Steel Submersible Sewage Pump

Application

- Wastewater drainage in factories, construction sites and commercial facilities
- Drainage system in municipal sewage treatment plants
- Drainage station in residential quarters
- Municipal projects
- Methane pools and field irrigation in countryside

Pump

- Max. immersion depth: 5 m
- Max. liquid temperature: +40℃
- Liquid pH value: 4 – 10
- Liquid kinematic viscosity: $7x10^{-7}$~ $23x10^{-6}m^2/s$
- Max. liquid density: $1.2x10^3 kg/m^3$

Motor

- Copper winding
- Built-in thermal protector
- Stainless steel welded shaft
- Insulation class: B
- Protection class: IP68

Identification Codes

XSP 42 – 17 / 2.2 I

- I: Pump Body Material: Cast Iron
- 2.2: Power (kW)
- 17: Max. Head (m)
- 42: Max. Flow (m^3/h)
- XSP: Sewage Submersible Pump

Technical Data

Model	Power		Outlet diameter (mm)	Voltage (V/Hz)	Max.flow (l/min)	Max.head (m)	Max.dia. of particle (mm)	GW (kgs)	Packing size (mm)	Quantity (PCS/20'TEU)
	(kW)	HP								
XSP16.2-22/1.5I	1.5	2.0	40	220/50	270	22	10	27.6	585x350x245	540
XSP42-17/2.2I	2.2	3.0	75	220/50	700	17	20	29.7	585x350x245	540

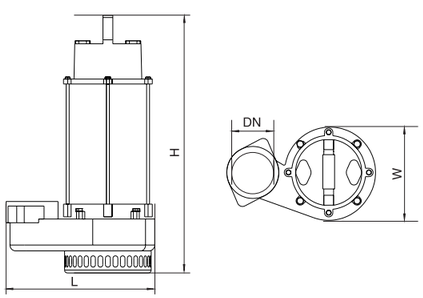

Dimension

Model	DN	L (mm)	W (mm)	H (mm)
XSP16.2-22/1.5I	2"	308	198	530
XSP42-17/2.2I	2 1/2"	302	190	535

Hydraulic Performance Curves

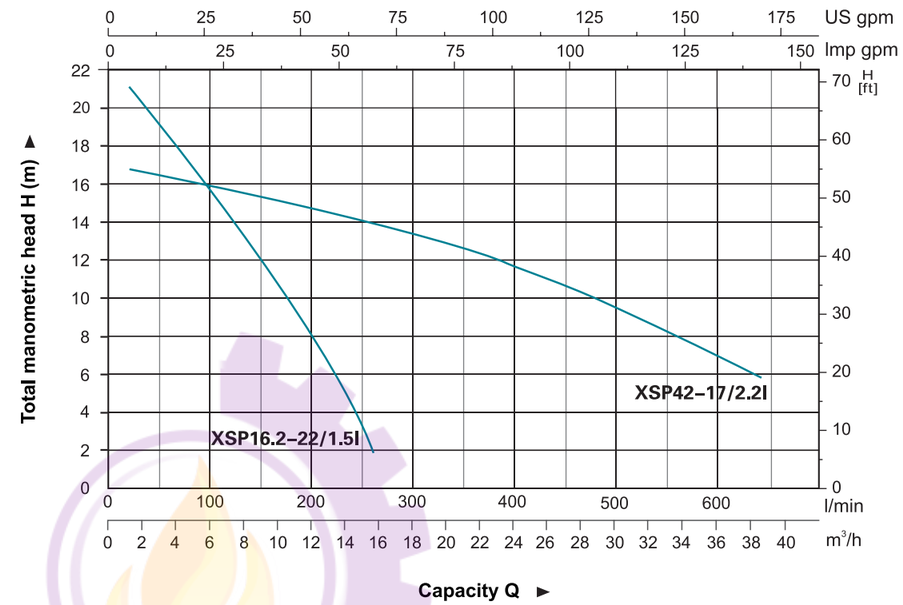

Materials Table

No.	Part	Material	No.	Part	Material
1	Bolt	Stainless steel	30	Undulated washer	65Mn
2	Stretching washer	Stainless steel	31	Ball bearing	
3	Washer	Stainless steel	32	Rotor	
4	Bolt	Stainless steel	33	Ball bearing	
5	Washer	Stainless steel	34	Screw	Stainless steel
6	Handle	Stainless steel	35	Washer	Stainless steel
7	Nut	Stainless steel	36	Connection part	HT 200
8	Protector	NR	37	Mechanical seal	Carbon/Ceramic
9	Cable presser	Stainless steel	38	O-ring	NBR
10	Washer	Stainless steel	39	Oil chamber cover	HT 200
11	Screw	Stainless steel	40	Screw	Stainless steel
12	Bolt	Stainless steel	41	Washer	Stainless steel
13	O-ring	NBR	42	O-ring	NBR
14	Screw	Stainless steel	43	Screw	Stainless steel
15	Flange	Stainless steel	44	Oil seal	
16	Cable		45	Impeller	HT 200
17	Cable protector	CR	46	Nut	Stainless steel
18	Capacitor cover	HT 200	47	Bolt	Stainless steel
19	Capacitor		48	Washer	Stainless steel
20	O-ring	NBR	49	Out-let connector	ABS
21	Rubber washer	NBR	50	O-ring	NBR
22	Screw	CuZn40	51	Connection nut	HT 200
23	Stretching washer	65Mn	52	Rubber washer	NBR
24	Washer	CuZn40	53	Pump body	HT 200
25	Line protector	NBR	54	Base plate	HT 200
26	Motor cover	HT 200	55	Washer	Stainless steel
27	Thermal protector		56	Screw	Stainless steel
28	O-ring	NBR	57	Key	
29	Motor stator	Stainless steel	58	Float switch	

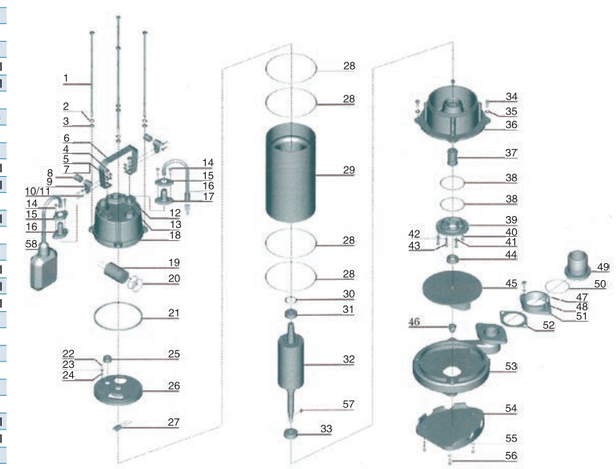

Application

- Wastewater drainage in factories, construction sites and commercial facilities
- Drainage system in municipal sewage treatment plants
- Drainage station in residential quarters
- Municipal projects
- Methane pools and field irrigation in countryside

Pump

- Max. immersion depth: 5 m
- Max. liquid temperature: +40℃
- Liquid pH value: 4 – 10
- Liquid kinematic viscosity: $7x10^{-7}$~ $23x10^{-6}m^2/s$
- Max. liquid density: $1.2x10^3kg/m^3$

Motor

- Copper winding
- Built-in thermal protector
- Stainless steel welded shaft
- Insulation class: B
- Protection class: IP68

Identification Codes

XSP 9 – 7.5 / 0.25 S

- S — Pump Body Material : Stainless Steel
- 0.25 — Power (kW)
- 7.5 — Max. Head (m)
- 9 — Max. Flow (m^3/h)
- XSP — Sewage Submersible Pump

Hydraulic Performance Curves

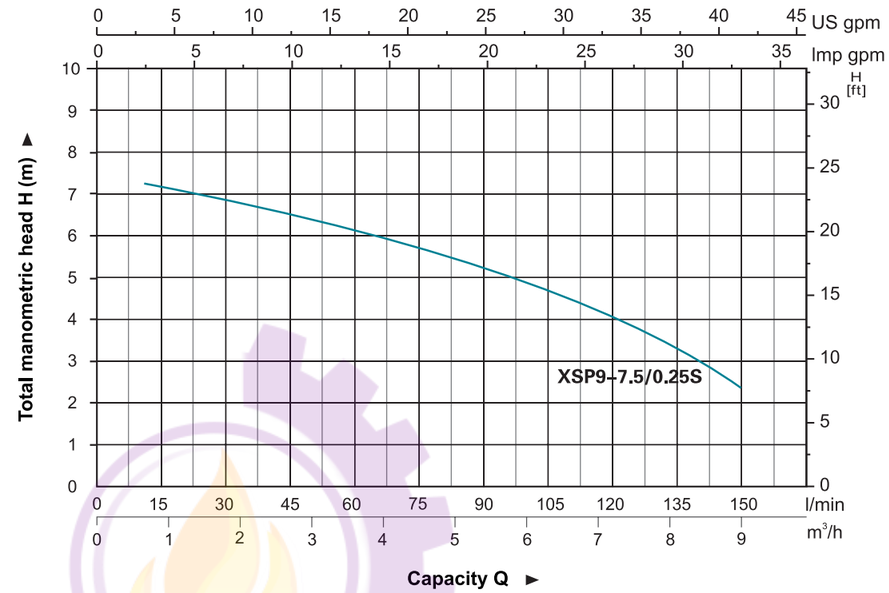

Technical Data

Model	Power		Outlet diameter (mm)	Voltage (V/Hz)	Max.flow (l/min)	Max.head (m)	Max.dia. of particle (mm)	GW (kgs)	Packing size (mm)	Quantity (PCS/20 TEU)
	(kW)	HP								
XSP9-7.5/0.25S	0.25	0.33	40,32,25	220/50	150	7.5	15	10.5	185x180x380	2110

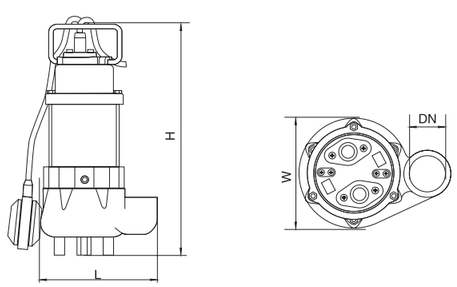

Dimension

Model	DN	L (mm)	W (mm)	H (mm)
XSP9-7.5/0.25S	1¼"	165	120	360

Materials Table

No.	Part	Material	No.	Part	Material
1	Bolt	Stainless steel	25	Stator	
2	Stretching washer	Stainless steel	26	Screw	Stainless steel
3	Washer	Stainless steel	27	Stretching washer	Stainless steel
4	Handle	Stainless steel	28	Thermal protector	
5	Screw	Stainless steel	29	Wave washer	65Mn
6	Cable		30	Ball bearing	
7	Flange	Stainless steel	31	Rotor	
8	Cable protector	CR	32	Ball bearing	
9	Capacitor cover	Stainless steel	33	Rubber washer	FKM
10	Screw	Stainless steel	34	Screw	Stainless steel
11	Cable presser	Stainless steel	35	O-ring	FKM
12	Protector	FKM	36	Connection part	Stainless steel
13	O-ring	NBR	37	Mechanical seal	Carbon/Ceramic
14	Capacitor		38	O-ring	FKM
15	Rubber washer	FKM	39	Oil chamber cover	Stainless steel
16	Screw	Steel	40	Washer	Stainless steel
17	Stretching washer	65Mn	41	Screw	Stainless steel
18	Washer	Steel	42	Oil seal	
19	Press plate	Steel	43	Impeller	Stainless steel
20	Cable holder	NBR	44	Nut	Stainless steel
21	Screw	CuZn40	45	Connector	ABS
22	Stretching washer	65Mn	46	O-ring	FKM
23	Washer	CuZn40	47	Pump body	Stainless steel
24	Nut	Stainless steel			

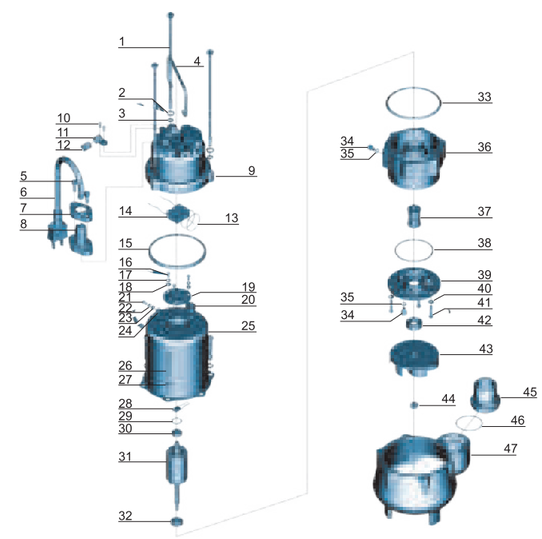

آتور صنعت ATOORSANAT

Stainless Steel Submersible Sewage Pump

Application

- Wastewater drainage in factories, construction sites and commercial facilities
- Drainage system in municipal sewage treatment plants
- Drainage station in residential quarters
- Municipal projects
- Methane pools and field irrigation in countryside

Pump

- Max. immersion depth: 5 m
- Max. liquid temperature: +40℃
- Liquid pH value: 4 – 10
- Liquid kinematic viscosity: $7x10^{-7}$~ $23x10^{-6}m^2/s$
- Max. liquid density: $1.2x10^3 kg/m^3$

Motor

- Copper winding
- Built-in thermal protector
- Stainless steel welded shaft
- Insulation class: B
- Protection class: IP68

Identification Codes

XSP 18 – 12 / 0.75 S

- S — Pump Body Material: Stainless Steel
- 0.75 — Power (kW)
- 12 — Max. Head (m)
- 18 — Max. Flow (m^3/h)
- XSP — Sewage Submersible Pump

Technical Data

Model	Power		Outlet diameter (mm)	Voltage (V/Hz)	Max.flow (l/min)	Max.head (m)	Max.dia. of particle (mm)	GW (kgs)	Packing size (mm)	Quantity (PCS/20'TEU)
	(kW)	HP								
XSP18-12/0.75S	0.75	1.0	50	220/50	300	12	25	22.2	540x265x195	1056
XSP16.2-22/1.5S	1.5	2.0	40	220/50	270	22	10	27.5	585x350x245	540

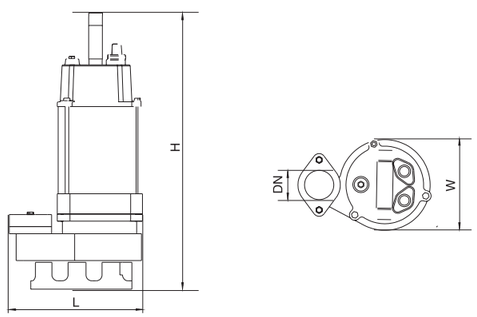

Dimension

Model	DN	L (mm)	W (mm)	H (mm)
XSP18-12/0.75S	2"	226	159	500
XSP16.2-22/1.5S		275	198	530

Hydraulic Performance Curves

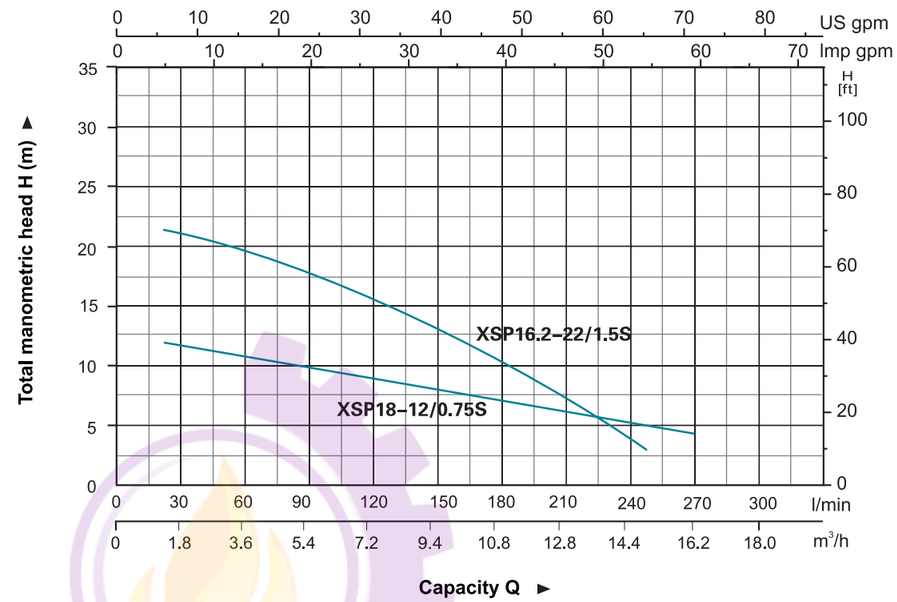

Materials Table

No.	Part	Material	No.	Part	Material
1	Bolt	Stainless steel	29	Stator	
2	Stretching washer	Stainless steel	30	Wave washer	65Mn
3	Washer	Stainless steel	31	Ball bearing	
4	Bolt	Stainless steel	32	Rotor	
5	Washer	Stainless steel	33	Ball bearing	
6	Handle	Stainless steel	34	Screw	Stainless steel
7	Nut	Stainless steel	35	Washer	Stainless steel
8	Protector	FKM	36	Connection part	Stainless steel
9	Cable presser	Stainless steel	37	Mechanical seal	Carbon/Ceramic
10	Washer	Stainless steel	38	O-ring	FKM
11	Screw	Stainless steel	39	Oil chamber cover	Stainless steel
12	Bolt	Stainless steel	40	Screw	Stainless steel
13	O-ring	FKM	41	Washer	Stainless steel
14	Bolt	Stainless steel	42	O-ring	FKM
15	Flange	Stainless steel	43	Screw	Stainless steel
16	Cable		44	Oil seal	
17	Cable protector	CR	45	Impeller	Stainless steel
18	Capacitor cover	Stainless steel	46	Nut	
19	Capacitor		47	Bolt	Stainless steel
20	O-ring	NBR	48	Washer	Stainless steel
21	Rubber washer	FKM	49	Connector	ABS
22	Screw	CuZu40	50	O-ring	FKM
23	Stretching washer	65Mn	51	Connection nut	Stainless steel
24	Washer	CuZu40	52	Rubber washer	FKM
25	Cable holder	NBR	53	Pump body	Stainless steel
26	Motor cover	HT200	54	Base plate	Stainless steel
27	Thermal protector		55	Washer	Stainless steel
28	O-ring	FKM	56	Screw	Stainless steel

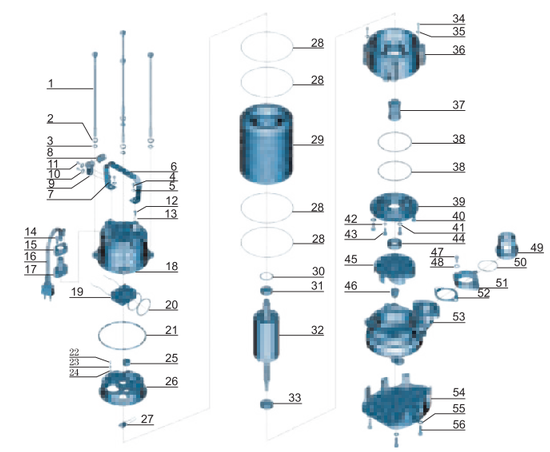

Stainless Steel Submersible Sewage Pump

Application

- Wastewater drainage in factories, construction sites and commercial facilities
- Drainage system in municipal sewage treatment plants
- Drainage station in residential quarters
- Municipal projects
- Methane pools and field irrigation in countryside

Pump

- Max. immersion depth: 5 m
- Max. liquid temperature: +40℃
- Liquid pH value: 4 – 10
- Liquid kinematic viscosity: $7x10^{-7}$~ $23x10^{-6}m^2/s$
- Max. liquid density: $1.2x10^3 kg/m^3$

Motor

- Copper winding
- Built-in thermal protector
- Stainless steel welded shaft
- Insulation class: B
- Protection class: IP68

Identification Codes

XSP 14 – 7 / 1.1 I D

- D — Cutting Blade
- I — Pump Body Material: Cast Iron
- 1.1 — Power (kW)
- 7 — Max. Head (m)
- 14 — Max. Flow (m^3/h)
- XSP — Sewage Submersible Pump

Technical Data

Model	Power		Outlet diameter (mm)	Voltage (V/Hz)	Max.flow (l/min)	Max.head (m)	Max.dia. of particle (mm)	GW (kgs)	Packing size (mm)	Quantity (PCS/20'TEU)
	(kW)	HP								
XSP14-7/1.1ID	1.1	1.5	50	220/50	233	7	22.5	24	530x295x245	765

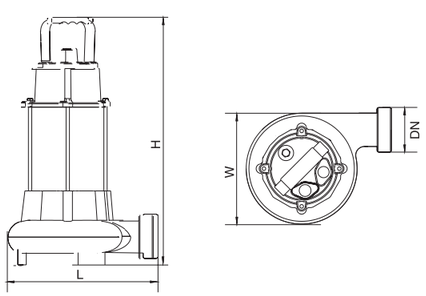

Dimension

Model	DN	L (mm)	W (mm)	H (mm)
XSP14-7/1.1ID	2"	255	202	478

Hydraulic Performance Curves

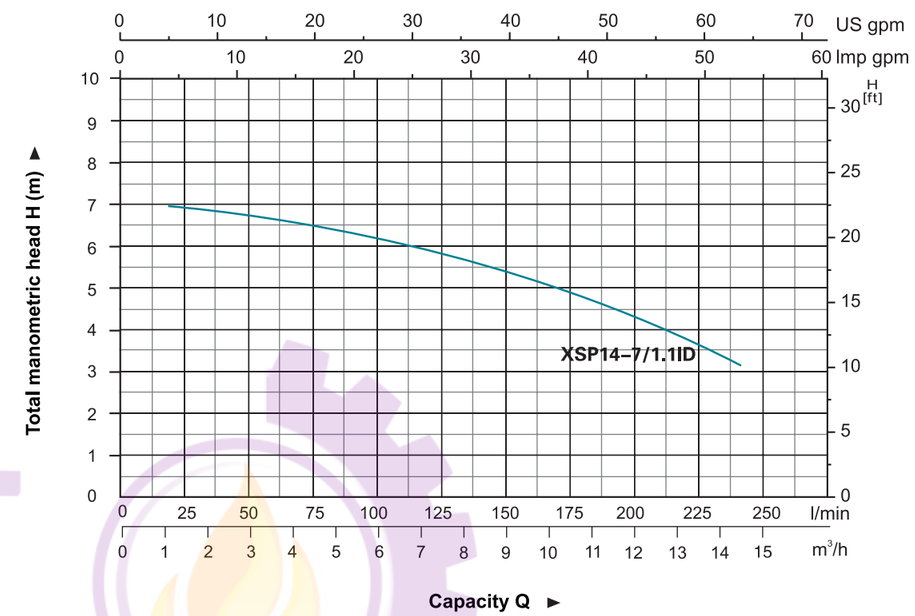

Materials Table

No.	Part	Material	No.	Part	Material
1	Bolt	Stainless steel	26	Upper cover	HT200
2	Stretching washer	Stainless steel	27	Thermal protector	
3	Washer	Stainless steel	28	O-ring	NBR
4	Bolt	Stainless steel	29	Stator	
5	Washer	Stainless steel	30	Wave washer	65Mn
6	Handle	Stainless steel	31	Ball bearing	
7	Nut	Stainless steel	32	Rotor	
8	Protector	NR	33	Key	Steel
9	Cable presser	Stainless steel	34	Ball bearing	
10	Washer	Stainless steel	35	Lower cover	HT200
11	Screw	Stainless steel	36	Mechanical seal	Carbon/Ceramic
12	Bolt	Stainless steel	37	Pump body	HT200
13	O-ring	NBR	38	Oil seal	
14	Screw	Stainless steel	39	Impeller	HT200
15	Flange	Stainless steel	40	Shredding ring	40Cr
16	Cable		41	Washer	Stainless steel
17	Cable protector	CR	42	Screw	Stainless steel
18	Capacitor cover	HT200	43	Radial cutter	40Cr
19	Capacitor		44	Washer	40Cr
20	O-ring	NBR	45	Screw	Stainless steel
21	Rubber washer	NBR	46	Float switch	
22	Screw	CuZn40	47	O-ring	NBR
23	Stretching washer	65Mn	48	Connection nut	ABS
24	Washer	CuZn40	49	Connector	ABS
25	Cable holder	NBR			

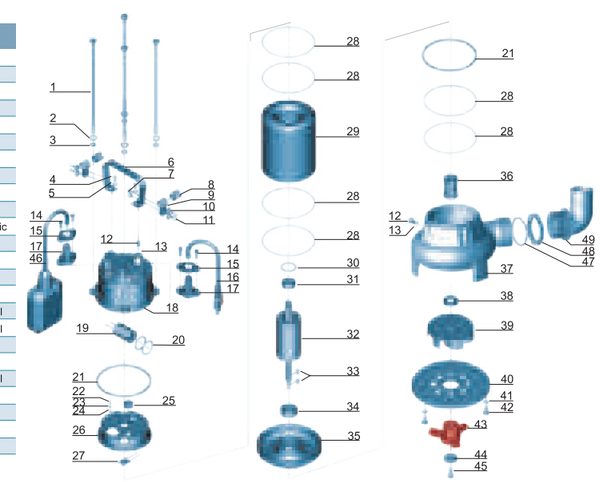

Stainless Steel Submersible Sewage Pump

Cutting Blade

Application

- Wastewater drainage in factories, construction sites and commercial facilities
- Drainage system in municipal sewage treatment plants
- Drainage station in residential quarters
- Municipal projects
- Methane pools and field irrigation in countryside

Pump

- Max. immersion depth: 5 m
- Max. liquid temperature: +40℃
- Liquid pH value: 4 – 10
- Liquid kinematic viscosity: $7x10^{-7}$~ $23x10^{-6}m^2/s$
- Max. liquid density: $1.2x10^3 kg/m^3$

Motor

- Copper winding
- Built-in thermal protector
- Stainless steel welded shaft
- Insulation class: B
- Protection class: IP68

Identificati

XSP 18 – 12 / 1.3 I D

- D — Cutting Blade
- I — Pump Body Material : Cast Iron
- 1.3 — Power (kW)
- 12 — Max. Head (m)
- 18 — Max. Flow (m^3/h)
- XSP — Sewage Submersible Pump

Technical Data

Model	Power		Outlet diameter (mm)	Voltage (V/Hz)	Max.flow (l/min)	Max.head (m)	GW (kgs)	Packing size (mm)	Quantity (PCS/20'TEU)
	(kW)	HP							
XSP18-12/1.3ID	1.3	1.75	50	220/50	300	12	22.8	570x310x245	675
XSP26.4-10/1.8ID	1.8	2.4	75	220/50	440	10	30	585x350x245	540

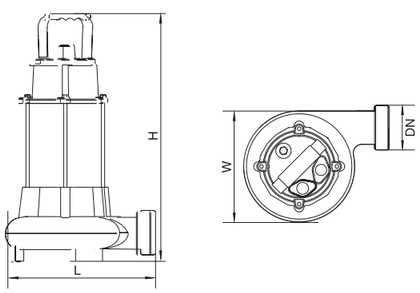

Dimension

Model	DN	L (mm)	W (mm)	H (mm)
XSP18-12/1.3ID	2"	252	191	510
XSP26.4-10/1.8ID	$2^1/_2$"	290	196	520

Hydraulic Performance Curves

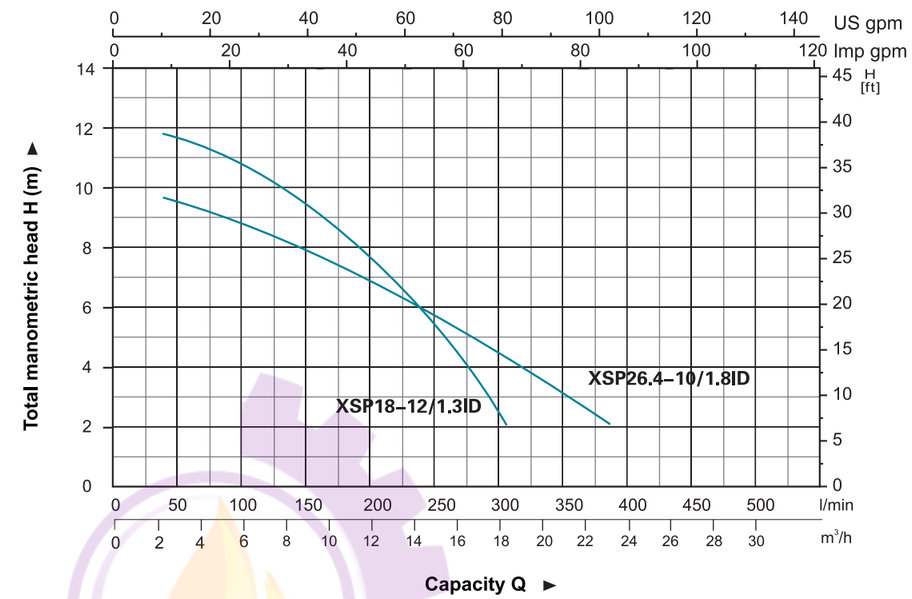

Materials Table
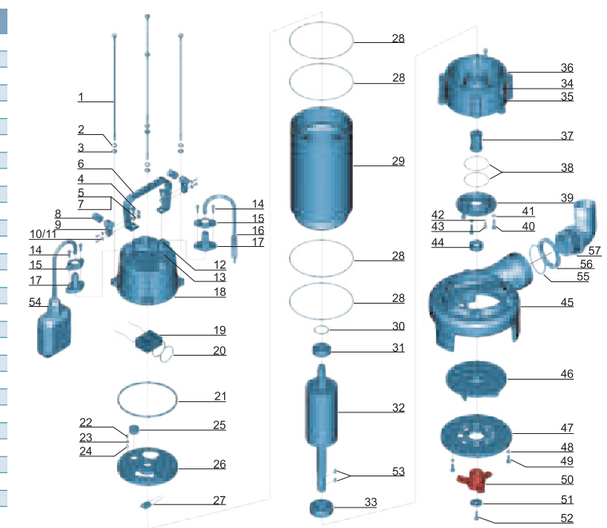
No.	Part	Material	No.	Part	Material
1	Bolt	Stainless steel	30	Undulated washer	65Mn
2	Stretching washer	Stainless steel	31	Ball bearing	
3	Washer	Stainless steel	32	Rotor	
4	Bolt	Stainless steel	33	Ball bearing	
5	Washer	Stainless steel	34	Screw	Stainless steel
6	Handle	Stainless steel	35	Washer	Stainless steel
7	Nut	Stainless steel	36	Connection part	HT200
8	Protector	NR	37	Mechanical seal	Carbon/Ceramic
9	Cable presser	Stainless steel	38	O-ring	NBR
10	Washer	Stainless steel	39	Oil chamber cover	HT200
11	Screw	Stainless steel	40	Screw	Stainless steel
12	Bolt	Stainless steel	41	Washer	Stainless steel
13	O-ring	NBR	42	O-ring	NBR
14	Screw	Stainless steel	43	Screw	Stainless steel
15	Flange	Stainless steel	44	Oil seal	
16	Cable		45	Pump body	HT200
17	Cable Protector	CR	46	Impeller	HT200
18	Capacitor cover	HT200	47	Shredding ring	40Cr
19	Capacitor		48	Washer	Stainless steel
20	O-ring	NBR	49	Bolt	Stainless steel
21	Rubber washer	NBR	50	Radial cutter	40Cr
22	Screw	CuZn40	51	Washer	40Cr
23	Stretching washer	65Mn	52	Screw	Stainless steel
24	Washer	CuZn40	53	Key	Steel
25	Line protector	NBR	54	Float switch	
26	Motor cover	HT200	55	O-ring	NBR
27	Thermal protector		56	Connection nut	ABS
28	O-ring	NBR	57	Out-let connector	ABS
29	Motor stator	Stainless steel