GEARMOTORS

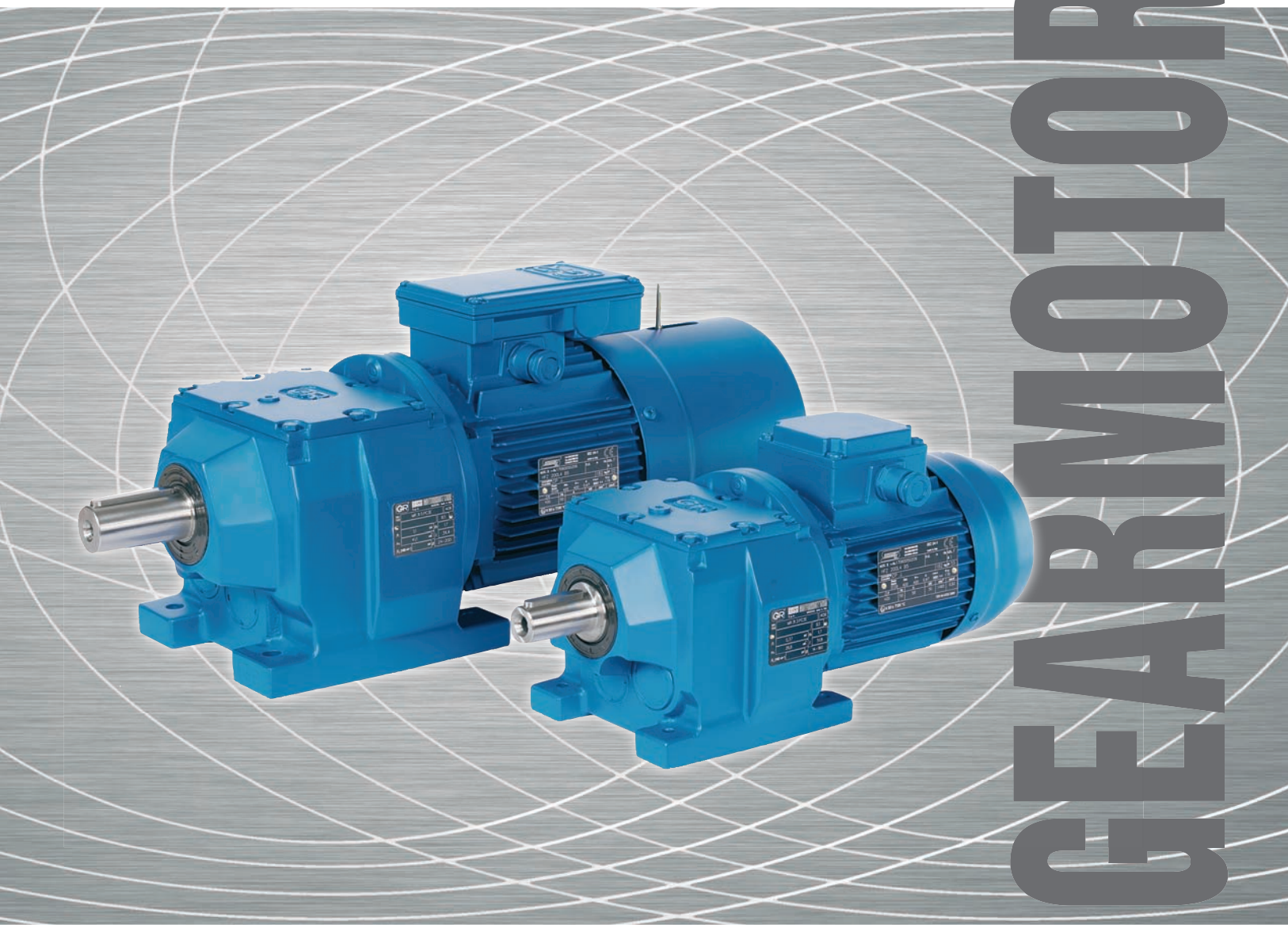

North America Issue

ROSSI

STANDARDFIT

ES07

COAXIAL GEARMOTORS

P_1 0.12 ... 15 hp, $T_{N2} \leqslant$ 8 000 lbf, i_N 4 ... 200, n_2 5.6 ... 450 rpm

Contents

MEMBER OF AGMA

ROSSI MOTORIDUTTORI

All gearmotors components in this catalog are manufactured by Rossi Motoriduttori.

For further technical information please visit our website www.rossi-group.com or contact the headquarters.

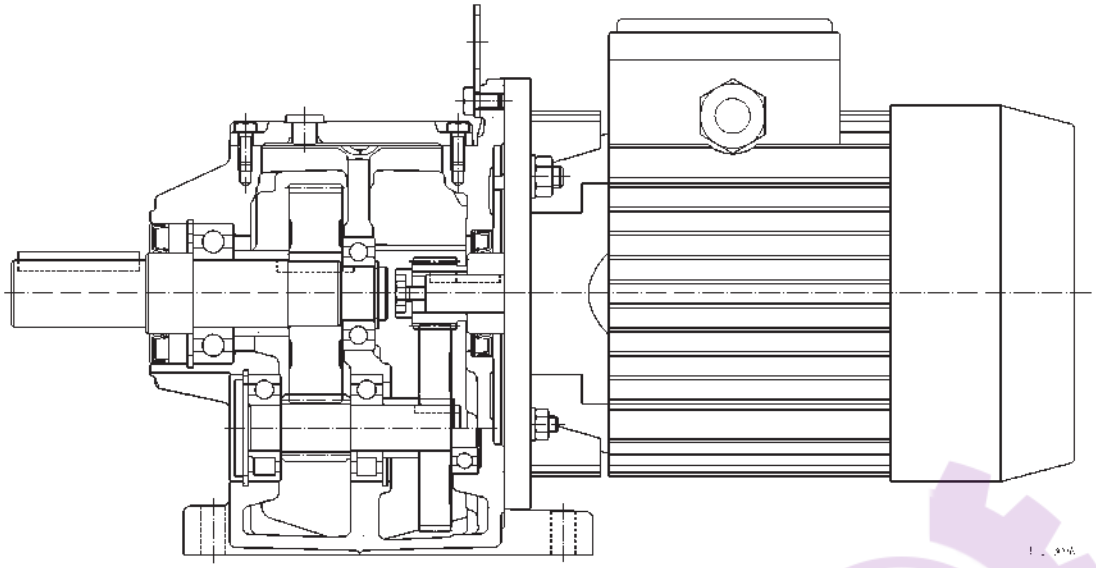

MR 2I
with 2 helical gear stages

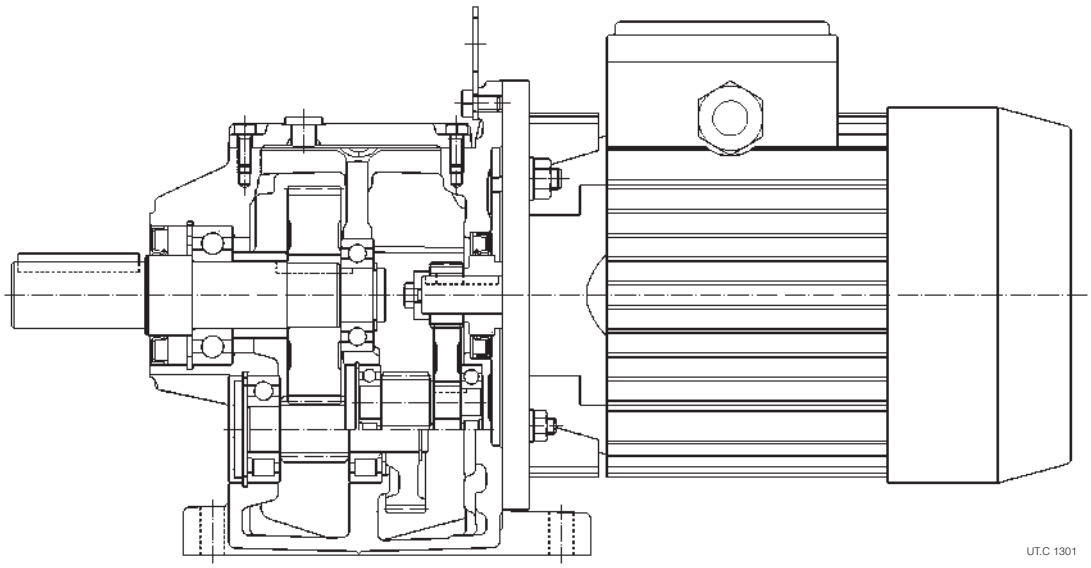

MR 3I
with 3 helical gear stages

	Features	Benefits
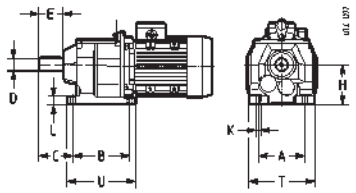	Standardfit	• **Interchangeability with market leader gearmotors** • **No additional costs for drawing updating and no machine changes are needed**
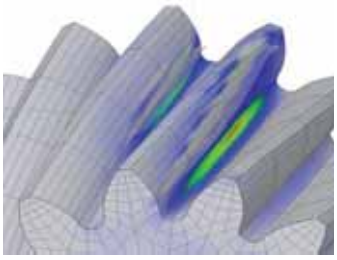	Performance	• **Performance higher by approx. 6÷12% compared to competitors** • **High precision ground gear pairs achieving reduced backlash as a standard** • **Excellent low noise running for any critical environment**
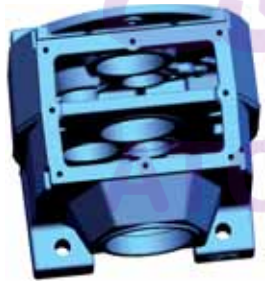	Cast iron single-piece housing	• **Outstanding torsional stiffness for higher overload withstanding** • **Performance higher by approx. 6÷12% compared to competitors thanks to the extremely precise housing machining** • **Excellent low noise running for any critical environment**
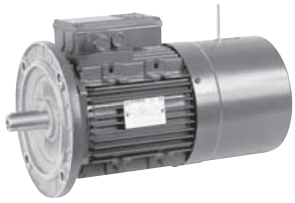	NEMA MG1-12 electric motor Mating dimensions to IEC 72-1	• **Ready to use in NEMA enviroment** • **Universal availability thanks to IEC stock flexibility**
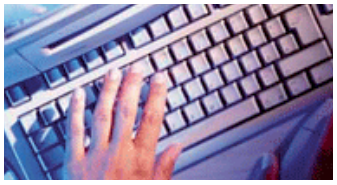	Competent assistance	• **Worldwide Customer Service** • **E-catalog on Rossi website for an easy and quick self-made selection**

	Features	Benefits
	Global service	• **Direct worldwide Sale and Service Network** • **Affiliated companies and distributors with on hand inventories** • **Deliveries in 24 hours**
	3 year warranty	• **3 year trouble-free running** • **Applicable to direct Customers and Customers of authorized ISO 9000 certified distributors**
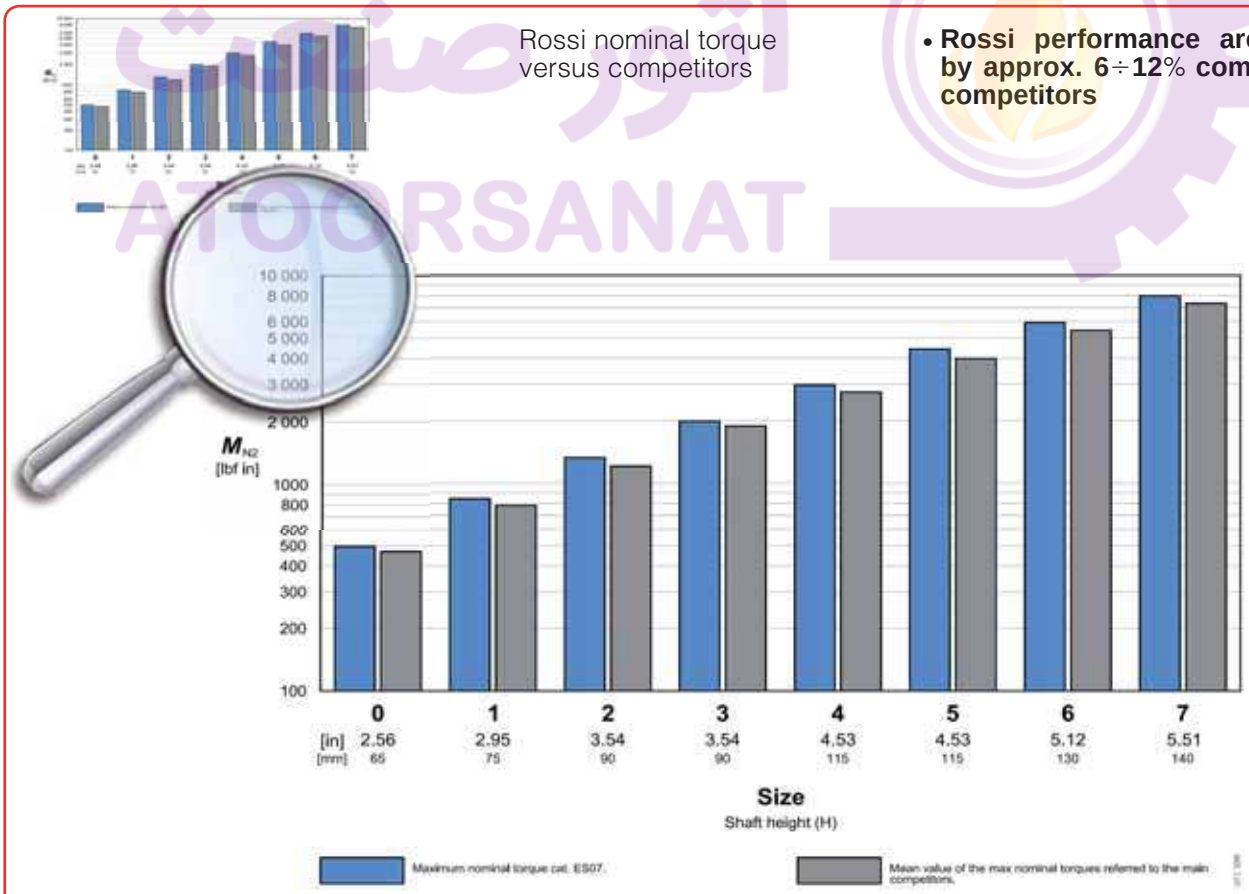	Rossi nominal torque versus competitors	• **Rossi performance are higher by approx. 6÷12% compared to competitors**

1 - Symbols, units of measurement and conversion table

Symbols and units of measurement

F_{r2}	[lbf]	radial load on low speed shaft end (OHL)
F_{a2}	[lbf]	axial load on low speed shaft end
i		transmission ratio
i_N		nominal transmission ratio
L_{WA}	[dB(A)]	sound power level
n_N	[rpm]	nominal speed of the motor
n_1	[rpm]	input speed of the gearmotor
n_2	[rpm]	output speed of the geamotor
P_N	[hp]	rated motor power
P_1	[hp]	input power of the gearmotor
P_2	[hp]	output power of the gearmotor
P_{N2}	[hp]	nominal output power of the gearmotor
ta	[s]	starting time
tb	[s]	braking time
T_N	[lbf in]	nominal torque of the motor
T_{start}	[lbf in]	starting torque of the motor
T_{max}	[lbf in]	max torque of the motor, with direct on-line start
T_{brake}	[lbf in]	braking torque setting of the motor
T_{N2}	[lbf in]	nominal output torque of the gearmotor at speed n_2
T_2	[lbf in]	output torque of the gearmotor at speed n_2
I_N	[A]	rated current of the motor
I_S	[A]	starting current of the motor
WK_L^2	[lb ft^2]	external moment of inertia (of mass; couplings, driven machine)
WK_0^2	[lb ft^2]	moment of inertia (of mass) of the motor
z	[start/h]	starting frequency
z_0	[start/h]	no-load starting frequency
φa_1	[rad]	revolution of motor shaft during acceleration
φb_1	[rad]	revolution of motor shaft during deceleration
η		gear reducer efficiency
max		max value
min		min value
1		relating to high speed shaft (input)
2		relating to low speed shaft (output)
÷		from … to
≈		approximately equal to
⩾		greater than or equal to
⩽		less than or equal to

Conversion table

Distance					
inch	[in]	=	0.0254	meter	[m]
feet	[ft]	=	0.3048	meter	[m]
Mass					
pound	[lb]	=	0.4536	kilogram	[kg]
ounce	[oz]	=	0.0283	kilogram	[kg]
Volume					
US liquid gallon	[gal]	=	3.7854	liter	[l]
Temperature					
fahrenheit degree	[°F]	=	1.8 · °C + 32	celsius degree	[°C]
Force					
pound-force	[lbf]	=	4.4482	newton	[N]
pound-force	[lbf]	=	0.4536	kilogram force	[kgf]
Power					
horse power	[hp]	=	0.7457	kilowatt	[kW]
Torque, Work					
pound-force inch	[lbf in]	=	0.1130	newton meter, joule	[N m], [J]
pound-force inch	[lbf in]	=	0.0115	kilogram-force meter	[kgf m]
pound-force foot	[lbf ft]	=	1.3560	newton meter, joule	[N m], [J]
pound-force foot	[lbf ft]	=	0.1383	kilogram-force meter	[kgf m]
Moment of inertia					
WK^2	[lb ft^2]	=	0.0421	kilogram square-meter	[kg m^2]

2 - Specifications

Maximum interchangeability (shaft height, low speed shaft end, foot dimensions and fitting holes)
Wide use of motors with mating dimensions standardized to IEC and **electrical design** according to **NEMA MG1-12**
Foot mounting integral with housing
Rigid and precise cast iron single-piece housing
Generously proportioned bearings on low speed shaft (bearings and shaft) **in order to withstand high loads on shaft end**
High manufacturing quality standard
High, reliable, **and tested performance**
Maximum (axial and transverse) **compactness;** same dimensions for **2** (2I) or **3** (3I) helical gear stages

a - Gear reducer

0	1	2	3	4	5	6	7	1)
2.56 - 65	**2.95** - 75	**3.54** - 90	**3.54** - 90	**4.53** - 115	**4.53** - 115	**5.12** - 130	**5.51** - 140	H
0.75	0.75	1	1	1.25	1.375	1.375	1.625	U
500	**850**	**1 320**	**2 000**	**3 000**	**4 500**	**6 000**	**8 00 0**	T_{N2}
360	560	1 000	1 320	1 320	1 800	1 240	2 800	F_{r2max}

1) H shaft height [in - mm]
U low speed shaft end Ø [in]
T_{N2} nominal torque [lbf in]
F_{r2max} max radial load [lbf]

Structural features

Main specifications are:
- single-piece cast iron housing 250 UNI ISO 185 with stiffening ribs and high lubricant capacity;
- **standard IEC** rear **flange for motor coupling**, integral with housing;
- cylindrical roller or ball bearings on intermediate shafts;
- ball bearings on low speed shaft generously proportioned in order to withstand high loads on low speed shaft end (which is also proportioned for the same purpose);
- pinion of final reduction stage with three bearings (sizes 2I 5 ... 7) in order to ensure the best meshing conditions (no overhung wheel, maximum rigidity and overload capacity, maximum reduction of noise level);
- first reduction stage pinion directly fitted with interference and key onto the motor shaft end;
- cylindrical helical gear pairs with **ground profile** and **modified helix angle**, for the **maximum load capacity**, **smooth** and **low-noise running**;
- **large number** of **gearmotor combinations** adopting **motors** with coupling dimensions standardized to **IEC**;
- oil-bath lubrication; all sizes are supplied **filled with synthetic oil**, providing lubrication «**for life**», and 1 plug (sizes 0 .... 5) or 2 plugs (sizes 6 and 7); sealed;
- paint: external coating in synthetic paint appropriate for resistance to normal industrial environments and suitable for the application of further coats of synthetic paints; color blue RAL 5010 DIN 1843; internal protection with epoxy paint.

Gear stages:

- 8 sizes with 2, 3 helical gear stages;
- nominal transmission ratios to R 20 series (4 ... 200);
- output speeds close to standard numbers R 20 series (5.6 ... 450 rpm);
- casehardened and hardened gears in 16 NiCr4 or 16 MnCr5 steel depending on size, according to EN 10084-98;
- helical toothed gears with **ground profile** and **modified helix angle**;
- gear load capacity calculated for tooth breakage and pitting according to ISO 6336.

Specific standards:

- nominal transmission ratios to UNI 2016 standard numbers (DIN 323-74, NF X 01.001, BS 2045-65, ISO 3-73);
- tooth profiles to UNI 6587-69 (DIN 867-86, NF E 23.011, BS 436.2-70, ISO 53-74);
- medium series fixing holes to UNI 1728-83 (DIN 69-71, NF E 27.040, BS 4186-67, ISO/R 273);
- low speed shaft diameters, square keys and tolerances according to ANSI/AGMA 9002-B04;
- mounting positions derived from CEI 2-14 (DIN EN 60034-7, IEC 34.7);
- load capacity verified according to UNI 8862, DIN 3990, AFNOR E 23-015, ISO 6336 for running time ⩾ **12 500** h.

Sound levels

The standard levels of sound power emission L_{WA} relevant to the gearmotors of this catalog, running at nominal load and speed, comply with the limits settled by VDI 2159 for gear reducers and EN 60034 for motors.

b - Electric motor

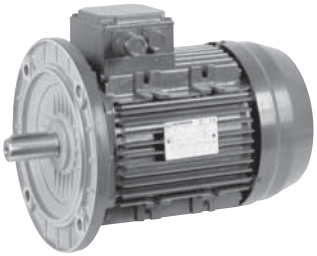

HF 56 ... 132

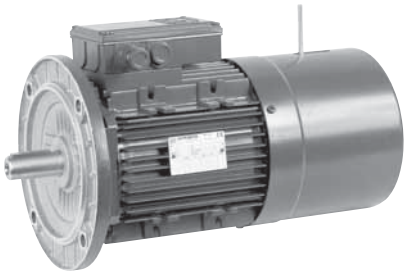

F0 63 ... 132

Asynchronous three-phase motor type HF:

- mating dimensions standardized to IEC 72-1 and electric design according to NEMA MG1-12 (see table below);
- standard efficiency, **1.15** service factor ;
- torque values according to **NEMA MG1-12** suitable for application involving high torque requirement;
- c UL us compliance available on request;
- totally enclosed fan cooled (TEFC) single-speed induction motors;
- three phase, Y460 - 60 Hz supply (230V / 460V - 60Hz on request);
- IP 55 protection, class F insulation, class B temperature rise;
- continuous duty rated power; maximum ambient temperature 104 °F (40 °C) up to 3 300 ft elevation: consult us if higher.
- inverter duty (generous electromagnetic sizing, low-loss electrical stamping, phase separator, etc.);
- designs available for every application need: flywheel, independent cooling fan, independent cooling fan and encoder, etc.;

Asynchronous three-phase brake motor type F0

- same mechanical and electric specifications as HF motor;
- particularly strong construction to withstand braking stresses; maximum reduction of noise level;
- **electromagnetic** spring loaded **brake** (braking occurs automatically when it is not supplied), with **d.c.** toroidal coil and an a.c. diodes rectifier: feeding from motor terminal block; brake can also be fed independently from the line (see UT.D 162; consult us);
- braking torque proportioned to motor torque (normally $T_{brake} \approx 2\ T_N$) step adjustable;
- high starting frequency enabled;
- rapid, precise stopping;
- hand lever for manual release with automatic return; removable lever rod.

For the full designation, technical specifications, **non-standard designs**, and further details see specific literature UT.D 162: consult us.

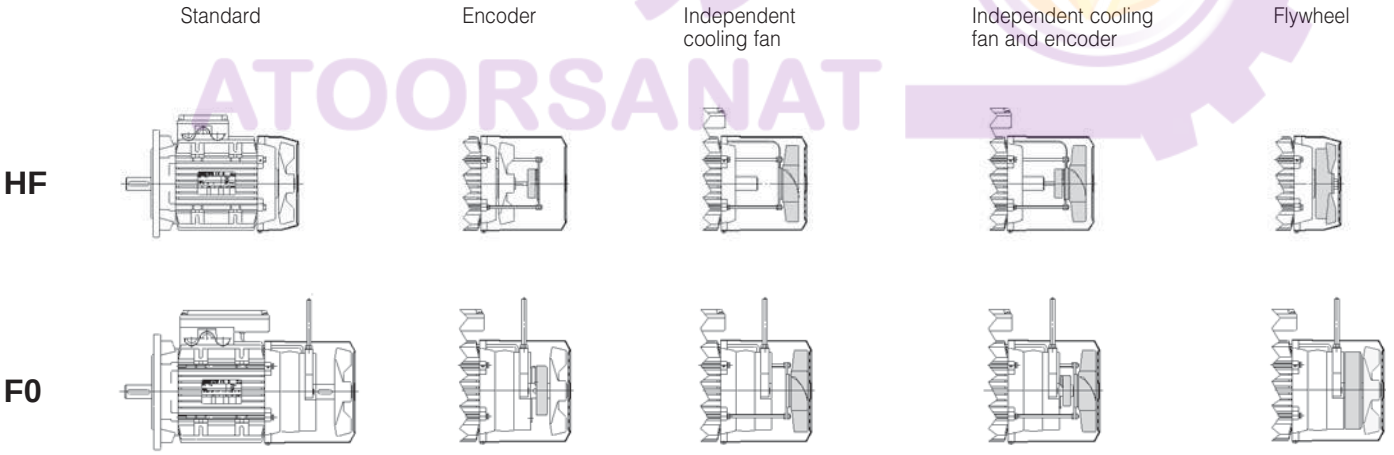

Main IEC motor mating dimensions [mm]: shaft end ∅ D x E - flange ∅ P

IEC Motor size	Motor mounting position [1]								
	BX1[2]	**B5**	BX5[2]	B5A	BX2[2]	**B5R**	B5B	**B5S**	B5C
56	–	**9 x 20 - 120**	–	–	–		–	**–**	–
63	11L x 23 - 160	**11 x 23 - 140**	–	11 x 23 - 120	–	**9 x 20 - 120**	–	**–**	–
71	14L x 30 - 200	**14 x 30 - 160**	14L x 30 - 160	14 x 30 - 140	11D x 23 - 160	**11 x 23 - 140**	11 x 23 - 120	**–**	–
80	–	**19 x 40 - 200**	–	19 x 40 - 160	14D x 30 - 200	**14 x 30 - 160**	14 x 30 - 140	**–**	–
90	–	**24 x 50 - 200**	–	–	–	**19 x 40 - 200**	19 x 40 - 160	**–**	–
100, 112	–	**28 x 60 - 250**	–	–	–	**24 x 50 - 200**	–	**19 x 40 - 200**	19 x 40 - 160
132	–	**–**	–	–	–	**28 x 60 - 250**	–	**24 x 50 - 200**	–

1) Stated in designation (see ch. 3) and in motor name plate.
2) Mounting position with shaft end not according to standard.

Electric motor technical data (HF and F0)

1 750 rpm - 60 Hz

P_N 1) hp	kW	Motor	n_N 2) rpm	T_N 2) lbf in	I_N 2) A Y460 V	cos φ 2)	η 2) % 100 %	η 2) % 75 %	T_{start}/T_N 2)	T_{max}/T_N 2)	I_S/I_N 2)	Code Letter 2)	WK_0^2 2) lb ft² HF	WK_0^2 2) lb ft² F0	z_0 2) starts/h HF	z_0 2) starts/h F0	T_{brake} lbf in	Weight 2) lb HF	Weight 2) lb F0
0.12	0.09	**56 B 4**	1 640	4.64	0.41	0.55	54.1	49.5	3.5	3.5	2.8	J	0.004	–	12 000	–	–	8	–
0.16	0.12	**63 A 4**	1 640	6.2	0.52	0.56	55,3	51.4	3.4	3.5	2.8	H	0.0060	0.0048	10 600	10 600	15	9.5	12.5
0.25	0.18	**63 B 4**	1 650	9.2	0.68	0.60	58,5	55.6	3	3.4	3.1	H	0.0075	0.0071	10 600	10 600	31	10	13
0.33	0.25	**63 C 4**	1 660	12.7	1.03	0.53	60.3	56.3	3.6	3.6	3.1	J	0.0093	0.0071	8 500	8 500	31	11.5	13
0.33	0.25	**71 A 4**	1 680	12.6	0.77	0.67	65.5	63.7	3.1	3.1	3.8	J	0.0123	0.0119	8 500	8 500	51	12.5	17.5
0.5	0.37	**71 B 4**	1 680	18.6	0.99	0.72	67.6	66.9	2.8	2.8	4.1	H	0.0160	0.0166	8 500	8 500	51	14.5	19.5
0.75	0.55	**71 C 4**	1 680	27.7	1.53	0.68	68.1	66.5	3.1	3.5	4.2	H	0.0209	0.019	6 700	6 700	67	16.5	21
1	0.75	**71 D 4**	1 680	37.7	2.05	0.68	68.1	66.5	3.2	3.4	4.5	J	0.0285	–	6 000	–	–	16	–
0.75	0.55	**80 A 4**	1 680	27.7	1.35	0.72	72.8	73.7	2.8	2.9	4.5	H	0.0255	0.0356	6 700	6 700	104	20	26
1	0.75	**80 B 4**	1 680	37.7	1.71	0.78	73.5	74.9	2.7	2.7	4.4	G	0.0348	0.0451	6 000	6 000	104	23	29
1.5	1.1	**80 C 4**	1 680	55	2.6	0.76	75.7	77	3.4	3.4	5.4	J	0.0487	0.0594	4 250	4 250	148	28	33
1.5	1.1	**90 S 4**	1 700	55	2.6	0.71	78.9	79.1	3.1	3.5	4.9	H	0.0473	0.0594	4 250	4 250	148	28	33
2	1.5	**90 L 4**	1 720	74	3.7	0.67	80.3	79.4	4	4.2	5.7	K	0.0662	0.0974	3 350	3 350	246	34	44
2.5	1.85	**90 LB 4**	1 690	93	3.95	0.77	80.5	81.5	3.6	3.6	5.8	J	0.0789	0.1045	3 350	3 350	246	37	46
3	2.2	**90 LC 4**	1 680	111	4.7	0.78	80.2	81.6	3.5	3.5	5.4	H	0.0883	0.114	2 650	2 650	246	41	51
3	2.2	**100 LA 4**	1 720	108	4.95	0.73	81	80.4	3.1	3.6	5.7	J	0.1525	0.1211	2 650	2 650	361	47	57
5	3.7	**100 LB 4**	1 740	180	8	0.7	82.6	81.1	3.6	4.1	6.6	K	0.2468	0.1639	2 650	2 650	361	67	66
5.4	4	**112 M 4**	1 730	195	8.3	0.75	84.2	84	3.3	3.8	6.4	J	0.2468	0.2304	2 120	2 120	670	67	84
7.5	5.5	**112 MC 4**	1 730	269	10.3	0.8	86.4	87.2	2.9	3.6	6.7	J	0.3433	0.2732	1 500	1 500	670	79	99
7.5	5.5	**132 S 4**	1 760	264	11.2	0.73	87.9	87.5	2.8	3.9	6.8	K	0.5766	0.5131	1 500	1 500	670	95	132
10	7.5	**132 M 4**	1 760	360	14.1	0.77	90.4	90.3	3.3	4.2	8.2	L	0.8524	0.7672	1 060	1 060	892	127	159
12.5	9.2	**132 MB 4**	1 760	442	16.9	0.79	90.3	90.6	3.2	4.1	8.2	L	0.9276	0.9287	900	900	1 334	134	168
15	11	**132 MC 4**	1 760	528	19.8	0.85	87.3	88.8	2.6	2.6	6.8	J	1.0530	1.0071	750	750	1 334	140	174

1 150 rpm - 60 Hz

P_N 1) hp	kW	Motor	n_N rpm	T_N lbf in	I_N A Y460 V	cos φ	η % 100 %	η % 75 %	T_{start}/T_N	T_{max}/T_N	I_S/I_N	Code Letter	WK_0^2 lb ft² HF	WK_0^2 lb ft² F0	z_0 starts/h HF	z_0 starts/h F0	T_{brake} lbf in	Weight lb HF	Weight lb F0
0.12	0.09	**63 A 6**	1 090	7	0.65	0.55	41	38.7	3	3	1.9	J	0.0095	0.0095	11 200	10 600	31	9	13
0.16	0.12	**63 B 6**	1 070	9.5	0.7	0.56	43.7	39.9	3.1	3.1	1.9	H	0.0095	0.0095	10 600	10 600	31	9	13
0.25	0.18	**71 A 6**	1 105	13.8	0.7	0.64	61.2	59.6	2.7	2.7	3.2	H	0.0214	0.0285	10 600	9 500	44	13	20
0.33	0.25	**71 B 6**	1 090	19.4	0.8	0.63	63.1	62.9	2.4	2.4	2.7	F	0.0261	0.0285	9 500	9 500	44	14.5	20
0.5	0.37	**71 C 6**	1 075	29.1	1.4	0.67	59.8	57.4	2.4	2.4	2.7	F	0.0285	0.0309	8 500	8 500	66	15	21
0.5	0.37	**80 A 6**	1 130	27.7	1.2	0.66	65.6	64.1	2.3	2.7	3.5	H	0.0428	0.0451	8 000	8 000	97	18	26
0.75	0.55	**80 B 6**	1 120	41.5	1.7	0.69	65.3	63.7	2.4	2.6	3.4	G	0.0546	0.057	7 500	7 500	142	20	29
1	0.75	**80 C 6**	1 120	57	2	0.73	70.9	68.5	2.4	2.6	3.8	G	0.076	0.0784	6 000	6 000	142	25	33
1	0.75	**90 S 6**	1 120	57	2	0.73	70.9	68.5	2.4	2.6	3.8	G	0.076	0.0784	6 000	6 000	142	25	33
1.5	1.1	**90 L 6**	1 115	83	2.8	0.74	72.3	71.9	2.6	2.6	4.2	G	0.1116	0.1188	4 500	4 500	239	35	49
2	1.5	**90 LC 6**	1 105	115	4.4	0.70	70.2	69.8	2.8	3.8	3.8	G	0.1211	0.1306	4 250	4 250	239	37	51
2	1.5	**100 LA 6**	1 150	110	3.5	0.70	78.1	77.4	2.9	3.2	5.3	J	0.2399	0.2470	3 000	3 000	354	51	66
2.5	1.85	**100 LB 6**	1 150	136	4.3	0.75	77.8	76.4	2.8	2.9	5.4	J	0.2732	0.2803	2 650	2 650	354	57	71
3	2.2	**112 M 6**	1 155	161	5.4	0.70	78.7	77.1	3.2	3.3	5.8	K	0.3040	0.3373	2 360	2 360	443	66	84
5.4	4	**132 M 6**	1 160	291	9	0.72	83.7	82.8	3.2	3.7	6.6	K	0.6841	0.7672	1 180	1 180	885	132	159
7.5	5.5	**132 MB 6**	1 150	401	12.5	0.76	83.1	82.6	2.9	3.2	6.1	J	0.8432	0.9287	1 060	1 060	885	141	168

1) **Continuous duty** power rating with **1.15** service factor and three-phase supply **460 V - 60 Hz**.
2) Values **valid for** 4 poles **standard motors**, without brake, in mounting positions B5, B5R, B14, B14R; in any other case see specific literature (UT.D 162) or consult us.

For the full designation, technical specifications, **non-standard designs**, and further details see specific literature UT.D 162: consult us.

3 - Designation

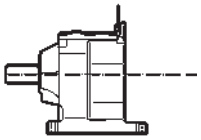

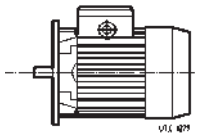

MR 3I 5 P C 3 A - F0 90S 4 265.460 B5 / 54,3

MOTOR MOUNTING POSITION (ch. 2b and 9):	**...**	
VOLTAGE [V]:	**265.460**	Y460 V - 60 Hz
NUMBER OF POLES:	**4, 6**	
MOTOR SIZE:	**56B ... 132MC**	
MOTOR:	(HF)	asynchronous three-phase (**omitted from designation**)
	F0	with d.c. brake
	...	(see UT.D 162)
GEARMOTOR OUTPUT SPEED [rpm]		

DESIGN	**A**	
MODEL:	**3**	coaxial
SHAFT POSITION:	**C**	
MOUNTING:	**P**	foot
SIZE:	**0 ... 7**	
GEAR STAGE:	**2I**	2 helical gear stage
	3I	3 helical gear stage
MACHINE:	**MR**	gearmotor

In case of:

mounting position differing from B3 (see ch. 4):
complete designation stating «**mounting position ...** »
MR 3I 5 PC3A – 71A 4 265.460 B5/13.9
mounting position B8;

terminal box position differing from 0 (see ch. 4):
complete designation stating «**terminal box position ...** »
MR 3I 5 PC3A – 71A 4 265.460 B5/13.9
terminal box position 2;

brake motor:
insert the letters **F0** before motor size
MR 3I 5 PC3A – **F0** 71A 4 265.460 B5/13.9;

motor supplied by the Buyer[1]:
omit voltage and add «**motor supplied by us**»
MR 3I 5 PC3A - 71A 4 **...** B5/13.9
motor supplied by us;

gearmotor without motor:
omit voltage and add «**without motor**»
MR 3I 5 PC3A - 71A 4 **...** B5/13.9
without motor

1) The motor supplied by the Buyer must be with mating surfaces machined under «standard» rating (IEC 72-1) at least and is to be sent carriage and expenses paid to our factory for fitting to the gear reducer.

4 - Mounting positions and lubrication

Mounting positions

Unless otherwise stated, gearmotors are supplied in mounting position **B3** which, being standard, is **omitted** from the designation.

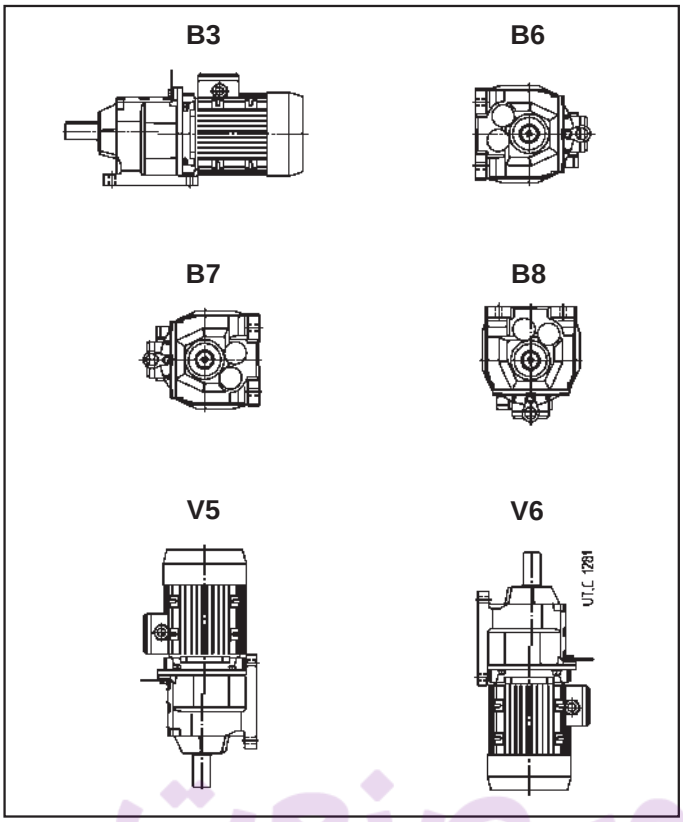

Terminal box position

Unless otherwise stated, gearmotors are supplied with motor terminal box in position 0, as stated in the figure below. On request, positions 1 and 2 are available: complete the designation stating «**terminal box position 1** or **2**» (according to figure below).

Cable gland can be fitted in a position different from the one given in the figure (at Buyer's care)

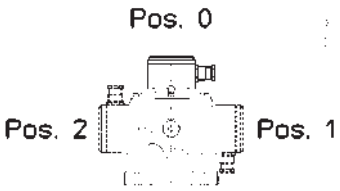

Lubrication

Gear pairs and bearings are oil-bath or splash lubricated.

Gearmotors are supplied **filled with synthetic oil** (KLÜBER Klübersynth GH 6-220, MOBIL Glygoyle 30, SHELL Tivela S 220) providing lubrication «**for life**» – assuming pollution-free surroundings. Ambient temperature range 32 ÷ 104 °F (0 ÷ 40 °C) with peaks of -4 °F (-20 °C) and +122 °F (+50 °C).

The mounting position ordered affect the quantity of lubricant which the gear reducer is filled with before delivering as well as possible bearings with independent lubrication.

Important: be sure that the gearmotor is installed as per mounting position ordered and stated on the name plate. If the gearmotor is installed in a **different mounting position**, verify, according to the values stated in the table, that the **oil quantity** doesn't **change**; if so, adjust it accordingly. Moreover, **V5** and **V6** vertical mounting positions need the upper bearings to be lubricated **with special grease**.

Seal rings: duration depends on several factors such as dragging speed, temperature, ambient conditions, etc.; as a rough guide it can vary from 3 150 to 12 500 h.

Size	Oil quantities [gal]		
	B3	**B6, B7, B8, V6**	**V5**
0	0.05	0.11	0.11
1	0.11	0.16	0.18
2	0.16	0.21	0.26
3	0.16	0.21	0.26
4	0.32	0.45	0.53
5	0.32	0.45	0.53
6	0.5	0.74	0.87
7	0.61	0.85	1

Plug position

Gearmotors are provided with 1 (sizes 0 ... 5) or 2 (sizes 6 and 7) light alloy plugs positioned as per figure below.

Attention! Before loosening the plugs wait until gear reducer has become cold.

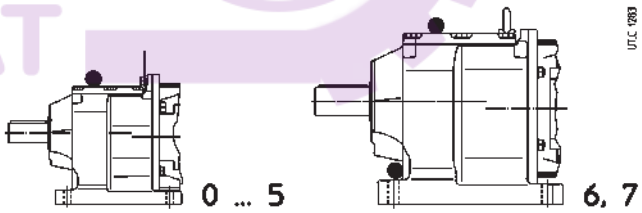

5 - Service factor *fs*

Service factor *fs* takes into account the different running conditions (nature of load, running time, frequency of starting, other considerations) to which the gearmotor can be subjected and which must be referred to when performing calculations of gearmotor selection and verification.

Two equivalent methods are here proposed to determine the minimum service factor required by applications:

- **mass acceleration method**: considering the overloads deriving from the system inertia and running conditions (starts per hour, hours per day, expected life);
- **AGMA service factor**: according to AGMA standards (although the gearmotors of the present catalog are not strictly AGMA rated)

Mass acceleration method

For an analitical determination of the required service factor (especially considering the running hours), proceed as stated below and/or consult us

– Calculate the **mass acceleration factor** m_J:

$$m_J = \frac{WK_R^2}{WK_0^2}$$

where:

WK_R^2 [lb ft²] is the external moment of inertia (of mass; couplings, driven machine)

WK_L^2 reflected to the motor shaft:

$$WK_R^2 = WK_L^2 \cdot \left(\frac{n_2}{n_N}\right)^2$$

-

WK_0^2 [lb ft²] is the moment of inertia (of mass) of motor (see ch. 2b);

n_2 [rpm] is output speed of the gearmotor;

n_N [rpm] is nominal speed of the motor (see ch. 2b). As a guideline consider: n_N = 1 750 rpm for 4 poles and n_N = 1 150 rpm for 6 poles;

– Select the proper **overload class** according to the acceleration mass factor m_J:

$m_J \leqslant 0.3$ (uniform load) load classification **I**
$m_J \leqslant 3$ (moderate overloads) load classification **II**
$m_J \leqslant 10$ (heavy overloads) load classification **III**

For m_J values larger than **10**, in presence of high values of backlash for kinematic chain, a specific evalutation has to be carried out: consult us.

– From the **diagram**, according to the overload class, the running time and the starting frequency z, read off the minimum service factor required.

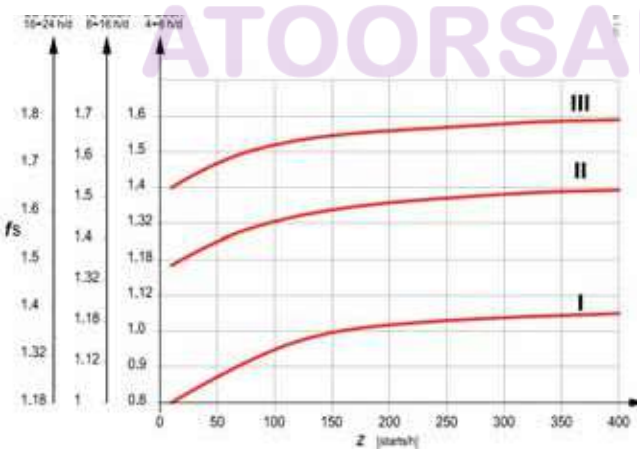

– Whenever a **higher degree of reliability** is required (particularly difficult maintenance conditions, key importance of gearmotor to production, personnel safety, etc.) multiply *fs* by **1.25 ÷ 1.4**.

AGMA Service factor

Service factor

Before a gearmotor is selected, an application class number, which represents the normal relationship between gear unit rating and the maximum potential transmitted power, shall be determined.

The application class number and related service factor include the combined effects of varying duty cycles, reliability, expected performance, plus magnitude and frequency of peak load occurrences in an empirically determined single factor.

The application class numbers are **I**, **II**, and **III** (see AGMA tables for application classification). Their relationship to service factor is shown below (although the gearmotors of the present catalog are not strictly AGMA rated, nevertheless the following table can be used to select a proper service factor as well):

Application class number	*fs* ⩾	Running condition
I	**1**	Steady loads not exceeding the nominal specified input power, 8-10 hours / day running
II	**1.4**	Steady loads not exceeding the nominal specified input power and 24 hours / day running. Moderate overloads and 8-10 hours / day running.
III	**2**	Moderate overloads and 24 hours / day running. Heavy overloads and 8-10 hours / day running.

Caution: in case of high reliability degree requirements (eg.: application involving risks for personnel safety) or in presence of high inertia loads or high starts/stops frequency, consult us.

6 - Selection

Determining the gearmotor size

- Make available all necessary data: required output power P_2 of gearmotor, speed n_2, running conditions (nature of load, running time, frequency of starting z, other considerations) with reference to ch. 5.
- Determine service factor fs on the basis of running conditions (ch. 5).
- Select the gearmotor size on the basis of n_2, fs and of a power P_1 greater than or equal to P_2 (ch. 8).

If power P_2 required is the result of a precise calculation, the gearmotor should be selected on the basis of a power P_1 equal to or greater than P_2 / η, where $\eta = 0{,}96 \div 0{,}94$ is gear reducer efficiency (ch. 10). When for reasons of motor standardization, power P_1 available in catalog is much greater than the power P_2 required, the gearmotor can be selected on the basis of a lower service factor

$\left(fs \cdot \frac{P_2 \text{ required}}{P_1 \text{ available}}\right)$ provided it is certain that this excess power available will never be required and frequency of starting z is low enough not to affect service factor (ch. 5).

Calculations can also be made on the basis of torque instead of power; this method is even preferable for low n_2 values.

Verifications

- Verify possible radial load F_{r2} referring to directions and values given in ch. 7 and 8.
- For the motor, verify frequency of starting z when higher than that normally permissible, referring to directions and values given in ch. 2b and 10; this will normally be required for brake motors only.
- When a load chart is available, and/or there are overloads – due to starting on full load (especially with high inertias and low transmission ratios), braking, shocks, gear reducers in which the low speed shaft becomes driving member due to driven machine inertia, or other static or dynamic causes – verify that the maximum torque peak (ch. 10) is always less than $2 \cdot T_{N2}$ ($T_{N2} = T_2 \cdot fs$, see ch. 8); if it is higher or cannot be evaluated in the above instances, install suitable safety devices so that $2 \cdot T_{N2}$ will never be exceeded.

Considerations on selection

Motor power

Taking into account the efficiency of the gear reducer, and other drives – if any – motor power is to be as near as possible to the power rating required by the driven machine: accurate calculation is therefore recommended.

The power required by the machine can be calculated, seeing that it is related directly to the power-requirement of the work to be carried out, to friction (starting, sliding of rolling friction) and inertia (particularly when mass and/or acceleration or deceleration are considerable). It can also be determined experimentally on the basis of tests, comparisons with existing applications, or readings taken with amperometers or wattmeters.

An oversized motor would involve: a greater starting current and consequently larger fuses and heavier cable; a higher running cost as power factor (cos φ) and efficiency would suffer; greater stress on the drive, causing danger of mechanical failure, drive being normally proportionate to the power rating required by the machine, not to motor power.

Only high values of ambient temperature, altitude, frequency of starting or other particular conditions require an increase in motor power.

7 - Radial loads (overhung loads OHL) F_{r2} [lbf] on low speed shaft end

Radial loads generated on the shaft end by a drive connecting gearmotor and machine must be less than or equal to those given in ch. 8.

Normally, radial loads on low speed shaft ends are considerable: in fact there is a tendency to connect the gear reducer to the machine by means of a transmission with high transmission ratio (economizing on the gear reducer) and with small diameters (economizing on the drive, and for requirements dictated by overall dimensions).

Bearing life and wear (which also affects gears unfavorably) and low speed shaft strength, clearly impose limits on permissible radial load.

Permissible radial loads are given in the tables of ch. 8 and are referred to gearmotor's output speed n_2 and torque T_2, considering overhung load acting on center line of low speed shaft end, in the most unfavorable direction of rotation and angular position of load.

If the exact direction of rotation and angular position of load are known, an increase of permissible radial load may be achieved. If necessary, consult us for the verification of specific instance.

In case of radial load acting in position different from center line of low speed shaft end, i.e. operating at a distance different from 0,5 · E, the permissible radial load must be recalculated according to the following formula, verifying not to exceed the max value F_{r2max} stated in the table:

$$F_{r2}' = F_{r2} \cdot \frac{E/2 + k}{x + k} \quad \text{[lbf]}$$

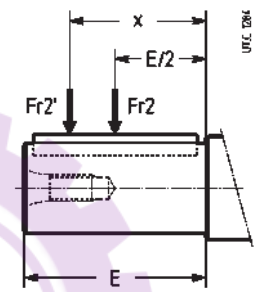

Where:

F_{r2}' [lbf] is the permissible radial load acting at the distance x from shaft shoulder;

F_{r2} [lbf] is the permissible radial load acting on center line of low speed shaft end (see ch.8);

E [in] is shaft end length (see table);

k [in] is given in the table;

x [in] is the distance between the shaft shoulder and the load application point.

		Gear reducer size							
		0	**1**	**2**	**3**	**4**	**5**	**6**	**7**
E	[in]	1.57	1.57	1.97	1.97	2.36	2.76	2.76	3.15
k	[in]	1.52	2.32	3.11	3.17	3.77	3.94	4.55	4.72
F_{r2max}	[lbf]	360	560	1 000	1 320	1 320	1 800	2 240	2 800

An **axial load** of up 0,2 times the value in the tables of ch. 8 is permissible, simultaneously with the radial load.

In case of no radial loads an axial load (not misaligned) of up 0,5 times the value in the tables of ch. 8, is permissible.

If exceeded and/or for **misaligned** axial loads, consult us.

Radial load F_{r2} for most common drives has the following value:

$$F_{r2} = k \cdot \frac{2 \cdot T_2}{d} \quad \text{[lbf]}$$

where:

T_2 [lbf in] is the torque required by the gearmotor low speed shaft;

d [in] is the pitch diameter;

k is a coefficient which assumes different values according to transmission type:

- k = 1 for chain drive (lifting in general);
- k = 1.5 for timing belt drive;
- k = 2.5 for V-belt drive;
- k = 1.1 for spur gear pair drive;
- k = 3.55 for friction wheel drive.

Motor power P_1 hp	Output speed n_2 rpm	Output torque T_2 lbf in	OHL F_{r2} lbf	Ratio i	Service factor fs		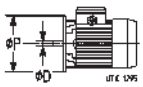	ØD mm	ØP mm	Weight ≈ HF lb	Weight ≈ F0 lb
0.12	**8.04**	940	1 320	136	1.6	**MR 3I 3**	**- 63 A 6**	**B5**	**11 × 140**	32	36
	8.9	850	1 320	123	1.9						
	10	755	1 320	109	2.36						
	11.1	680	1 320	98	3						
	11.6	654	1 320	94.3	2.65						
	12.8	589	1 320	84.9	3.35						
	8.65	874	1 000	126	1.25	**MR 3I 2**	**- 63 A 6**	**B5**	**11 × 140**	31	35
	9.58	789	1 000	114	1.6						
	10.8	702	1 000	101	1.9						
	12.4	608	950	87.7	2.24						
	13.8	547	1 000	78.9	2.36						
	15.3	495	1 000	71.4	2.65						
	16.8	451	1 000	65	3						
	18.3	413	950	59.5	3.15						
	22.9	330	950	47.5	4						
	15	504	450	72.7	1.6	**MR 3I 1**	**- 63 A 6**	**B5**	**11 × 140**	24	28
	16.8	450	425	64.9	1.9						
	18.7	405	400	58.4	2.12						
	20.6	367	425	52.9	2.24						
	22.6	334	425	48.1	2.5						
	27.9	271	425	39	3.15						
	15.7	482	300	69.5	0.95	**MR 3I 0**	**- 63 A 6**	B5R	9 × 120	22	26
	17.4	434	335	62.6	1.12						
	18.7	404	335	58.3	1.25						
	21	360	315	51.8	1.4						
	23.5	322	315	46.4	1.5						
	21.6	350	265	77.7	1.18	**MR 3I 0**	**- 56 B 4**	**B5**	**9 × 120**	21	–
	24.2	313	265	69.5	1.5						
	26.8	282	250	62.6	1.8						
	28.8	262	250	58.3	1.9						
	32.4	233	236	51.8	2.12						
	36.2	209	250	46.4	2.36						
	42.5	178	250	39.5	2.8						
	45.7	166	250	36.8	3						
	51.4	147	250	32.7	3.35						
	57.4	132	236	29.3	3.75						
	63.6	119	236	26.4	4.25						
	75.2	101	236	22.3	5						
	82.2	92	236	20.4	5.3						
	108	70	190	15.5	5.6	**MR 2I 0**	**- 56 B 4**	**B5**	**9 × 120**	20	–
	121	63	190	13.9	6.7						
	134	56	190	12.5	8.5						
	144	52	190	11.7	9.5						
	162	46.7	190	10.4	10.6						
	181	41.8	190	9.28	11.8						
	201	37.7	170	8.37	11.8						
	237	31.9	150	7.08	11.8						
	259	29.2	132	6.48	11.8						
	290	26.1	132	5.79	11.8						
	333	22.7	125	5.05	11.8						
0.16	**6.06**	1 665	1 700	178	2	**MR 3I 5**	**- 63 B 6**	BX1	11 × 160	55	59
	6.92	1 458	1 600	156	2.8						
	7.75	1 301	1 700	139	3.35						
	8.62	1 171	1 600	125	3.35						
	9.42	1 070	1 320	178	3.15	**MR 3I 5**	**- 63 A 4**	BX1	11 × 160	55	59
	5.96	1 693	1 320	181	1.4	**MR 3I 4**	**- 63 B 6**	BX1	11 × 160	53	57
	6.59	1 530	1 320	164	1.7						
	7.47	1 350	1 320	145	2.12						
	8.39	1 202	1 320	129	2.5						
	9.26	1 088	1 250	181	2.12	**MR 3I 4**	**- 63 A 4**	BX1	11 × 160	52	56
	10.3	983	1 320	164	2.65						
	11.6	868	1 320	145	3.35						
	13	773	1 320	129	3.75						
	14.5	694	1 320	116	4.25						
	7.97	1 266	1 320	136	1.18	**MR 3I 3**	**- 63 B 6**	**B5**	**11 × 140**	32	36
	8.82	1 144	1 320	123	1.4						
	9.92	1 016	1 320	109	1.7						
	11	915	1 320	98	2.12						
	11.5	881	1 320	94.3	2						
	12.7	793	1 320	84.9	2.5						

Motor power P_1 hp	Output speed n_2 rpm	Output torque T_2 lbf in	OHL F_{r2} lbf	Ratio i	Service factor fs							ØD mm	ØP mm	Weight ≈ HF lb	Weight ≈ F0 lb
0.16	**12.4**	814	1 060	136	1.8	**MR 3I 3**	**-**	**63**	**A**	**4**	**B5**	**11**	× **140**	31	35
	13.7	735	1 060	123	2.24										
	15.4	653	1 180	109	2.65										
	17.1	588	1 250	98	3.35										
	9.49	1 062	1 000	114	1.18	**MR 3I 2**	**-**	**63**	**B**	**6**	**B5**	**11**	× **140**	31	35
	10.7	945	1 000	101	1.4										
	12.3	819	1 000	87.7	1.6										
	13.7	736	1 000	78.9	1.8										
	15.1	667	1 000	71.4	2										
	13.3	756	900	126	1.5	**MR 3I 2**	**-**	**63**	**A**	**4**	**B5**	**11**	× **140**	31	35
	14.8	683	850	114	1.8										
	16.6	607	850	101	2.24										
	19.2	526	850	87.7	2.5										
	21.3	473	850	78.9	2.8										
	23.5	429	850	71.4	3.15										
	25.8	390	850	65	3.35										
	28.3	357	850	59.5	3.75										
	16.6	606	450	64.9	1.4	**MR 3I 1**	**-**	**63**	**B**	**6**	**B5**	**11**	× **140**	24	28
	18.5	545	450	58.4	1.5										
	20.4	494	425	52.9	1.7										
	22.4	449	425	48.1	1.9										
	20	505	375	84.1	1.4	**MR 3I 1**	**-**	**63**	**A**	**4**	**B5**	**11**	× **140**	23	27
	23.1	436	355	72.7	1.8										
	25.9	389	335	64.9	2.12										
	28.8	350	355	58.4	2.36										
	31.8	317	355	52.9	2.65										
	34.9	289	355	48.1	3										
	43.1	234	375	39	3.55										
	47.9	211	375	35.1	4										
	52.9	191	375	31.8	4.5										
	28.8	350	265	58.3	1.4	**MR 3I 0**	**-**	**63**	**A**	**4**	B5R	9	× 120	22	26
	32.4	311	265	51.8	1.6										
	36.2	279	250	46.4	1.8										
	42.5	237	236	39.5	2.12										
	45.7	221	236	36.8	2.24										
	51.4	196	236	32.7	2.5										
	57.4	176	224	29.3	2.8										
	63.6	158	224	26.4	3.15										
	75.2	134	224	22.3	3.75										
	82.2	123	224	20.4	4										
	86.2	117	212	12.5	4	**MR 2I 0**	**-**	**63**	**B**	**6**	B5R	9	× 120	22	26
	92.6	109	212	11.7	4.5										
	104	97	200	10.4	5										
	108	93	190	15.5	4.25	**MR 2I 0**	**-**	**63**	**A**	**4**	B5R	9	× 120	21	25
	121	83	190	13.9	5.3										
	134	75	190	12.5	6.3										
	144	70	190	11.7	7.1										
	162	62	180	10.4	8										
	181	56	180	9.28	9										
	201	50	170	8.37	9										
	237	42.5	150	7.08	9										
	259	38.9	132	6.48	9										
	290	34.8	125	5.79	9										
	333	30.3	118	5.05	9										
	397	25.4	125	4.23	11.2	**MR 2I 0**	**-**	**63**	**A**	**4**	B5A	11	× 120	21	25
	456	22.1	118	3.69	11.2										
0.25	**5.73**	2 752	2 800	194	2.36	**MR 3I 7**	**-**	**71**	**A**	**6**	BX1	14	× 200	98	105
	6.34	2 486	2 800	175	3										
	5.53	2 849	2 240	201	1.6	**MR 3I 6**	**-**	**71**	**A**	**6**	BX5	14	× 160	89	96
	6.18	2 550	2 000	180	2.12										
	7.08	2 226	2 240	157	2.65										
	7.94	1 983	2 240	140	3										
	8.85	1 781	2 240	125	3.35										
	6.23	2 531	1 800	178	1.32	**MR 3I 5**	**-**	**71**	**A**	**6**	BX2	11	× 160	59	66
	7.11	2 216	1 600	156	1.8										
	7.97	1 977	1 600	139	2.12										
	8.85	1 779	1 600	125	2.24										
	7.89	1 996	1 600	141	1.7	**MR 3I 5**	**-**	**71**	**A**	**6**	**B5**	**14**	× **160**	59	66
	9.02	1 748	1 600	123	2.24										
	10.1	1 559	1 600	110	2.8										

Motor power P_1 hp	Output speed n_2 rpm	Output torque T_2 lbf in	OHL F_{r2} lbf	Ratio i	Service factor fs		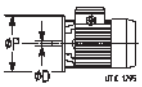	ØD mm	ØP mm	Weight ≈ HF lb	Weight ≈ F0 lb
0.25	**9.42**	1 672	1 400	178	2	**MR 3I 5**	**- 63 B 4**	BX1	11 × 160	55	59
	10.8	1 464	1 400	156	2.8						
	12.1	1 306	1 400	139	3.15						
	13.4	1 176	1 400	125	3.35						
	6.78	2 325	1 320	164	1.12	**MR 3I 4**	**- 71 A 6**	BX2	11 × 160	57	64
	7.68	2 052	1 320	145	1.4						
	8.62	1 828	1 320	129	1.6						
	7.76	2 030	1 320	143	1.18	**MR 3I 4**	**- 71 A 6**	**B5**	**14 × 160**	57	64
	8.59	1 834	1 320	129	1.4						
	9.26	1 701	1 250	181	1.4	**MR 3I 4**	**- 63 B 4**	BX1	11 × 160	52	56
	10.3	1 536	1 320	164	1.7						
	11.6	1 356	1 320	145	2.12						
	13	1 208	1 320	129	2.5						
	14.5	1 085	1 320	116	2.8						
	16.2	970	1 320	103	3						
	18.1	871	1 320	92.9	3.35						
	9.06	1 739	1 180	123	0.95	**MR 3I 3**	**- 71 A 6**	B5R	11 × 140	36	43
	10.2	1 545	1 320	109	1.12						
	11.3	1 391	1 320	98	1.4						
	11.8	1 339	1 320	94.3	1.32						
	11.3	1 394	1 320	98.2	1.06	**MR 3I 3**	**- 71 A 6**	**B5**	**14 × 160**	36	43
	12.5	1 260	1 320	88.8	1.32						
	12.4	1 271	1 120	136	1.12	**MR 3I 3**	**- 63 B 4**	**B5**	**11 × 140**	32	36
	13.7	1 149	1 120	123	1.4						
	15.4	1 021	1 120	109	1.7						
	17.1	919	1 120	98	2.12						
	17.8	885	1 180	94.3	2						
	19.8	797	1 180	84.9	2.5						
	23.5	671	1 250	71.5	3						
	25.6	614	1 250	65.5	3.15						
	29.6	533	1 180	56.8	3.35						
	13.3	1 182	800	126	0.95	**MR 3I 2**	**- 63 B 4**	**B5**	**11 × 140**	31	35
	14.8	1 067	950	114	1.18						
	16.6	949	950	101	1.4						
	19.2	822	950	87.7	1.6						
	21.3	740	900	78.9	1.8						
	23.5	670	900	71.4	2						
	25.8	610	800	65	2.12						
	28.3	558	800	59.5	2.36						
	35.4	446	800	47.5	3						
	39	404	800	43	3.35						
	42.9	367	800	39.2	3.55						
	58.1	271	630	28.9	4	**MR 2I 2**	**- 63 B 4**	BX1	11 × 160	31	35
	64.4	245	670	26.1	4.75						
	72.4	218	710	23.2	6						
	19	828	450	58.4	1	**MR 3I 1**	**- 71 A 6**	B5R	11 × 140	28	35
	21	750	450	52.9	1.12						
	23.1	682	375	72.7	1.18	**MR 3I 1**	**- 63 B 4**	**B5**	**11 × 140**	24	28
	25.9	608	375	64.9	1.4						
	28.8	547	375	58.4	1.5						
	31.8	496	355	52.9	1.7						
	34.9	451	355	48.1	1.9						
	43.1	366	355	39	2.24						
	47.9	329	355	35.1	2.5						
	52.9	298	355	31.8	2.8						
	58	271	375	28.9	3.15						
	69	228	355	24.3	3.75						
	75.4	209	335	22.3	3.15	**MR 2I 1**	**- 63 B 4**	**B5**	**11 × 140**	23	27
	87.3	181	315	19.3	4						
	97.8	161	315	17.2	5						
	36.2	435	265	46.4	1.12	**MR 3I 0**	**- 63 B 4**	B5R	9 × 120	22	26
	42.5	370	280	39.5	1.32						
	45.7	345	250	36.8	1.4						
	51.4	307	265	32.7	1.6						
	57.4	275	224	29.3	1.8						
	63.6	248	224	26.4	2						
	75.2	209	200	22.3	2.36						
	82.2	192	212	20.4	2.65						

Motor power P_1 hp	Output speed n_2 rpm	Output torque T_2 lbf in	OHL F_{r2} lbf	Ratio i	Service factor fs		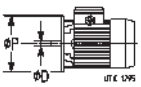	ØD mm	ØP mm	Weight ≈ HF lb	Weight ≈ F0 lb
0.25	**108**	146	180	15.5	2.65	**MR 2I 0**	**- 63 B 4**	B5R	9 × 120	22	26
	121	130	180	13.9	3.35						
	134	117	180	12.5	4						
	144	109	180	11.7	4.5						
	162	97	170	10.4	5						
	181	87	170	9.28	5.6						
	201	79	160	8.37	5.6						
	237	66	140	7.08	5.6						
	259	61	125	6.48	5.6						
	290	54	125	5.79	5.6						
	333	47.3	118	5.05	5.6						
	397	39.7	118	4.23	7.5	**MR 2I 0**	**- 63 B 4**	B5A	11 × 120	22	26
	456	34.6	112	3.69	7.5						
0.33	**5.62**	3 700	2 800	194	1.7	**MR 3I 7**	**- 71 B 6**	BX1	14 × 200	99	105
	6.22	3 341	2 800	175	2.24						
	6.68	3 112	2 800	163	2.5						
	7.35	2 829	2 800	148	2.8						
	8.82	2 358	2 500	194	2.8	**MR 3I 7**	**- 71 A 4**	BX1	14 × 200	96	102
	9.77	2 130	2 800	175	3.35						
	5.43	3 830	2 240	201	1.25	**MR 3I 6**	**- 71 B 6**	BX5	14 × 160	90	96
	6.07	3 427	2 240	180	1.5						
	6.95	2 992	2 240	157	1.9						
	7.8	2 666	2 240	140	2.24						
	8.69	2 394	2 240	125	2.5						
	9.79	2 125	2 240	111	2.8						
	10.9	1 908	2 240	100	3.15						
	8.52	2 441	1 800	201	1.9	**MR 3I 6**	**- 71 A 4**	BX5	14 × 160	87	93
	9.52	2 185	1 800	180	2.5						
	10.9	1 907	1 900	157	3						
	12.2	1 699	2 000	140	3.55						
	6.11	3 402	1 800	178	1	**MR 3I 5**	**- 71 B 6**	BX2	11 × 160	60	66
	6.98	2 979	1 800	156	1.32						
	7.83	2 658	1 800	139	1.6						
	7.75	2 683	1 800	141	1.25	**MR 3I 5**	**- 71 B 6**	**B5**	**14 × 160**	60	66
	8.85	2 349	1 600	123	1.7						
	9.92	2 096	1 700	110	2						
	11	1 887	1 600	98.9	2.12						
	9.59	2 168	1 500	178	1.5	**MR 3I 5**	**- 71 A 4**	BX2	11 × 160	57	63
	11	1 899	1 320	156	2.12						
	12.3	1 694	1 400	139	2.5						
	12.2	1 710	1 400	141	1.9	**MR 3I 5**	**- 71 A 4**	**B5**	**14 × 160**	57	63
	13.9	1 497	1 320	123	2.65						
	15.6	1 336	1 400	110	3.15						
	17.3	1 203	1 400	98.9	3.35						
	7.54	2 758	1 320	145	1.06	**MR 3I 4**	**- 71 B 6**	BX2	11 × 160	58	64
	8.46	2 457	1 320	129	1.18						
	8.44	2 465	1 320	129	1.06	**MR 3I 4**	**- 71 B 6**	**B5**	**14 × 160**	58	64
	9.56	2 175	1 320	114	1.32						
	10.7	1 938	1 320	102	1.5						
	9.43	2 206	1 120	181	1.06	**MR 3I 4**	**- 71 A 4**	BX2	11 × 160	55	61
	10.4	1 992	1 320	164	1.32						
	11.8	1 758	1 320	145	1.6						
	13.3	1 566	1 320	129	1.9						
	12	1 739	1 320	143	1.32	**MR 3I 4**	**- 71 A 4**	**B5**	**14 × 160**	55	61
	13.2	1 571	1 250	129	1.7						
	15	1 387	1 320	114	2.12						
	16.8	1 235	1 320	102	2.36						
	18.7	1 113	1 320	91.5	2.65						
	21	992	1 320	81.6	3						
	22.4	929	1 320	76.4	3.15						
	25	831	1 320	68.3	3.55						
	11.1	1 870	1 320	98	1.06	**MR 3I 3**	**- 71 B 6**	B5R	11 × 140	37	43
	11.6	1 800	1 250	94.3	1						
	12.3	1 693	1 250	88.8	0.95	**MR 3I 3**	**- 71 B 6**	**B5**	**14 × 160**	37	43
	13.6	1 526	1 060	123	1.06	**MR 3I 3**	**- 63 C 4**	B5*	11 × 140	32	36
	15.3	1 355	1 180	109	1.32						
	17	1 221	1 250	98	1.6						

***** Power or motor power-to-size correspondence not according to standard.

Motor power P_1 hp	Output speed n_2 rpm	Output torque T_2 lbf in	OHL F_{r2} lbf	Ratio i	Service factor fs							ØD mm	ØP mm	Weight ≈ HF lb	Weight ≈ F0 lb
0.33	**17.4**	1 194	1 120	98.2	1.25	**MR 3I 3**	**-**	**71 A**	**4**	**B5**		**14**	**160**	34	40
	19.3	1 079	1 120	88.8	1.5										
	21.7	959	1 120	78.8	1.8										
	24.1	864	1 180	71	2.24										
	25	831	1 060	68.3	2.12										
	27.8	748	1 180	61.5	2.65										
	33	630	1 250	51.8	3.15										
	36	577	1 250	47.5	3.35										
	16.5	1 260	900	101	1.06	**MR 3I 2**	**-**	**63 C**	**4**	B5*		11	140	31	35
	18.4	1 133	950	91	1.18										
	20.7	1002	950	82.4	1.25	**MR 3I 2**	**-**	**71 A**	**4**	**B5**		**14**	**160**	33	39
	23.3	892	950	73.3	1.5										
	26.9	773	850	63.5	1.7										
	29.9	695	850	57.1	1.9										
	33.1	629	750	51.7	2.12										
	36.3	573	750	47.1	2.36										
	44.7	466	750	38.3	2.8										
	49.7	419	750	34.4	3.15										
	54.9	379	750	31.2	3.55										
	60.3	345	710	28.4	3.75										
	57.8	360	630	28.9	3	**MR 2I 2**	**-**	**63 C**	**4**	BX1		11	160	31	35
	64	325	670	26.1	3.55										
	71.9	289	670	23.2	4.5										
	80	260	710	20.9	5										
	75	277	600	22.8	3.75	**MR 2I 2**	**-**	**71 A**	**4**	**B5**		**14**	**160**	33	39
	83.1	250	630	20.6	4.75										
	31.6	658	400	52.9	1.25	**MR 3I 1**	**-**	**63 C**	**4**	B5*		11	140	24	28
	34.7	599	375	48.1	1.4										
	42.8	486	355	39	1.7										
	47.6	437	375	35.1	1.9										
	52.5	396	335	31.8	2.12										
	57.7	360	355	28.9	2.36										
	68.6	303	335	24.3	2.8										
	63.4	328	335	17.2	2.5	**MR 2I 1**	**-**	**71 B**	**6**	B5R		11	140	29	35
	70.5	295	355	15.5	2.8										
	77.9	267	335	14	3.15										
	75	277	315	22.3	2.36	**MR 2I 1**	**-**	**63 C**	**4**	B5*		11	140	24	28
	86.8	240	315	19.3	3.15										
	97.2	214	315	17.2	3.75										
	108	193	315	15.5	4.25										
	119	174	300	14	4.75										
	45.4	458	250	36.8	1.06	**MR 3I 0**	**-**	**63 C**	**4**	B5R		9	120	22	26
	51.1	407	265	32.7	1.18										
	57	365	250	29.3	1.32										
	63.3	329	236	26.4	1.5										
	74.8	278	212	22.3	1.8										
	81.7	254	212	20.4	1.9										
	107	194	180	15.5	2	**MR 2I 0**	**-**	**63 C**	**4**	B5R		9	120	22	26
	120	173	170	13.9	2.5										
	133	156	170	12.5	3										
	143	145	170	11.7	3.35										
	161	129	170	10.4	3.75										
	180	116	170	9.28	4.25										
	200	104	160	8.37	4.25										
	236	88	132	7.08	4.25										
	258	81	125	6.48	4.25										
	288	72	118	5.79	4.25										
	331	63	112	5.05	4.25										
	395	53	118	4.23	5.6	**MR 2I 0**	**-**	**63 C**	**4**	B5A		11	120	22	26
	453	45.9	112	3.69	5.6										
0.5	**6.62**	4 759	2 800	163	1.7	**MR 3I 7**	**-**	**71 C**	**6**	BX1		14	200	99	105
	7.28	4 326	2 800	148	1.8										
	7.67	4 109	2 800	147	1.6	**MR 3I 7**	**-**	**80 A**	**6**	**B5**		**19**	**200**	102	111
	8.49	3 711	2 800	133	2										
	9.12	3 457	2 800	124	2.36										
	8.79	3 583	2 360	194	1.8	**MR 3I 7**	**-**	**71 B**	**4**	BX1		14	200	98	104
	9.74	3 237	2 500	175	2.24										
	10.5	3 014	2 800	163	2.65										
	11.5	2 740	2 800	148	3										
	12.8	2 464	2 800	133	3.15										

* Power or motor power-to-size correspondence not according to standard.

Motor power P_1 hp	Output speed n_2 rpm	Output torque T_2 lbf in	OHL F_{r2} lbf	Ratio i	Service factor fs					ØD mm	ØP mm	Weight ≈ HF lb	Weight ≈ F0 lb
0.5	**6.01**	5 241	2 000	180	1	**MR 3I 6**	**-**	**71 C 6**	BX5	14	160	91	97
	6.89	4 576	2 240	157	1.25								
	7.73	4 077	2 240	140	1.5								
	7.41	4 254	2 120	153	1.12	**MR 3I 6**	**-**	**80 A 6**	**B5**	**19**	**200**	94	102
	8.28	3 807	2 240	137	1.4								
	9.48	3 324	2 240	119	1.7								
	10.6	2 961	2 240	106	2								
	8.49	3 710	1 800	201	1.25	**MR 3I 6**	**-**	**71 B 4**	BX5	14	160	89	95
	9.49	3 320	1 900	180	1.6								
	10.9	2 898	2 000	157	2								
	12.2	2 582	1 900	140	2.24								
	13.6	2 319	1 900	125	2.5								
	15.3	2 058	1 900	111	2.8								
	17.1	1 848	2 000	100	3.15								
	18.9	1 671	2 000	90.4	3.55								
	8.77	3 592	1 800	123	1.12	**MR 3I 5**	**-**	**71 C 6**	B5*	14	160	61	67
	9.83	3 205	1 800	110	1.32								
	10.9	2 885	1 700	98.9	1.4								
	9.56	3 295	1 500	178	1	**MR 3I 5**	**-**	**71 B 4**	BX2	11	160	59	65
	10.9	2 885	1 500	156	1.4								
	12.2	2 574	1 500	139	1.6								
	12.1	2 599	1 600	141	1.25	**MR 3I 5**	**-**	**71 B 4**	**B5**	**14**	**160**	59	65
	13.8	2 276	1 400	123	1.8								
	15.5	2 030	1 320	110	2.12								
	17.2	1 827	1 320	98.9	2.12								
	19.3	1 630	1 400	88.2	2.65								
	21.5	1 466	1 500	79.3	3								
	23.1	1 365	1 400	73.9	3.15								
	25.7	1 228	1 500	66.4	3.55								
	11.8	2 672	1 180	145	1.06	**MR 3I 4**	**-**	**71 B 4**	BX2	11	160	57	63
	13.2	2 380	1 320	129	1.25								
	13.2	2 388	1 180	129	1.12	**MR 3I 4**	**-**	**71 B 4**	**B5**	**14**	**160**	57	63
	15	2 107	1 250	114	1.4								
	16.8	1 877	1 320	102	1.6								
	18.6	1 692	1 320	91.5	1.7								
	20.9	1 507	1 320	81.6	2								
	22.3	1 411	1 320	76.4	2.12								
	25	1 262	1 320	68.3	2.36								
	27.8	1 133	1 320	61.3	2.65								
	30.8	1 024	1 320	55.4	2.8								
	33.8	931	1 320	50.4	3.15								
	36.8	856	1 320	46.3	3.55								
	41	768	1 320	41.6	3.75								
	54.4	580	1 250	31.4	3.75	**MR 2I 4**	**-**	**71 B 4**	BX5	14	160	56	62
	17.4	1 811	1 060	98	1.12	**MR 3I 3**	**-**	**71 B 4**	B5R	11	140	36	42
	19.2	1 640	1 000	88.8	1	**MR 3I 3**	**-**	**71 B 4**	**B5**	**14**	**160**	36	42
	21.6	1 457	1 120	78.8	1.18								
	24	1 312	1 180	71	1.5								
	25	1 263	1 120	68.3	1.4								
	27.7	1 137	1 120	61.5	1.7								
	32.9	957	1 120	51.8	2.12								
	35.9	877	1 120	47.5	2.12								
	41.4	761	1 060	41.2	2.24								
	46	685	1 180	37.1	2.8								
	54.6	577	1 120	31.2	3.35								
	54.8	575	850	31.1	2.36	**MR 2I 3**	**-**	**71 B 4**	BX2	11	160	36	42
	60.7	519	950	28.1	3								
	26.8	1 174	900	63.5	1.12	**MR 3I 2**	**-**	**71 B 4**	**B5**	**14**	**160**	35	41
	29.8	1 056	900	57.1	1.25								
	33	956	850	51.7	1.4								
	36.2	870	850	47.1	1.5								
	44.5	708	750	38.3	1.9								
	49.5	636	710	34.4	2.12								
	54.7	576	710	31.2	2.36								
	60.1	524	710	28.4	2.5								
	65.7	480	710	26	2.8								
	59	534	670	28.9	2	**MR 2I 2**	**-**	**71 B 4**	BX2	11	160	35	41
	65.3	482	630	26.1	2.36								
	73.4	429	670	23.2	3								
	81.7	386	670	20.9	3.35								

* Power or motor power-to-size correspondence not according to standard.

Motor power P_1 hp	Output speed n_2 rpm	Output torque T_2 lbf in	OHL F_{r2} lbf	Ratio i	Service factor fs		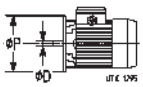	ØD mm	ØP mm	Weight ≈ HF lb	Weight ≈ F0 lb
0.5	**74.8**	421	600	22.8	2.5	**MR 2I 2**	**- 71 B 4**	**B5**	**14 × 160**	35	41
	82.8	380	600	20.6	3						
	93.1	338	630	18.3	3.75						
	43.7	721	375	39	1.18	**MR 3I 1**	**- 71 B 4**	B5R	11 × 140	28	34
	48.6	649	400	35.1	1.32						
	53.6	587	375	31.8	1.4						
	58.9	535	375	28.9	1.6						
	70.1	450	335	24.3	1.9						
	76.6	412	355	22.3	1.6	**MR 2I 1**	**- 71 B 4**	B5R	11 × 140	28	34
	88.6	356	280	19.3	2.12						
	99.2	318	280	17.2	2.5						
	110	286	300	15.5	3						
	122	259	280	14	3.15						
	134	236	280	12.8	3.55						
	110	287	180	15.5	1.4	**MR 2I 0**	**- 71 B 4**	B5B	11 × 120	26	32
	123	257	160	13.9	1.7						
	136	231	160	12.5	2						
	146	215	150	11.7	2.36						
	165	192	150	10.4	2.65						
	184	172	150	9.28	2.8						
	225	140	150	7.57	3.55						
	251	125	140	6.78	3.75						
	279	113	125	6.12	3.75						
	330	96	118	5.17	3.75						
	360	87	112	4.73	3.75						
	403	78	112	4.23	3.75						
	463	68	106	3.69	3.75						
0.75	**6.93**	6 822	2 800	163	1.18	**MR 3I 7**	**- 80 B 6**	BX2	14 × 200	105	113
	7.62	6 202	2 800	148	1.32						
	7.67	6 164	2 650	147	1.06	**MR 3I 7**	**- 80 B 6**	**B5**	**19 × 200**	105	113
	8.66	5 455	2 360	194	1.18	**MR 3I 7**	**- 71 C 4**	BX1	14 × 200	99	105
	9.59	4 927	2 500	175	1.5						
	10.3	4 589	2 500	163	1.7						
	11.3	4 172	2 650	148	1.9						
	11.6	4 061	2 500	147	1.6	**MR 3I 7**	**- 80 A 4**	**B5**	**19 × 200**	103	111
	13.8	3 416	2 650	124	2.36						
	15.2	3 106	2 650	113	2.5						
	16.9	2 792	2 800	101	2.8						
	10.7	4 412	1 900	157	1.32	**MR 3I 6**	**- 71 C 4**	BX5	14 × 160	91	97
	12	3 931	1 900	140	1.5						
	11.2	4 205	1 700	153	1.12	**MR 3I 6**	**- 80 A 4**	**B5**	**19 × 200**	94	102
	12.6	3 763	1 800	137	1.4						
	14.4	3 285	1 800	119	1.8						
	16.2	2 927	2 000	106	2						
	18.1	2 618	1 800	95	2.24						
	20.3	2 333	1 900	84.6	2.5						
	21.5	2 200	1 900	79.8	2.65						
	24.2	1 953	1 900	70.9	3						
	14.2	3 319	1 800	79.3	1.32	**MR 3I 5**	**- 80 B 6**	B5R	14 × 160	66	75
	15.3	3 090	1 800	73.9	1.4						
	17	2 779	1 800	66.4	1.6						
	13.7	3 440	1 800	82.2	1.18	**MR 3I 5**	**- 80 B 6**	**B5**	**19 × 200**	66	75
	15.4	3 070	1 700	73.4	1.4						
	17.1	2 763	1 700	66	1.4						
	13.6	3 464	1 500	123	1.12	**MR 3I 5**	**- 71 C 4**	B5*	14 × 160	61	67
	15.3	3 091	1 600	110	1.32						
	17	2 782	1 500	98.9	1.4						
	19	2 482	1 400	88.2	1.7						
	21.2	2 232	1 500	79.3	2						
	22.7	2 078	1 320	73.9	2.12						
	25.3	1 869	1 400	66.4	2.36						
	27.9	1 692	1 400	60.1	2.5						
	30.7	1 541	1 320	54.8	2.5						
	33.5	1 409	1 320	50.1	3						
	37.3	1 267	1 400	45	3.55						
	41.2	1 147	1 400	40.8	3.75						

* Power or motor power-to-size correspondence not according to standard.

Motor power P_1 hp	Output speed n_2 rpm	Output torque T_2 lbf in	OHL F_{r2} lbf	Ratio i	Service factor fs		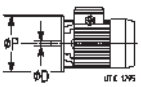	ØD mm	ØP mm	Weight ≈ HF lb	Weight ≈ F0 lb
0.75	**18.3**	2 589	1 600	93.9	1.32	**MR 3I 5**	**- 80 A 4**	**B5**	**19 × 200**	64	72
	20.9	2 267	1 400	82.2	1.8						
	23.4	2 023	1 400	73.4	2						
	26	1 820	1 320	66	2.12						
	29.1	1 624	1 400	58.9	2.65						
	32.4	1 461	1 400	53	3						
	35.7	1 322	1 320	48	3.15						
	39.3	1 204	1 250	43.7	3.15						
	16.5	2 858	1 120	102	1.06	**MR 3I 4**	**- 71 C 4**	B5*	14 × 160	58	64
	18.4	2 576	1 180	91.5	1.12						
	20.6	2 295	1 320	81.6	1.32						
	19.9	2 379	1 180	86.3	1.12	**MR 3I 4**	**- 80 A 4**	**B5**	**19 × 200**	62	70
	22.5	2 099	1 250	76.2	1.4						
	25.3	1 870	1 320	67.8	1.6						
	28.2	1 679	1 320	60.9	1.8						
	31.5	1 502	1 320	54.5	2						
	35.1	1 348	1 320	48.9	2.24						
	38.8	1 219	1 320	44.2	2.5						
	42.7	1 108	1 320	40.2	2.65						
	46.4	1 018	1 320	36.9	3						
	51.7	914	1 320	33.2	3.15						
	57.2	826	1 320	30	3.55						
	59.3	797	1 250	28.3	3.15	**MR 2I 4**	**- 71 C 4**	BX5	14 × 160	57	63
	71.9	657	1 120	23.8	3.35	**MR 2I 4**	**- 80 A 4**	**B5**	**19 × 200**	60	69
	27.3	1 731	1 120	61.5	1.12	**MR 3I 3**	**- 71 C 4**	B5*	14 × 160	38	44
	32.4	1 457	1 120	51.8	1.4						
	35.4	1 336	1 180	47.5	1.4						
	40.8	1 158	1 120	41.2	1.5						
	45.3	1 043	1 120	37.1	1.9						
	53.8	878	1 000	31.2	2.24						
	58.7	805	900	28.6	2.24						
	69.1	684	850	24.3	2.5						
	68.5	690	750	24.5	2	**MR 2I 3**	**- 71 C 4**	B5*	14 × 160	37	43
	75.8	624	750	22.2	2.5						
	85.3	554	800	19.7	3						
	94.7	499	900	17.7	3.75						
	35.7	1 325	710	47.1	1	**MR 3I 2**	**- 71 C 4**	B5*	14 × 160	37	43
	43.9	1 077	800	38.3	1.25						
	48.8	969	750	34.4	1.4						
	53.9	877	800	31.2	1.5						
	59.2	798	710	28.4	1.7						
	64.7	730	710	26	1.8						
	73.7	642	670	22.8	1.6	**MR 2I 2**	**- 71 C 4**	B5*	14 × 160	37	43
	81.6	579	630	20.6	2						
	91.8	515	630	18.3	2.5						
	102	463	630	16.5	2.8						
	113	419	630	14.9	3.15						
	124	382	600	13.6	3.55						
	135	351	600	12.5	3.75						
	90.8	521	335	12.4	1.5	**MR 2I 1**	**- 80 B 6**	B5B	14 × 140	35	43
	101	468	300	11.2	1.8						
	111	424	315	10.1	2						
	104	454	300	16.1	1.4	**MR 2I 1**	**- 71 C 4**	B5A	14 × 140	29	35
	120	392	265	13.9	1.8						
	135	350	250	12.4	2.24						
	150	315	265	11.2	2.65						
	166	285	265	10.1	3						
	182	260	265	9.24	3.15						
	216	218	280	7.77	3.75						
	235	201	280	7.16	4.25						
	274	173	265	6.14	4.25						
	294	161	250	5.71	4.25						
	339	139	236	4.96	4.25						
	368	129	224	4.57	4.5						
	423	112	200	3.97	4.5						

***** Power or motor power-to-size correspondence not according to standard.

Motor power P_1 hp	Output speed n_2 rpm	Output torque T_2 lbf in	OHL F_{r2} lbf	Ratio i	Service factor fs		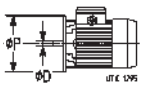	ØD mm	ØP mm	Weight ≈ HF lb	Weight ≈ F0 lb
1	**9.82**	6 417	2 240	175	1.12	**MR 3I 7**	**- 80 B 4**	BX2	14 × 200	105	113
	10.5	5 976	2 650	163	1.32						
	11.6	5 433	2 500	148	1.5						
	13.9	4 542	2 500	124	1.8	**MR 3I 7**	**- 80 B 4**	**B5**	**19 × 200**	105	113
	15.3	4 129	2 650	113	1.9						
	17	3 712	2 500	101	2.12						
	19.1	3 291	2 650	89.8	2.36						
	20.3	3 108	2 650	84.8	2.5						
	22.9	2 756	2 800	75.2	2.8						
	25.4	2 478	2 800	67.6	3.15						
	11.8	5 346	2 120	95	1.06	**MR 3I 6**	**- 80 C 6**	B5*	19 × 200	101	109
	13.2	4 763	2 240	84.6	1.25						
	12.3	5 132	2 000	91.2	1.06	**MR 3I 6**	**- 90 S 6**	**B5**	**24 × 200**	101	109
	12.6	5 002	1 600	137	1.06	**MR 3I 6**	**- 80 B 4**	**B5**	**19 × 200**	96	105
	14.4	4 367	1 900	119	1.32						
	16.2	3 891	1 900	106	1.5						
	18.1	3 481	1 700	95	1.7						
	20.3	3 101	1 900	84.6	1.9						
	21.5	2 925	2 000	79.8	2						
	24.3	2 597	1 900	70.9	2.24						
	27	2 332	1 900	63.6	2.5						
	29.9	2 108	2 000	57.5	2.8						
	35.3	1 788	2 000	48.8	3.35						
	36.9	1 706	2 000	46.6	3.55						
	41.1	1 532	2 000	41.8	3.75						
	15.7	4 025	1 400	110	1.06	**MR 3I 5**	**- 80 B 4**	B5R	14 × 160	66	75
	17.4	3 623	1 500	98.9	1.12						
	19.5	3 232	1 600	88.2	1.32						
	21.7	2 907	1 600	79.3	1.5						
	18.3	3 442	1 500	93.9	0.95	**MR 3I 5**	**- 80 B 4**	**B5**	**19 × 200**	66	75
	20.9	3 014	1 600	82.2	1.32						
	23.4	2 689	1 500	73.4	1.5						
	26	2 420	1 500	66	1.6						
	29.2	2 159	1 400	58.9	2						
	32.5	1 942	1 320	53	2.24						
	35.8	1 758	1 320	48	2.36						
	39.4	1 601	1 180	43.7	2.36						
	43	1 464	1 250	40	2.8						
	47.9	1 317	1 320	35.9	3.35						
	52.9	1 192	1 320	32.5	3.75						
	21.1	2 989	1 000	81.6	1	**MR 3I 4**	**- 80 B 4**	B5R	14 × 160	64	72
	22.6	2 790	1 060	76.2	1	**MR 3I 4**	**- 80 B 4**	**B5**	**19 × 200**	64	72
	25.4	2 486	1 320	67.8	1.18						
	28.2	2 232	1 320	60.9	1.32						
	31.6	1 996	1 320	54.5	1.5						
	35.2	1 793	1 250	48.9	1.7						
	38.9	1 620	1 320	44.2	1.8						
	42.8	1 473	1 320	40.2	2						
	46.6	1 354	1 250	36.9	2.24						
	51.9	1 215	1 320	33.2	2.5						
	57.4	1 099	1 320	30	2.65						
	63.1	998	1 320	27.2	3						
	73.7	855	1 250	23.3	3.55						
	72.2	873	1 000	23.8	2.5	**MR 2I 4**	**- 80 B 4**	**B5**	**19 × 200**	62	71
	79.9	789	1 180	21.5	3.15						
	90.5	696	1 250	19	3.75						
	33.2	1 898	1 000	51.8	1.06	**MR 3I 3**	**- 80 B 4**	B5R	14 × 160	43	51
	36.2	1 739	1 060	47.5	1.12						
	41.8	1 509	1 060	41.2	1.12						
	46.4	1 359	1 060	37.1	1.5						
	55.1	1 144	950	31.2	1.7						
	60.1	1 048	850	28.6	1.7						
	70.8	891	850	24.3	1.9						
	70.1	899	710	24.5	1.5	**MR 2I 3**	**- 80 B 4**	B5R	14 × 160	43	51
	77.6	812	750	22.2	1.9						
	87.3	722	710	19.7	2.24						
	97	650	800	17.7	3						
	104	604	710	16.5	2.65						

Motor power P_1 hp	Output speed n_2 rpm	Output torque T_2 lbf in	OHL F_{r2} lbf	Ratio i	Service factor fs						ØD mm	ØP mm	Weight ≈ HF lb	Weight ≈ F0 lb
1	**50**	1 262	670	34.4	1.06	**MR 3I 2**	**-**	**80**	**B**	**4**	B5R	14 × 160	42	51
	55.2	1 142	710	31.2	1.18									
	60.6	1 040	750	28.4	1.25									
	66.3	951	670	26	1.4									
	76.7	822	710	22.4	1.6									
	75.4	835	670	22.8	1.25	**MR 2I 2**	**-**	**80**	**B**	**4**	B5R	14 × 160	42	50
	83.6	754	670	20.6	1.5									
	93.9	671	630	18.3	1.9									
	104	603	600	16.5	2.24									
	115	546	600	14.9	2.5									
	127	497	600	13.6	2.65									
	138	457	560	12.5	3									
	151	416	560	11.4	3.15									
	165	381	560	10.4	3.55									
	191	329	500	8.98	4									
	107	591	300	16.1	1.12	**MR 2I 1**	**-**	**80**	**B**	**4**	B5B	14 × 140	35	43
	123	511	265	13.9	1.4									
	138	456	250	12.4	1.7									
	154	410	265	11.2	2									
	170	372	250	10.1	2.24									
	186	338	250	9.24	2.5									
	221	285	265	7.77	3									
	240	262	265	7.16	3.15									
	280	225	250	6.14	3.35									
	301	209	236	5.71	3.35									
	347	182	224	4.96	3.35									
	377	167	212	4.57	3.55									
	433	145	200	3.97	3.55									
1.5	**12.5**	7 581	2 800	89.8	1.06	**MR 3I 7**	**-**	**90**	**L**	**6**	B5R	19 × 200	120	133
	12.6	7 504	2 500	88.9	0.95	**MR 3I 7**	**-**	**90**	**L**	**6**	**B5**	**24 × 200**	120	133
	13.8	6 853	2 360	124	1.18	**MR 3I 7**	**-**	**80**	**C**	**4**	B5*	19 × 200	110	118
	15.2	6 230	2 500	113	1.25									
	16.9	5 601	2 500	101	1.4									
	19	4 966	2 650	89.8	1.6									
	17.4	5 442	2 360	98.4	1.18	**MR 3I 7**	**-**	**90**	**S**	**4**	**B5**	**24 × 200**	110	118
	19.2	4 915	2 500	88.9	1.5									
	20.7	4 578	2 500	82.8	1.7									
	22.7	4 161	2 650	75.3	1.9									
	25.3	3 741	2 500	67.7	2.12									
	28.5	3 317	2 650	60	2.36									
	31.7	2 982	2 800	53.9	2.65									
	38.5	2 456	2 800	44.4	3.15									
	16.1	5 870	1 500	106	1	**MR 3I 6**	**-**	**80**	**C**	**4**	B5*	19 × 200	101	109
	18	5 252	1 600	95	1.12									
	20.2	4 679	1 900	84.6	1.25									
	18.8	5 042	1 600	91.2	1.06	**MR 3I 6**	**-**	**90**	**S**	**4**	**B5**	**24 × 200**	101	109
	21.5	4 402	1 900	79.6	1.32									
	24.1	3 921	1 900	70.9	1.5									
	26.8	3 521	1 800	63.7	1.7									
	30.2	3 126	1 900	56.5	1.9									
	33.7	2 807	1 800	50.8	2.12									
	37.3	2 537	1 900	45.9	2.36									
	43.9	2 152	2 000	38.9	2.8									
	46	2 054	2 000	37.2	2.8									
	51.3	1 844	1 900	33.4	3.15									
	56.7	1 667	1 900	30.2	3.55									
	67.6	1 399	1 800	25.3	3.15	**MR 2I 6**	**-**	**80**	**C**	**4**	B5*	19 × 200	98	106
	75.5	1 252	1 900	22.6	4									
	23.3	4 057	1 400	73.4	1	**MR 3I 5**	**-**	**80**	**C**	**4**	B5*	19 × 200	71	79
	26.4	3 582	1 500	64.8	1.12	**MR 3I 5**	**-**	**90**	**S**	**4**	**B5**	**24 × 200**	71	79
	29.6	3 197	1 500	57.8	1.25									
	32.9	2 877	1 500	52	1.32									
	36.8	2 567	1 400	46.4	1.6									
	41	2 309	1 320	41.8	1.9									
	45.2	2 090	1 320	37.8	2									
	49.7	1 903	1 250	34.4	2									
	54.3	1 740	1 120	31.5	2.36									
	60.4	1 565	1 180	28.3	2.8									
	66.7	1 417	1 180	25.6	3.15									
	73.3	1 290	1 180	23.3	3.35									
	73	1 296	950	23.4	2.36	**MR 2I 5**	**-**	**80**	**C**	**4**	B5*	19 × 200	71	78
	83.3	1 134	1 060	20.5	3.35									

* Power or motor power-to-size correspondence not according to standard.

Motor power P_1 hp	Output speed n_2 rpm	Output torque T_2 lbf in	OHL F_{r2} lbf	Ratio i	Service factor fs							ØD mm	ØP mm	Weight ≈ HF lb	Weight ≈ F0 lb
1.5	**32**	2 955	1 000	53.5	1	**MR 3I 4**	**-**	**90 S**	**4**	**B5**		**24**	**200**	69	77
	35.6	2 654	1 120	48	1.12										
	39.8	2 373	1 250	42.9	1.25										
	44.4	2 131	1 180	38.5	1.4										
	49.1	1 926	1 250	34.8	1.5										
	54	1 750	1 120	31.7	1.7										
	58.8	1 609	1 180	29.1	1.8										
	65.4	1 445	1 180	26.1	2										
	72.4	1 306	1 060	23.6	2.24										
	71.7	1 318	900	23.8	1.7	**MR 2I 4**	**-**	**80 C**	**4**	B5*		19	200	68	75
	79.4	1 190	950	21.5	2.12										
	90	1 050	1 060	19	2.5										
	101	936	1 180	16.9	3.15										
	107	880	950	15.9	2.5	**MR 2I 4**	**-**	**90 S**	**4**	**B5**		**24**	**200**	68	75
	119	795	1 060	14.4	3										
	135	702	1 180	12.7	3.75										
	51.9	1 822	750	33	0.95	**MR 3I 3**	**-**	**80 C**	**4**	B5A		19	160	48	56
	57.6	1 641	950	29.7	1.18										
	68.4	1 382	850	25	1.4										
	83.3	1 135	710	20.5	1.18	**MR 2I 3**	**-**	**80 C**	**4**	B5R		14	160	48	56
	92.1	1 026	600	18.6	1.5										
	104	912	630	16.5	1.8										
	115	821	670	14.8	2.36										
	130	727	560	13.2	2.24	**MR 2I 3**	**-**	**80 C**	**4**	B5A		19	160	48	56
	144	655	710	11.8	2.8										
	171	551	710	9.97	3.55										
	68.5	1 380	500	25	0.95	**MR 3I 2**	**-**	**80 C**	**4**	B5A		19	160	47	55
	75.3	1 256	560	22.7	1.06										
	82.3	1 149	600	20.8	1.18										
	95.2	993	670	18	1.32										
	89.6	1 055	475	19.1	1	**MR 2I 2**	**-**	**80 C**	**4**	B5R		14	160	47	55
	99.2	953	600	17.2	1.18										
	112	842	560	15.2	1.25	**MR 2I 2**	**-**	**80 C**	**4**	B5A		19	160	47	55
	124	760	530	13.8	1.5										
	140	676	530	12.2	1.8										
	155	608	500	11	2.24										
	172	551	500	9.96	2.36										
	189	501	450	9.07	2.65										
	206	458	475	8.29	2.8										
	239	395	475	7.14	3.35										
	262	361	475	6.53	3.75										
	303	312	450	5.65	4.25										
	335	283	425	5.11	4.75										
	389	243	425	4.4	4.75										
	418	226	400	4.1	4.75										
2	**16.6**	7 616	2 800	67.7	1.06	**MR 3I 7**	**-**	**90 LC**	**6**	B5*		24	200	122	135
	18.7	6 753	2 800	60	1.18										
	17.5	7 213	2 800	65.2	1.12	**MR 3I 7**	**-**	**100 LA**	**6**	**B5**		**28**	**250**	135	151
	19.2	6 557	2 800	59.3	1.18										
	21.4	5 895	2 800	53.3	1.32										
	19.2	6 553	2 240	88.9	1.12	**MR 3I 7**	**-**	**90 L**	**4**	**B5**		**24**	**200**	116	129
	20.7	6 104	2 650	82.8	1.32										
	22.7	5 549	2 500	75.3	1.4										
	25.3	4 988	2 650	67.7	1.6										
	28.5	4 423	2 500	60	1.8										
	31.7	3 976	2 650	53.9	2										
	38.5	3 275	2 650	44.4	2.5										
	43.4	2 906	2 800	39.4	2.8										
	48.2	2 613	2 800	35.4	3										
	21.5	5 869	1 400	79.6	1	**MR 3I 6**	**-**	**90 L**	**4**	**B5**		**24**	**200**	108	120
	24.1	5 229	1 700	70.9	1.12										
	26.8	4 695	1 900	63.7	1.25										
	30.2	4 168	1 800	56.5	1.4										
	33.7	3 742	2 000	50.8	1.6										
	37.3	3 383	1 900	45.9	1.8										
	43.9	2 869	1 800	38.9	2.12										
	46	2 739	1 900	37.2	2.12										
	51.3	2 459	1 800	33.4	2.36										
	56.7	2 223	1 800	30.2	2.65										
	66.9	1 885	1 700	25.6	3.15										
	67.6	1 866	1 700	25.3	2.36	**MR 2I 6**	**-**	**90 L**	**4**	B5R		19	200	104	117
	75.5	1 670	1 800	22.6	3										
	86.5	1 458	1 800	19.8	3.75										

***** Power or motor power-to-size correspondence not according to standard.

Motor power P_1 hp	Output speed n_2 rpm	Output torque T_2 lbf in	OHL F_{r2} lbf	Ratio i	Service factor fs		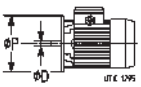	ØD mm	ØP mm	Weight ≈ HF lb	Weight ≈ F0 lb
2	**29.6**	4 262	1 180	57.8	0.95	**MR 3I 5**	**- 90 L 4**	**B5**	**24 × 200**	78	90
	32.9	3 836	1 250	52	1						
	36.8	3 423	1 500	46.4	1.25						
	41	3 078	1 400	41.8	1.4						
	45.2	2 787	1 320	37.8	1.5						
	49.7	2 537	1 250	34.4	1.5						
	54.3	2 320	1 180	31.5	1.8						
	60.4	2 087	1 120	28.3	2.12						
	66.7	1 889	1 120	25.6	2.36						
	73.3	1 720	1 120	23.3	2.65						
	80.1	1 573	1 060	21.3	2.65						
	73	1 727	950	23.4	1.8	**MR 2I 5**	**- 90 L 4**	B5R	19 × 200	77	89
	83.3	1 513	1 000	20.5	2.5						
	93.4	1 350	1 060	18.3	3						
	104	1 214	1 120	16.5	3.55						
	115	1 099	1 060	14.9	4						
	124	1 016	1 060	13.8	4.25						
	109	1 154	850	15.7	2.65	**MR 2I 5**	**- 90 L 4**	**B5**	**24 × 200**	77	89
	125	1 010	950	13.7	3.55						
	39.8	3 164	850	42.9	0.95	**MR 3I 4**	**- 90 L 4**	**B5**	**24 × 200**	76	88
	44.4	2 841	1 000	38.5	1.06						
	49.1	2 568	1 060	34.8	1.18						
	54	2 334	1 120	31.7	1.25						
	58.8	2 145	1 060	29.1	1.4						
	65.4	1 926	1 120	26.1	1.5						
	72.4	1 741	950	23.6	1.7						
	79.7	1 582	950	21.5	1.9						
	71.7	1 757	950	23.8	1.25	**MR 2I 4**	**- 90 L 4**	B5R	19 × 200	74	86
	79.4	1 587	1 000	21.5	1.5						
	90	1 401	1 000	19	1.9						
	101	1 248	1 060	16.9	2.36						
	107	1 174	900	15.9	1.9	**MR 2I 4**	**- 90 L 4**	**B5**	**24 × 200**	74	86
	119	1 060	900	14.4	2.24						
	135	936	1 060	12.7	2.8						
	151	834	1 060	11.3	3.35						
	85.1	1 480	600	13.2	1.12	**MR 2I 3**	**- 90 LC 6**	B5B	19 × 160	60	73
	94.5	1 333	710	11.8	1.4						
	112	1 122	630	9.97	1.8						
	123	1 028	630	9.14	1.9						
	104	1 208	530	16.4	1.12	**MR 2I 3**	**- 90 L 4**	B5B	19 × 160	55	67
	115	1 092	500	14.8	1.4						
	130	970	500	13.2	1.7						
	144	873	560	11.8	2.12						
	171	735	600	9.97	2.65						
	187	674	600	9.14	3						
	220	572	600	7.76	3.35						
	124	1 014	475	13.8	1.12	**MR 2I 2**	**- 90 L 4**	B5B	19 × 160	54	66
	140	902	500	12.2	1.4						
	155	811	530	11	1.6						
	172	734	475	9.96	1.8						
	189	668	400	9.07	2						
	206	611	375	8.29	2.12						
	239	527	425	7.14	2.5						
	262	482	425	6.53	2.8						
	303	416	425	5.65	3.15						
	335	377	425	5.11	3.55						
	389	324	400	4.4	3.55						
	418	302	400	4.1	3.55						
2.5	**22.3**	7 060	2 240	75.3	1.12	**MR 3I 7**	**- 90 LB 4**	B5*	24 × 200	119	131
	24.8	6 347	2 500	67.7	1.25						
	28	5 627	2 500	60	1.4						
	31.1	5 059	2 650	53.9	1.6						
	37.8	4 166	2 650	44.4	1.9						
	42.6	3 698	2 500	39.4	2.12						
	47.4	3 325	2 500	35.4	2.36						
	57.5	2 738	2 500	29.2	3						

***** Power or motor power-to-size correspondence not according to standard.

Motor power P_1 hp	Output speed n_2 rpm	Output torque T_2 lbf in	OHL F_{r2} lbf	Ratio i	Service factor fs		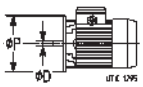	ØD mm	ØP mm	Weight ≈ HF lb	Weight ≈ F0 lb
2.5	**26.4**	5 974	1 500	63.7	1	**MR 3I 6**	**- 90 LB 4**	B5*	24 × 200	110	122
	29.7	5 303	1 700	56.5	1.12						
	33.1	4 762	1 900	50.8	1.25						
	36.6	4 304	1 800	45.9	1.4						
	43.2	3 651	2 000	38.9	1.6						
	45.2	3 485	1 900	37.2	1.7						
	50.4	3 129	1 900	33.4	1.9						
	55.7	2 828	1 600	30.2	2.12						
	65.7	2 399	1 600	25.6	2.5						
	73.2	2 151	1 600	22.9	2.8						
	79.6	1 979	1 600	21.1	3						
	66.4	2 374	1 800	25.3	1.9	**MR 2I 6**	**- 90 LB 4**	B5R	19 × 200	107	119
	74.2	2 124	1 800	22.6	2.36						
	85	1 854	1 700	19.8	2.8						
	95.4	1 652	1 700	17.6	3.55						
	40.2	3 916	1 400	41.8	1.12	**MR 3I 5**	**- 90 LB 4**	B5*	24 × 200	80	92
	44.4	3 546	1 320	37.8	1.18						
	48.8	3 228	1 320	34.4	1.18						
	53.4	2 952	1 250	31.5	1.4						
	59.3	2 655	1 180	28.3	1.7						
	65.5	2 404	1 180	25.6	1.8						
	72	2 188	1 180	23.3	2						
	78.7	2 002	1 120	21.3	2						
	93	1 694	1 000	18.1	2						
	81.9	1 925	1 060	20.5	1.9	**MR 2I 5**	**- 90 LB 4**	B5R	19 × 200	79	91
	91.8	1 717	1 060	18.3	2.36						
	102	1 544	1 060	16.5	2.8						
	113	1 398	1 060	14.9	3.15						
	122	1 293	1 060	13.8	3.35						
	57.7	2 730	950	29.1	1.06	**MR 3I 4**	**- 90 LB 4**	B5*	24 × 200	78	90
	64.3	2 451	1 000	26.1	1.18						
	71.1	2 215	1 000	23.6	1.32						
	78.3	2 013	900	21.5	1.5						
	91.4	1 723	750	18.4	1.7						
	70.5	2 236	750	23.8	1	**MR 2I 4**	**- 90 LB 4**	B5R	19 × 200	76	88
	78	2 020	950	21.5	1.18						
	88.4	1 782	1 000	19	1.5						
	99.2	1 588	1 000	16.9	1.8						
	111	1 426	950	15.2	2.12						
	119	1 329	900	14.2	2.12						
	132	1 194	900	12.7	2.5						
	146	1 079	900	11.5	2.8						
	161	981	900	10.5	3						
	183	861	900	9.18	3.35	**MR 2I 4**	**- 90 LB 4**	B5*	24 × 200	76	88
	201	782	900	8.34	3.75						
	113	1 389	425	14.8	1.06	**MR 2I 3**	**- 90 LB 4**	B5B	19 × 160	57	69
	128	1 234	560	13.2	1.32						
	142	1 111	530	11.8	1.7						
	168	935	500	9.97	2.12						
	184	857	500	9.14	2.36						
	216	728	500	7.76	2.65						
	233	675	530	7.2	2.8						
	275	574	530	6.12	2.8						
	137	1 147	425	12.2	1.06	**MR 2I 2**	**- 90 LB 4**	B5B	19 × 160	56	68
	153	1 032	500	11	1.32						
	169	934	425	9.96	1.4						
	185	850	355	9.07	1.6						
	203	778	335	8.29	1.7						
	235	670	400	7.14	2						
	257	613	355	6.53	2.12						
	298	530	355	5.65	2.5						
	329	479	355	5.11	2.8						
	382	413	355	4.4	2.8						
	410	384	355	4.1	2.8						
3	**24.6**	7 700	1 700	70	0.95	**MR 3I 7**	**- 100 LA 4**	**B5**	**28 × 250**	129	142
	26.4	7 171	2 120	65.2	1.12						
	29	6 519	2 360	59.3	1.25						
	32.3	5 861	2 650	53.3	1.32						
	36.4	5 197	2 500	47.3	1.5						
	40.5	4 672	2 360	42.5	1.7						
	49.1	3 847	2 500	35	2						
	55.4	3 415	2 360	31.1	2.36						
	61.6	3 070	2 360	27.9	2.65						
	74.8	2 528	2 240	23	3.15						

***** Power or motor power-to-size correspondence not according to standard.

Motor power P_1 hp	Output speed n_2 rpm	Output torque T_2 lbf in	OHL F_{r2} lbf	Ratio i	Service factor fs					ØD mm	ØP mm	Weight ≈ HF lb	Weight ≈ F0 lb
3	**75.5**	2 503	2 240	22.5	2.5	**MR 2I 7**	**-**	**90 LC 4**	B5*	24	200	120	134
	30.1	6 288	1 320	56.5	0.95	**MR 3I 6**	**-**	**90 LC 4**	B5*	24	200	113	127
	33.5	5 647	1 600	50.8	1.06								
	37	5 104	1 800	45.9	1.18								
	43.7	4 329	1 800	38.9	1.4								
	45.8	4 132	1 900	37.2	1.4								
	51	3 711	1 900	33.4	1.6								
	56.4	3 354	1 600	30.2	1.8								
	66.5	2 845	1 500	25.6	2.12								
	74.1	2 551	1 400	22.9	2.36								
	80.6	2 346	1 400	21.1	2.5								
	67.2	2 815	2 000	25.3	1.6	**MR 2I 6**	**-**	**90 LC 4**	B5R	19	200	110	123
	75.1	2 519	1 900	22.6	2								
	86	2 199	1 700	19.8	2.5								
	96.5	1 959	1 600	17.6	3								
	107	1 759	1 600	15.8	3.35								
	119	1 585	1 500	14.3	3.55								
	40.7	4 644	1 000	41.8	0.95	**MR 3I 5**	**-**	**90 LC 4**	B5*	24	200	83	97
	45	4 205	1 000	37.8	1								
	49.4	3 828	1 000	34.4	1								
	54	3 501	1 250	31.5	1.18								
	60	3 149	1 250	28.3	1.4								
	66.3	2 851	1 250	25.6	1.6								
	72.9	2 595	1 120	23.3	1.7								
	79.7	2 374	1 060	21.3	1.7								
	94.1	2 009	950	18.1	1.7								
	82.8	2 282	1 120	20.5	1.6	**MR 2I 5**	**-**	**90 LC 4**	B5R	19	200	83	96
	92.9	2 036	1 120	18.3	2								
	103	1 831	1 060	16.5	2.36								
	114	1 658	1 000	14.9	2.65								
	123	1 534	1 000	13.8	2.8								
	136	1 388	1 000	12.5	3.15								
	155	1 223	950	11	3.35	**MR 2I 5**	**-**	**90 LC 4**	B5*	24	200	83	96
	58.4	3 237	630	29.1	0.9	**MR 3I 4**	**-**	**90 LC 4**	B5*	24	200	81	94
	65.1	2 907	750	26.1	1								
	72	2 627	800	23.6	1.12								
	79.2	2 388	800	21.5	1.25								
	92.5	2 044	750	18.4	1.5								
	78.9	2 395	750	21.5	1	**MR 2I 4**	**-**	**90 LC 4**	B5R	19	200	80	93
	89.5	2 113	950	19	1.25								
	100	1 883	1 000	16.9	1.5								
	112	1 691	950	15.2	1.8								
	120	1 576	900	14.2	1.8								
	134	1 416	800	12.7	2.12								
	148	1279	800	11.5	2.36								
	163	1 163	800	10.5	2.5								
	185	1 021	850	9.18	3	**MR 2I 4**	**-**	**90 LC 4**	B5*	24	200	80	93
	204	928	850	8.34	3.15								
	235	804	850	7.23	3.75								
	259	731	850	6.57	4								
	302	626	800	5.63	4.25								
	336	563	800	5.06	4.25								
	373	507	800	4.56	4.25								
	425	445	750	4	4.25								
	129	1 463	425	13.2	1.12	**MR 2I 3**	**-**	**90 LC 4**	B5B	19	160	60	73
	144	1 318	530	11.8	1.4								
	170	1 109	475	9.97	1.8								
	186	1 016	500	9.14	2								
	219	864	425	7.76	2.12								
	236	801	450	7.2	2.36								
	278	680	450	6.12	2.36								
	300	630	400	5.67	2.36								
	155	1 223	375	11	1.06	**MR 2I 2**	**-**	**90 LC 4**	B5B	19	160	59	73
	171	1 108	400	9.96	1.18								
	188	1 008	335	9.07	1.32								
	205	922	315	8.29	1.4								
	238	794	315	7.14	1.7								
	260	727	335	6.53	1.8								
	301	628	300	5.65	2.12								
	333	568	300	5.11	2.36								
	386	489	300	4.4	2.36								
	415	455	315	4.1	2.36								

***** Power or motor power-to-size correspondence not according to standard.

Motor power P_1 hp	Output speed n_2 rpm	Output torque T_2 lbf in	OHL F_{r2} lbf	Ratio i	Service factor fs						ØD mm	ØP mm	Weight ≈ HF lb	Weight ≈ F0 lb
5	**36.4**	8 661	1 600	47.3	0.9	**MR 3I 7**	**-**	**100 LB 4**	**B5**		**28**	**250**	137	151
	49.1	6 412	2 240	35	1.25									
	55.4	5 692	2 120	31.1	1.4									
	61.6	5 117	2 120	27.9	1.6									
	74.8	4 214	1 800	23	1.9									
	81.8	3 853	1 600	21	2.12									
	76.4	4 123	2 120	22.5	1.5	**MR 2I 7**	**-**	**100 LB 4**	B5R		24	200	136	149
	84.6	3 724	2 120	20.3	1.8									
	90.9	3 468	2 000	18.9	2.12									
	100	3 153	2 000	17.2	2.5									
	111	2 834	2 000	15.5	2.8									
	111	2 831	1 800	15.5	2.12	**MR 2I 7**	**-**	**100 LB 4**	**B5**		**28**	**250**	136	149
	44.2	7 131	1 000	38.9	0.85	**MR 3I 6**	**-**	**100 LB 4**	B5R		24	200	129	142
	46.3	6 807	1 180	37.2	0.85									
	51.6	6 112	1 250	33.4	0.95									
	57	5 525	1 320	30.2	1.06									
	67.2	4 686	1 400	25.6	1.25									
	75	4 202	1 180	22.9	1.4									
	81.5	3 865	1 250	21.1	1.5									
	84	3 752	1 800	20.5	1.18	**MR 2I 6**	**-**	**100 LB 4**	B5S		19	200	125	139
	93.8	3 358	1 700	18.3	1.5									
	108	2 931	1 500	16	1.8									
	121	2 612	1 320	14.3	2.24									
	138	2 290	1 320	12.5	2.24	**MR 2I 6**	**-**	**100 LB 4**	B5R		24	200	125	139
	60.8	5 187	475	28.3	0.85	**MR 3I 5**	**-**	**100 LB 4**	B5R		24	200	99	112
	67.1	4 696	600	25.6	0.95									
	73.7	4 275	670	23.3	1.06									
	80.6	3 910	670	21.3	1.06									
	95.2	3 309	670	18.1	1.06									
	87.7	3 595	530	19.6	0.85	**MR 2I 5**	**-**	**100 LB 4**	B5S		19	200	98	111
	100	3 148	950	17.2	1.18									
	112	2 809	1 000	15.3	1.4									
	125	2 526	950	13.8	1.7									
	141	2 241	950	12.2	1.8	**MR 2I 5**	**-**	**100 LB 4**	B5R		24	200	98	111
	156	2 015	850	11	2.12									
	173	1 825	850	9.96	2.36									
	198	1 588	850	8.67	2.65									
	219	1 438	800	7.85	2.65									
	120	2 635	475	14.4	0.9	**MR 2I 4**	**-**	**100 LB 4**	B5R		24	200	95	108
	136	2 325	710	12.7	1.12									
	152	2 072	750	11.3	1.32									
	169	1 860	670	10.2	1.6									
	187	1 681	560	9.18	1.8									
	206	1 528	600	8.34	1.9									
	238	1 325	560	7.23	2.24									
	262	1 204	560	6.57	2.5									
	306	1 031	600	5.63	2.65									
	340	927	600	5.06	2.65									
	378	835	560	4.56	2.65									
	430	733	600	4	2.65									
	166	1 899	170	10.4	0.85	**MR 2I 3**	**-**	**100 LB 4**	B5C		19	160	76	89
	184	1 710	315	9.33	1.06									
	219	1 440	300	7.86	1.4									
	239	1 319	335	7.2	1.4									
	281	1 121	335	6.12	1.4									
	304	1 038	280	5.67	1.4									
	351	898	280	4.9	1.4									
	376	838	280	4.57	1.4									
	430	733	280	4	1.4									
	198	1 588	53	8.67	0.8	**MR 2I 2**	**-**	**100 LB 4**	B5C		19	160	75	88
	219	1 438	67	7.85	0.9									
	241	1 309	150	7.14	1									
	263	1 197	180	6.53	1.12									
	305	1 035	224	5.65	1.32									
	391	806	200	4.4	1.4									
	420	750	212	4.1	1.4									
5.4	**49.4**	6 885	2 000	35	1.12	**MR 3I 7**	**-**	**112 M 4**	**B5**		**28**	**250**	151	168
	55.7	6 111	2 240	31.1	1.32									
	61.9	5 494	2 000	27.9	1.4									
	75.2	4 525	1 700	23	1.8									
	82.3	4 137	1 700	21	1.9									
	95.2	3 574	1 800	18.2	2									

Motor power P_1 hp	Output speed n_2 rpm	Output torque T_2 lbf in	OHL F_{r2} lbf	Ratio i	Service factor fs					ØD mm	ØP mm	Weight ≈ HF lb	Weight ≈ F0 lb
5.4	**76.9**	4 427	2 000	22.5	1.4	**MR 2I 7**	**-**	**112 M 4**	B5R	24	200	149	167
	85.1	3 998	2 000	20.3	1.7								
	91.4	3 724	2 120	18.9	2								
	101	3 385	1 900	17.2	2.36								
	112	3 043	1 900	15.5	2.65								
	112	3 040	1 900	15.5	2	**MR 2I 7**	**-**	**112 M 4**	**B5**	**28**	**250**	149	167
	122	2 790	1 900	14.2	2.8								
	136	2 508	1 900	12.8	3.15								
	57.4	5 932	1 180	30.2	1	**MR 3I 6**	**-**	**112 M 4**	B5R	24	200	142	160
	67.6	5 032	1 320	25.6	1.18								
	75.4	4 512	1 320	22.9	1.32								
	82	4 150	1 120	21.1	1.4								
	108	3 148	1 600	16	1.4	**MR 2I 6**	**-**	**112 M 4**	B5R	24	200	139	156
	121	2 817	1 400	14.3	1.7								
	138	2 459	1 250	12.5	2.12								
	155	2 191	1 250	11.1	2.5								
	173	1 967	1 250	10	3								
	191	1 778	1 250	9.04	3.15								
	111	3 080	710	15.7	1	**MR 2I 5**	**-**	**112 M 4**	B5R	24	200	111	129
	126	2 697	1 060	13.7	1.32								
	141	2 406	1 060	12.2	1.6								
	157	2 164	950	11	1.9								
	174	1 959	850	9.96	2.24								
	200	1 705	800	8.67	2.5								
	220	1 544	800	7.85	2.5								
	242	1 405	800	7.14	2.5								
	265	1 285	710	6.53	2.5								
	170	1 998	600	10.2	1.5	**MR 2I 4**	**-**	**112 M 4**	B5R	24	200	108	126
	189	1 805	630	9.18	1.6								
	207	1 641	530	8.34	1.8								
	239	1 422	500	7.23	2.12								
	263	1 293	500	6.57	2.24								
	308	1 107	530	5.63	2.5								
	342	995	530	5.06	2.5								
	380	896	530	4.56	2.5								
	433	787	560	4	2.5								
7.5	**73.9**	6 395	1 600	23	1.25	**MR 3I 7**	**-**	**112 MC 4**	B5*	28	250	162	184
	80.8	5 847	1 400	21	1.4								
	93.6	5 052	1 500	18.2	1.4								
	101	4 657	1 900	16.8	1.4	**MR 2I 7**	**-**	**112 MC 4**	B5*	28	250	160	182
	109	4 338	1 700	15.6	1.7								
	120	3 943	1 800	14.2	2								
	133	3 545	1 500	12.8	2.24								
	144	3 286	1 600	11.8	2.36								
	160	2 954	1 600	10.6	2.65								
	194	2 433	1 600	8.75	3.15								
	106	4 449	1 400	16	1	**MR 2I 6**	**-**	**112 MC 4**	B5R	24	200	150	172
	119	3 981	1 400	14.3	1.18								
	136	3 476	1 320	12.5	1.5								
	153	3 096	1 120	11.1	1.8								
	170	2 781	1 000	10	2.12								
	188	2 513	1 060	9.04	2.24								
	210	2 256	1 060	8.11	2.65								
	232	2 039	1 060	7.33	2.65								
	273	1 730	1 060	6.22	2.65								
	305	1 551	1 060	5.58	2.65								
	331	1 427	1 000	5.13	2.65								
	157	3 003	850	10.8	1.18	**MR 2I 5**	**-**	**112 MC 4**	B5R	24	200	122	144
	176	2 679	850	9.64	1.5								
	196	2 410	710	8.67	1.7								
	217	2 182	750	7.85	1.7								
	238	1 986	750	7.14	1.7								
	260	1 817	670	6.53	1.7								
	307	1 537	630	5.53	1.7								
	333	1 421	600	5.11	1.7								
	386	1 223	600	4.4	1.7								

***** Power or motor power-to-size correspondence not according to standard.

Motor power P_1 hp	Output speed n_2 rpm	Output torque T_2 lbf in	OHL F_{r2} lbf	Ratio i	Service factor fs		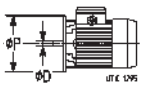	ØD mm	ØP mm	Weight ≈ HF lb	Weight ≈ F0 lb
7.5	**235**	2 011	400	7.23	1.5	**MR 2I 4**	**- 112 MC 4**	B5R	24 × 200	119	141
	259	1 827	425	6.57	1.6						
	302	1 564	375	5.63	1.7						
	336	1 407	400	5.06	1.7						
	373	1 267	400	4.56	1.7						
	425	1 112	425	4	1.7						
10	**113**	5 566	1 500	15.5	1.06	**MR 2I 7**	**- 132 M 4**	B5R	28 × 250	215	242
	125	5 027	1 900	14	1.32						
	135	4 682	1 600	13	1.5						
	148	4 256	1 400	11.8	1.8						
	165	3 827	1 250	10.6	2.12						
	200	3 151	1 320	8.75	2.36						
	219	2 881	1 320	8	2.36						
	250	2 521	1 320	7	2.5						
	273	2 305	1 320	6.4	2.5						
	316	1 991	1 320	5.53	2.5						
	350	1 801	1 320	5	2.5						
	151	4 184	1 180	11.6	1.12	**MR 2I 6**	**- 132 M 4**	B5S	24 × 200	205	231
	173	3 653	1 060	10.1	1.4						
	194	3 254	900	9.04	1.7						
	216	2 922	950	8.11	2						
	239	2 641	950	7.33	2						
	281	2 240	950	6.22	2						
	314	2 009	950	5.58	2						
	341	1 848	950	5.13	2						
	223	2 826	710	7.85	1.32	**MR 2I 5**	**- 132 M 4**	B5S	24 × 200	177	204
	245	2 572	750	7.14	1.32						
	268	2 353	670	6.53	1.32						
	316	1 991	630	5.53	1.32						
	342	1 841	600	5.11	1.32						
	398	1 585	630	4.4	1.32						
12.5	**142**	5 566	1 400	12.4	1.06	**MR 2I 7**	**- 132 MB 4**	B5R	28 × 250	224	251
	157	5 027	1 600	11.2	1.32						
	168	4 682	1 400	10.4	1.5						
	185	4 256	1 180	9.45	1.8						
	206	3 827	1 250	8.5	1.7						
	250	3 151	1 320	7	2						
	273	2 881	1 320	6.4	2						
	316	2 489	1 320	5.53	2						
	350	2 251	1 320	5	2						
15	**168**	5 618	1 250	10.4	1.25	**MR 2I 7**	**- 132 MC 4**	B5R	28 × 250	231	257
	185	5 108	1 120	9.45	1.5						
	206	4 592	1 180	8.5	1.4						
	250	3 782	1 060	7	1.7						
	273	3 457	1 060	6.4	1.7						
	316	2 987	1 120	5.53	1.7						
	350	2 701	1 120	5	1.7						

9 - Dimensions

Size **0**

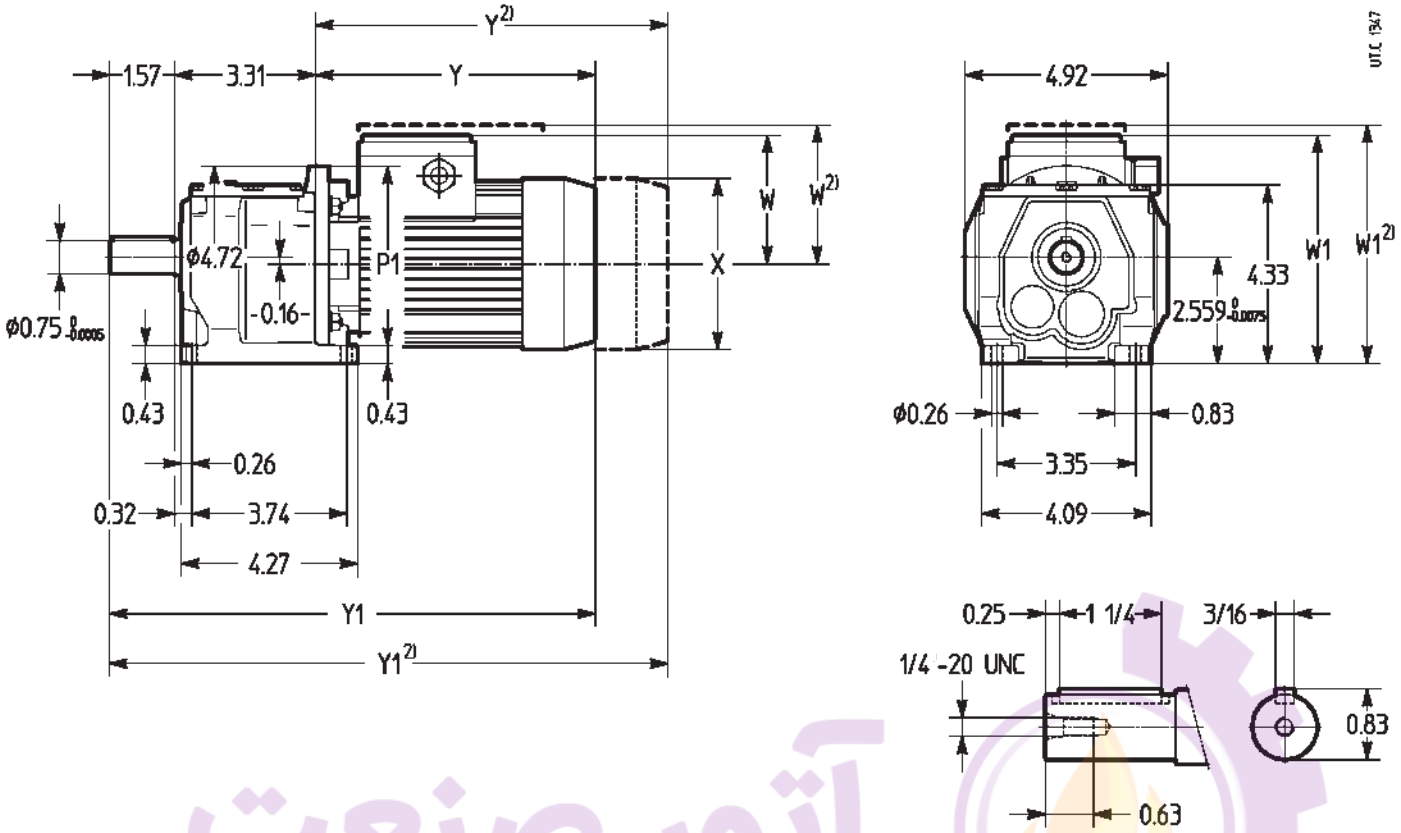

Motor size		P1 Ø	X Ø ≈		Y ≈		Y1 ≈		W ≈		W1 ≈		NEMA C-Face adapter[3] Code	Y2	Y3 ≈
	1)			2)		2)		2)		2)		2)			
56	**B5**	4.72	4.41	–	7.01	–	11.89	–	3.90	–	6.30	–	–	–	–
63	**B5A**	4.72	4.80	4.80	7.95	9.61	12.83	14.49	3.62	4.09	6.02	6.54	–	–	–
	B5R		4.84		8.78		13.66		4.33		6.77		–		
71[5]	**B5B**	4.72	5.51	5.51	8.86	11.34	13.74	16.22	4.02	4.49	6.77	7.24	–	–	–

1) Motor mounting position (see ch. 2b).
2) Values valid for F0 brake motor.
3) Not available.
5) Motor housing projects below the foot mounting surface: in this case W1 dimension is referred to motor housing

Size **1**

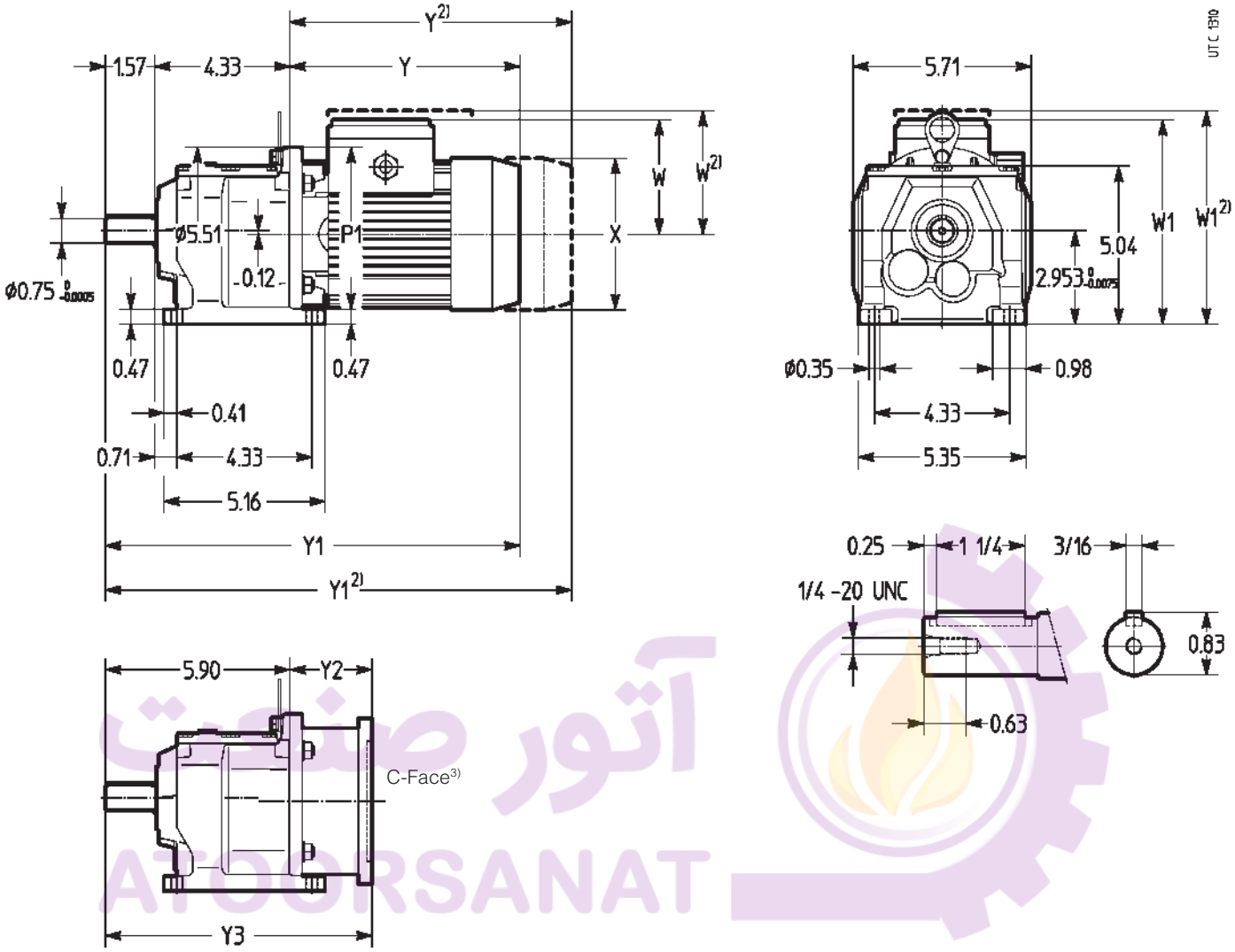

Motor size		P1 Ø	X Ø ≈		Y ≈		Y1 ≈		W ≈		W1 ≈		NEMA C-Face adapter3) Code	Y2	Y3 ≈
	1)			2)		2)		2)		2)		2)			
63 A	**B5**	5.51	4.84	4.80	7.80	9.02	13.70	14.92	4.33	4.09	7.17	6.93	–	–	–
B	**B5**												MPN 63 B5 - 56 C4)	2.70	8.60
C	**B5**												MPN 63 B5 - 56 C		
71	**B5A**	5.51	5.51	5.51	8.86	11.34	14.76	17.24	4.02	4.49	6.85	7.32	MPN 71 B5A - 56 C	2.70	8.80
	B5R				9.06		14.96		4.65		7.48		MPN 63 B5 - 56 C		
805)	**B5B**	5.51	6.26	6.26	9.84	12.80	15.75	18.70	4.45	5.08	7.60	8.23	MPN 71 B5A - 56 C	2.70	8.60

1) Motor mounting position (see ch. 2b)
2) Values valid for F0 brake motor.
3) Available on request: for further dimensions and details see ch. 12.
4) Not available for 63B 6 motor.
5) Motor housing projects below the foot mounting surface: in this case W1 dimension is referred to motor housing

Size **2**

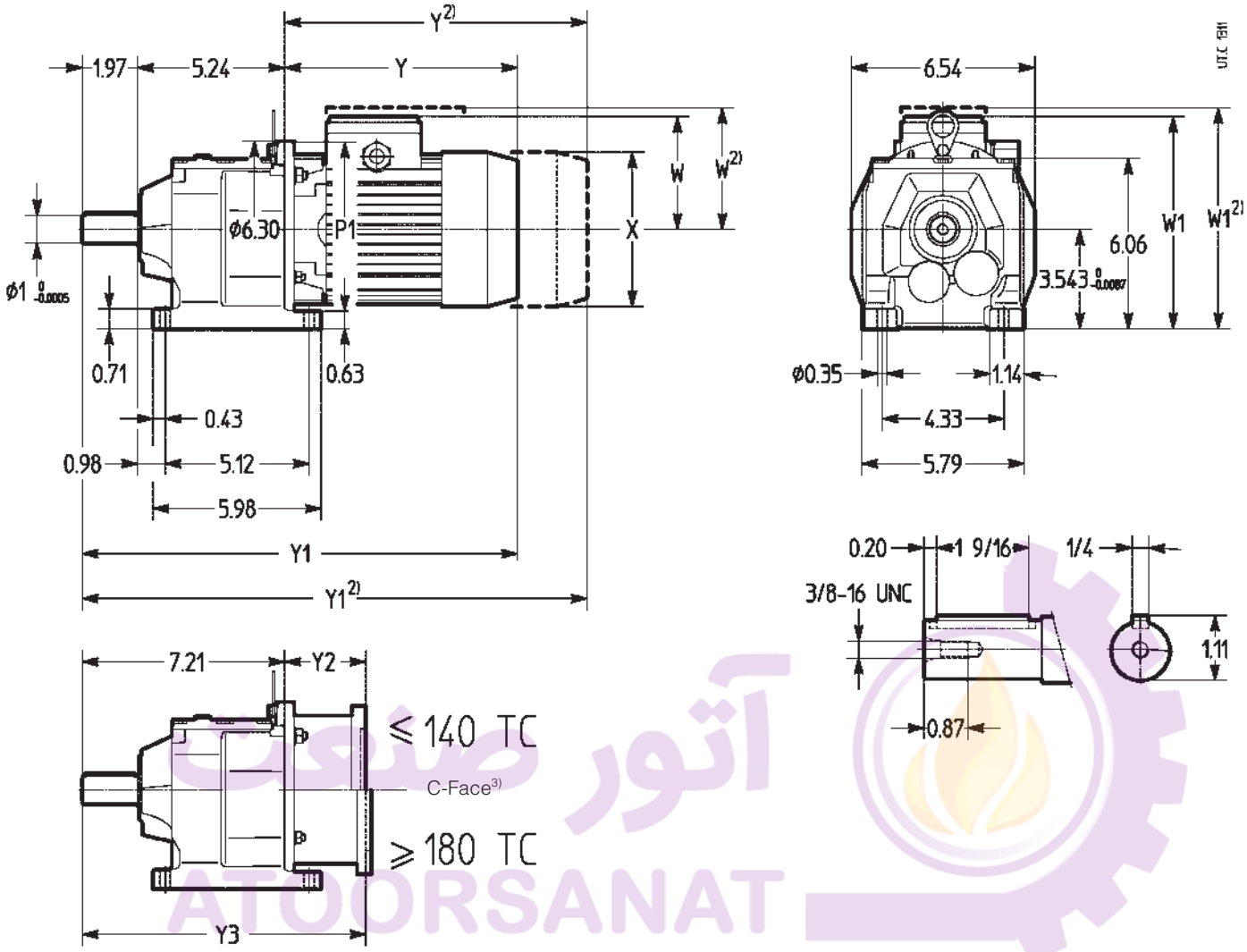

Motor size			P1 Ø	X Ø ≈		Y ≈		Y1 ≈		W ≈		W1 ≈		NEMA C-Face adapter3) Code	Y2	Y3 ≈
		1)			2)		2)		2)		2)		2)			
63	**A**	**B5**	5.51	4.84	4.80	7.80	9.02	15.00	16.22	4.33	4.09	7.87	7.64	–	–	–
	B	**B5**	5.51											MPN 63 B5 - 56 C4)	2.70	9.90
		BX1	6.30			7.36		14.57		3.62		7.17		MPN 63 BX1 - 56 C		
	C	**B5**	5.51			7.80		15.00		4.33		7.87		MPN 63 B5 - 56 C		
		BX1	6.30			7.36		14.57		3.62		7.17		MPN 63 BX1 - 56 C		
71		**B5**	6.30	5.51	5.51	9.06	10.83	16.26	18.03	4.65	4.49	8.19	8.03	MPN 71 B5 - 56 C	2.70	9.90
		BX2				8.35		15.55		4.02		7.56		MPN 71 BX2 - 56 C		
80		**B5A**	6.30	6.26	6.26	9.84	12.80	17.05	20.00	4.45	5.08	7.99	8.62	MPN 80 B5A - 56 C	2.70	9.90
		B5R				10.71		17.91		5.39		8.94		MPN 71 B5 - 56 C		
90	**L**	**B5B**	6.30	6.97	6.97	11.10	14.49	18.31	21.69	5.04	5.67	8.58	9.21	MPN 80 B5A - 140 TC	2.70	9.90
	LB	**B5B**												–	–	–
	LC	**B5B**												MPN 90 B5B - 180 TC	3.35	10.55
100	**LB5)**	**B5C**	6.30	8.03	8.03	13.31	17.36	20.51	24.57	6.02	5.98	10.04	10.00	MPN 90 B5B - 180 TC	3.35	10.55

1) Motor mounting position (see ch. 2b)
2) Values valid for F0 brake motor.
3) Available on request: for further dimensions and details see ch. 12.
4) Not available for 63B 6 motor.
5) Motor housing projects below the foot mounting surface: in this case W1 dimension is referred to motor housing.

Size **3**

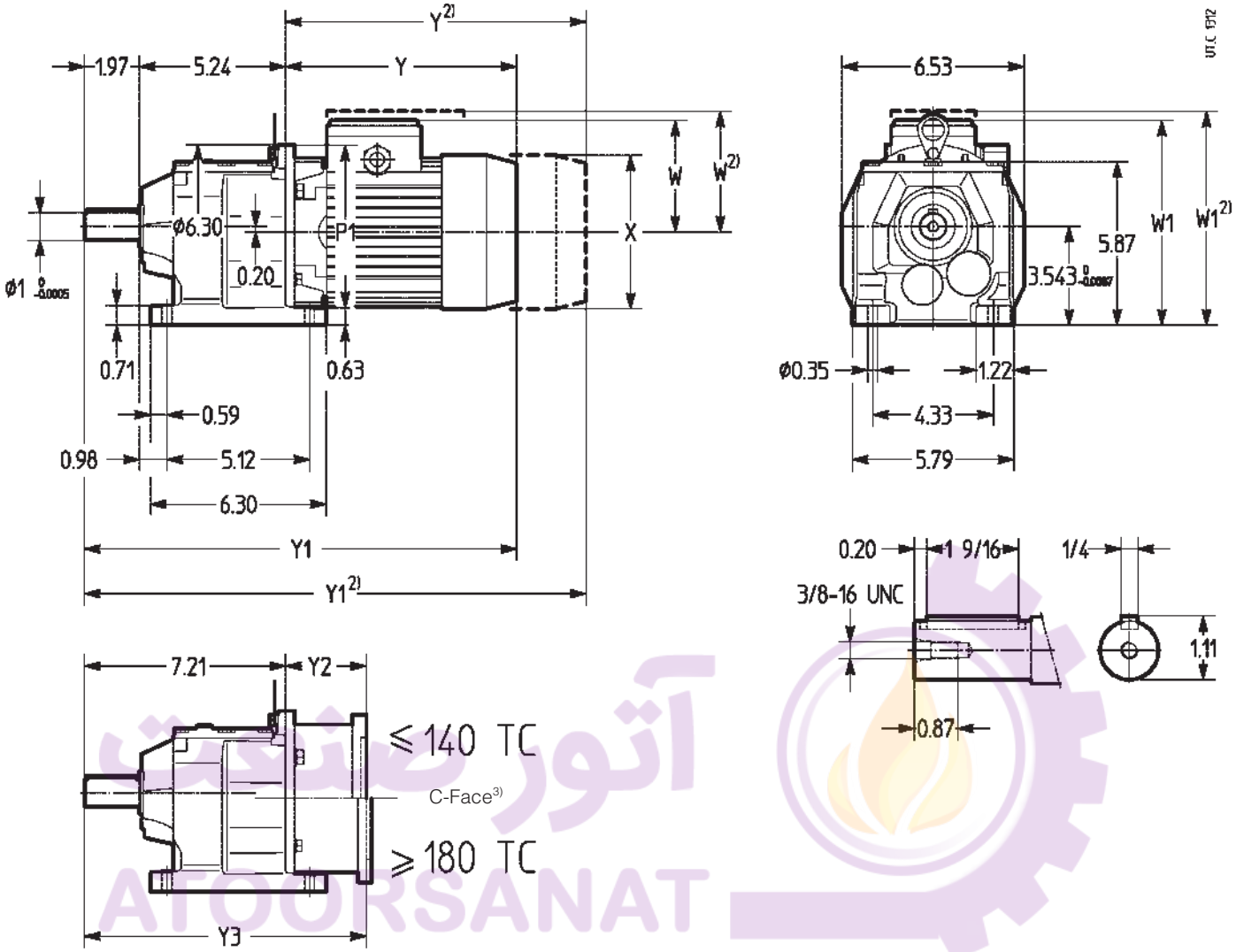

Motor size			P1 Ø	X Ø ≈		Y ≈		Y1 ≈		W ≈		W1 ≈		NEMA C-Face adapter3) Code	Y2	Y3 ≈
		1)			2)		2)		2)		2)		2)			
63	**A**	**B5**	5.51	4.84	4.80	7.76	9.02	15.00	16.22	4.33	4.09	7.68	7.44	–	–	–
	B	**B5**												MPN 63 B5 - 56 C4)	2.70	9.90
	C	**B5**												MPN 63 B5 - 56 C		
71		**B5**	6.30	5.51	5.51	9.06	10.83	16.26	18.03	4.65	4.49	7.99	7.83	MPN 71 B5 - 56 C	2.70	9.90
		BX2				8.35		15.55		4.02		7.36		MPN 71 BX2 - 56 C		
		B5R	5.51			9.06	11.34	16.26	18.54	4.65		7.99		MPN 63 B5 - 56 C		
80		**B5A**	6.30	6.26	6.26	9.84	12.80	17.05	20.00	4.45	5.08	7.80	8.43	MPN 80 B5A - 56 C	2.70	9.90
		B5R				10.71		17.91		4.61		8.74		MPN 71 B5 - 56 C		
90	**L**	**B5B**	6.30	6.97	6.97	11.10	14.49	18.31	21.69	5.04	5.67	8.54	9.17	MPN 80 B5A - 140 TC	2.70	9.90
5)	**LB**	**B5B**												–	–	–
	LC	**B5B**												MPN 90 B5B - 180 TC	3.35	10.55
100	**LB** 5)	**B5C**	6.30	8.03	8.03	13.31	17.36	20.51	24.57	6.02	5.98	10.04	10.00	MPN 90 B5B - 180 TC	3.35	10.55

1) Motor mounting position (see ch. 2b)
2) Values valid for F0 brake motor.
3) Available on request: for further dimensions and details see ch. 12.
4) Not available for 63B 6 motor.
5) Motor housing projects below the foot mounting surface: in this case W1 dimension is referred to motor housing.

Size **4**

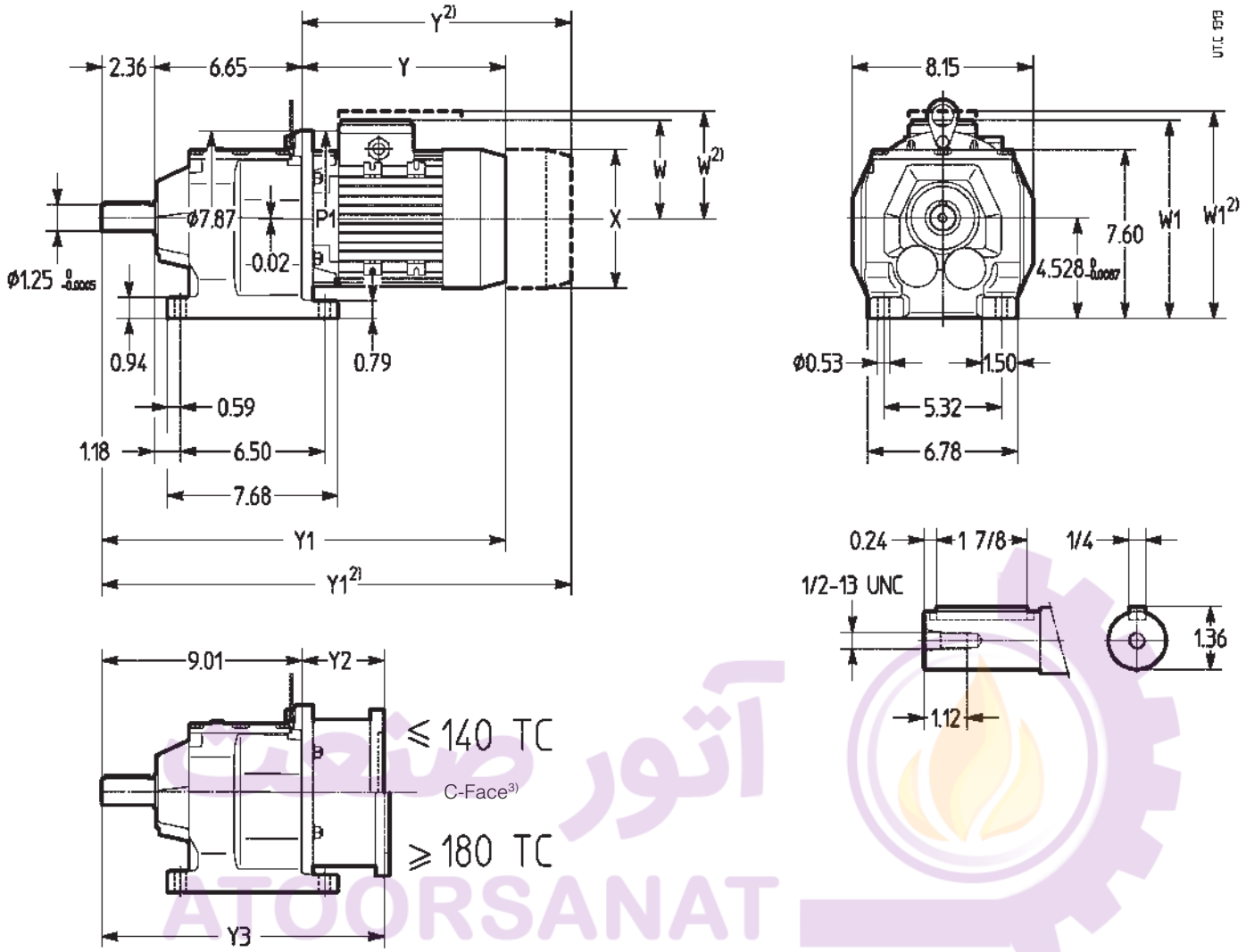

Motor size			P1 Ø	X Ø ≈		Y ≈		Y1 ≈		W ≈		W1 ≈		NEMA C-Face adapter3) Code	Y2	Y3 ≈
		1)			2)		2)		2)		2)		2)			
63	**A**	**BX1**	6.30	4.80	4.80	7.36	9.02	16.38	18.03	3.62	4.09	8.15	8.58	–	–	–
	B	**BX1**			5.51									MPN 63 BX1 - 56 C4)	2.70	11.71
71		**B5**	6.30	5.51		9.06	10.83	18.07	19.84	4.65	4.49	9.17	8.98	MPN 71 B5 - 56C	2.70	11.71
		BX5				8.35		17.36		4.02		8.54		MPN 71 BX5 - 56 C		
		BX2												MPN 71 BX2 - 56 C		
80		**B5**	7.87	6.26	6.26	9.92	12.09	18.94	21.10	5.39	5.08	9.92	9.57	MPN 80 B5 - 56 C	2.70	11.71
		B5R	6.30			10.71	12.80	19.72	21.81					MPN 71 B5 - 56 C		
90	**S**	**B5**	7.87	6.89	6.26	10.31	12.09	19.33	21.10	5.67	5.08	10.20	9.57	MPN 90 B5 - 56 C	2.70	11.71
	L	**B5**		6.97	6.97	10.34	13.98	20.35	22.99	5.67	5.67	10.20	10.16	MPN 90 B5 - 140 TC		
		B5R												MPN 90 B5R - 140 TC		
	LB	**B5**												–	–	–
		B5R				12.52		21.54						–		
	LC	**B5**				12.52		21.54						MPN 90 B5 - 180 TC	3.35	12.36
		B5R												MPN 90 B5R - 180 TC		
100	**LB**	**B5R**	7.87	8.74	8.03	15.00	17.36	24.02	26.38	6.02	5.98	11.34	10.47	MPN 90 B5 - 180 TC	3.35	12.36
112	**M**	**B5R**	7.87	8.74	8.03	14.21	17.36	23.23	26.38	6.02	5.98	11.34	10.47	–	–	–
	MC	**B5R**				15.59	18.39	24.61	27.40					MPN 100 B5R - 210 TC	4.04	13.05

1) Motor mounting position (see ch. 2b)
2) Values valid for F0 brake motor.
3) Available on request: for further dimensions and details see ch. 12.
4) Not available for 63B 6 motor.

Size **5**

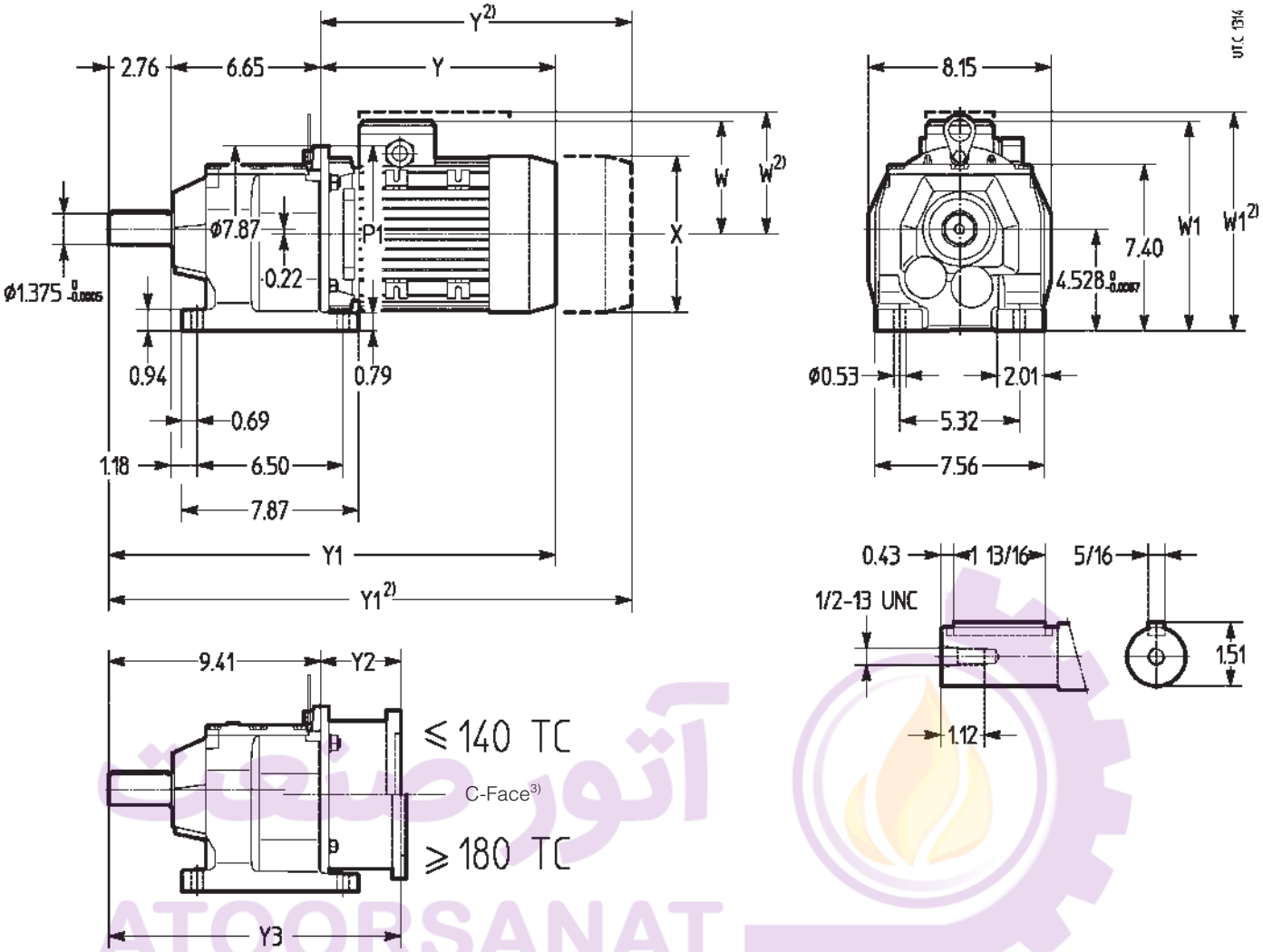

Motor size			P1 Ø	X Ø	≈ 2)	Y	≈ 2)	Y1	≈ 2)	W	≈ 2)	W1	≈ 2)	NEMA C-Face adapter3) Code	Y2	Y3 ≈
		1)														
63		**BX1**	6.30	4.80	4.80	7.36	9.02	16.77	18.43	3.62	4.09	7.95	8.43	MPN 63 BX1 - 56 C	2.70	12.11
71		**B5**	6.30	5.51	5.51	9.06	10.83	18.46	20.24	4.65	4.49	8.98	8.82	MPN 71 B5 - 56 C	2.70	12.11
		BX2				8.35		17.76		4.02		8.35		MPN 71 BX2 - 56 C		
80		**B5**	7.87	6.26	6.26	9.92	12.09	19.33	21.50	5.39	5.08	9.72	9.41	MPN 80 B5 - 56 C	2.70	12.11
		B5R	6.30			10.71	12.80	20.12	21.50					MPN 71 B5 - 56 C		
90	**S**	**B5**	7.87	6.26	6.26	10.31	12.09	19.72	21.50	5.67	5.08	10.00	9.41	MPN 90 B5 - 56 C	2.70	12.11
	L	**B5**		6.89	6.97	11.34	13.98	20.75	23.39	5.67	5.67	10.00	10.00	MPN 90 B5 - 140 TC		
		B5R												MPN 90 B5R - 140 TC		
	LB	**B5**												–	–	–
		B5R				12.52		21.93						–		
	LC	**B5**				12.52		21.93						MPN 90 B5 - 180 TC	3.35	12.76
		B5R												MPN 90 B5R - 180 TC		
100	**LB**	**B5R**	7.87	8.74	8.03	15.00	17.36	24.41	26.77	6.81	5.98	11.18	10.31	MPN 90 B5 - 180 TC	3.35	12.76
		B5S		8.03		13.31		22.72		6.02		10.35		MPN 90 B5R - 180 TC		
112	**M**	**B5R**	7.87	8.74	8.03	14.21	17.36	23.62	26.77	6.81	5.98	11.18	10.31	–	–	–
5)	**MC**	**B5R**				15.59	18.39	25.00	27.80					MPN 100 B5R - 210 TC	4.04	13.44
132	**M** 5)	**B5S**	7.87	10.16	10.16	16.50	20.98	25.91	30.39	7.76	7.68	12.83	12.76	MPN 100 B5R - 210 TC	4.04	13.44

1) Motor mounting position (see ch. 2b)
2) Values valid for F0 brake motor.
3) Available on request: for further dimensions and details see ch. 12.
5) Motor housing projects below the foot mounting surface: in this case W1 dimension is referred to motor housing.

Size **6**

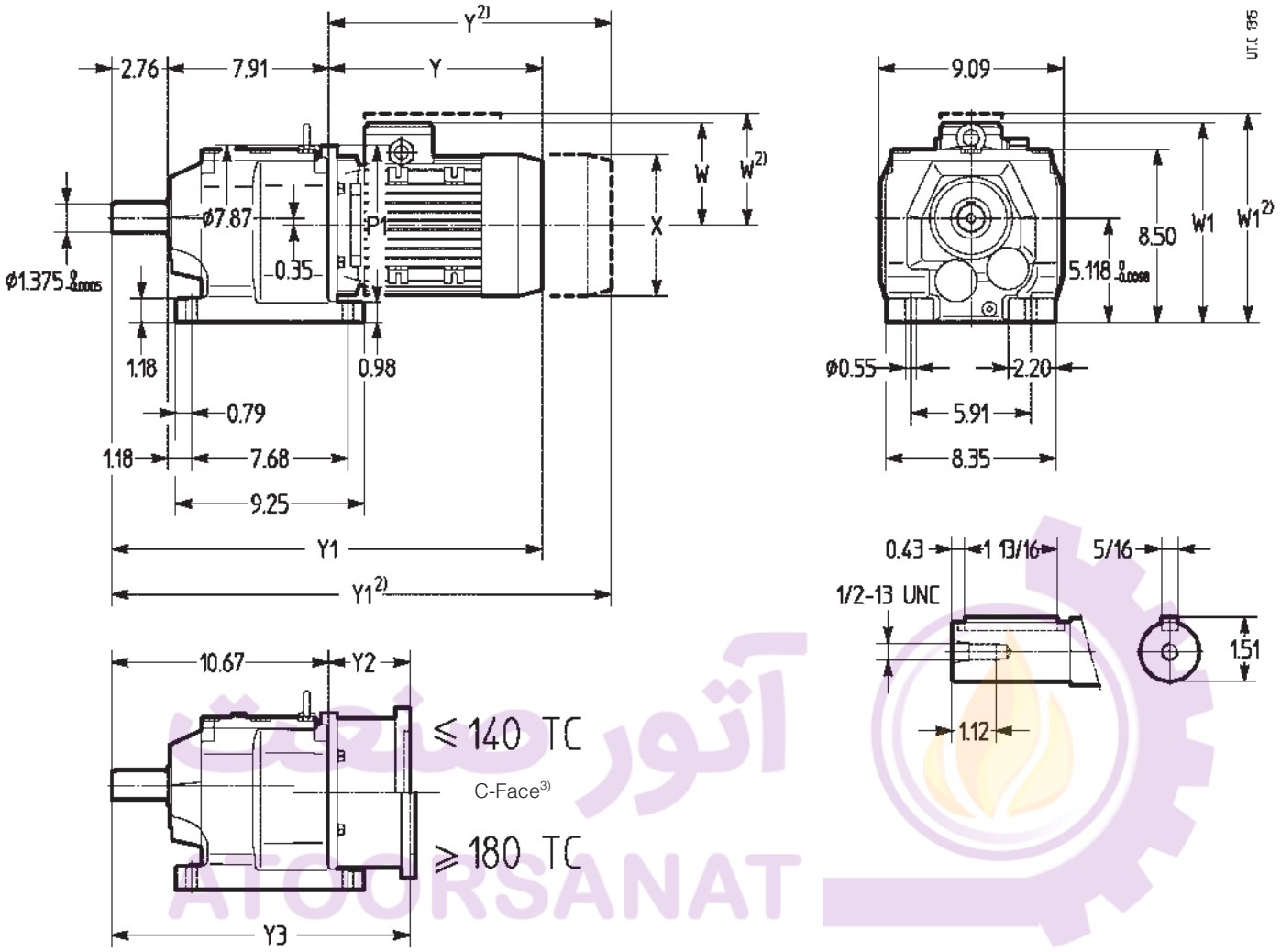

Motor size			P1 Ø	X Ø ≈		Y ≈		Y1 ≈		W ≈		W1 ≈		NEMA C-Face adapter3) Code	Y2	Y3 ≈
		1)			2)		2)		2)		2)		2)			
71		**BX5**	6.30	5.51	5.51	8.35	10.83	19.02	21.50	4.02	4.49	8.78	9.25	MPN 71 BX5 - 56 C	2.70	13.37
80		**B5**	7.87	6.26	6.26	9.92	12.09	20.59	22.76	5.39	5.08	10.16	9.84	MPN 80 B5 - 56 C	2.70	13.37
90	**S**	**B5**	7.87	6.89	6.26	10.31	12.09	20.98	22.76	5.67	5.08	10.43	9.84	MPN 90 B5 - 56 C	2.70	13.37
	L	**B5**		6.97	6.97	11.34	13.98	22.01	24.65	5.67	5.67	10.43	10.43	MPN 90 B5 - 140 TC		
		B5R												MPN 90 B5R - 140 TC		
	LB	**B5**												–	–	–
		B5R				12.52		23.19						–		
	LC	**B5**				12.52		23.19						MPN 90 B5 - 180 TC	3.35	14.02
		B5R												MPN 90 B5R - 180 TC		
100	**LB**	**B5R**	7.87	8.74	8.03	15.00	17.36	25.67	28.03	6.81	5.98	11.57	10.75	MPN 90 B5 - 180 TC	3.35	14.02
		B5S		8.03		13.31		23.98		6.02		10.79		MPN 90 B5R - 180 TC		
112	**M**	**B5R**	7.87	8.74	8.03	14.21	17.36	24.88	28.03	6.81	5.98	11.57	10.75	–	–	–
	MC	**B5R**				15.59	18.39	26.26	29.06					MPN 100 B5R - 210 TC	4.04	14.70
132	**M** 5)	**B5S**	7.87	10.16	10.16	16.50	20.98	27.17	31.65	7.76	7.68	12.83	12.76	MPN 100 B5R - 210 TC	4.04	14.70

1) Motor mounting position (see ch. 2b)
2) Values valid for F0 brake motor.
3) Available on request: for further dimensions and details see ch. 12.
5) Motor housing projects below the foot mounting surface: in this case W1 dimension is referred to motor housing.

Size **7**

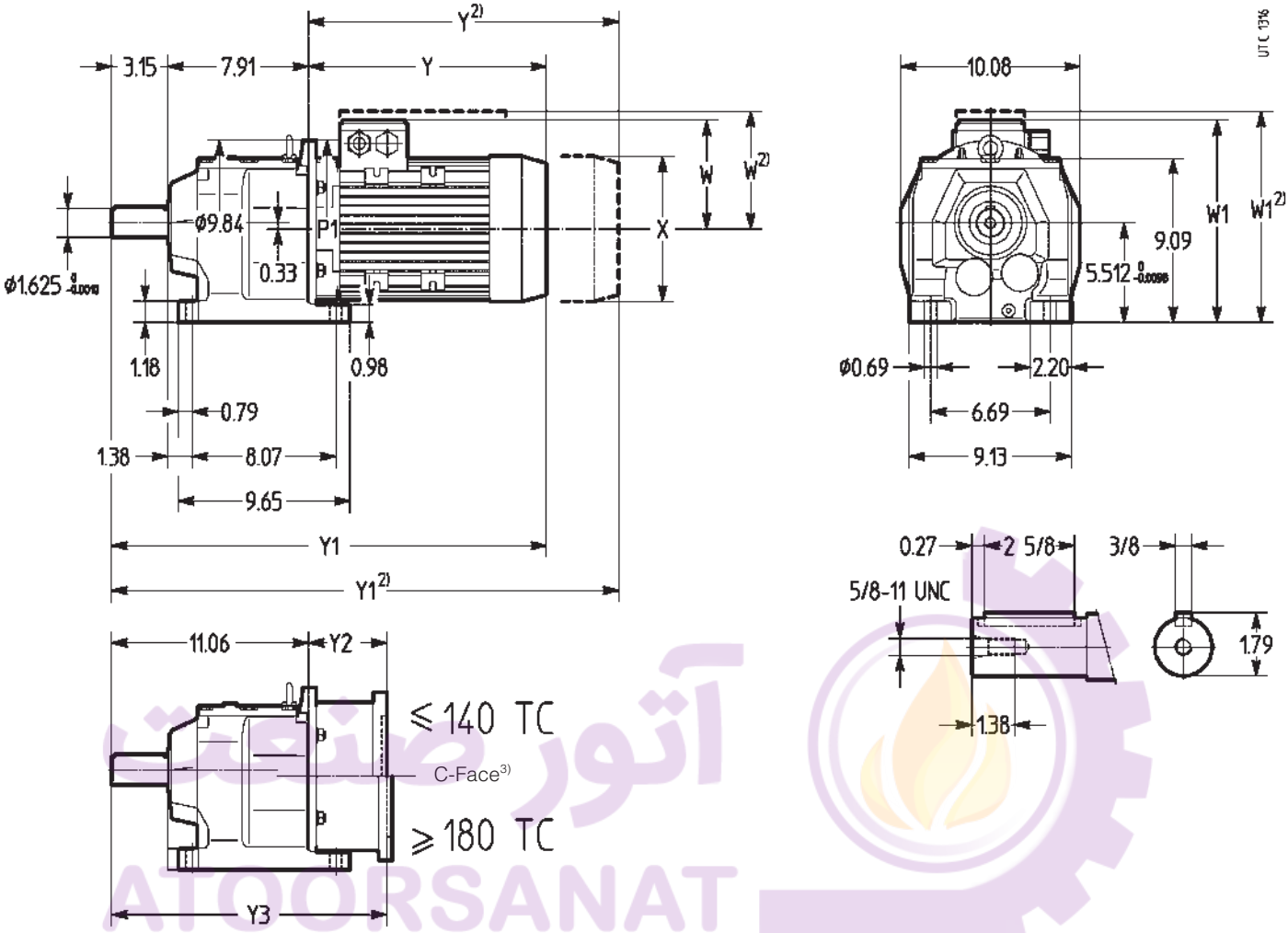

Motor size			P1 Ø	X Ø ≈		Y ≈		Y1 ≈		W ≈		W1 ≈		NEMA C-Face adapter3) Code	Y2	Y3 ≈
		1)			2)		2)		2)		2)		2)			
71		**BX1**	7.87	5.51	5.51	8.35	10.83	19.41	21.89	4.02	4.49	9.21	9.69	MPN 71 BX1 - 56 C	2.70	13.76
80		**B5**	7.87	6.26	6.26	9.92	12.09	20.98	23.15	5.39	5.08	10.59	10.28	MPN 80 B5 - 56 C	2.70	13.76
		BX2				9.13		20.20		4.45		9.65		MPN 80 BX2 - 56 C		
90	**S**	**B5**	7.87	6.89	6.26	10.31	12.09	21.38	23.15	5.67	5.08	10.87	10.28	MPN 90 B5 - 56 C	2.70	13.76
	L	**B5**		6.97	6.97	11.34	13.98	22.40	25.04	5.67	5.67	10.87	10.87	MPN 90 B5 - 140 TC		
		B5R												MPN 90 B5R - 140 TC		
	LB	**B5**												–	–	–
	LC	**B5**				12.52		23.58						MPN 90 B5 - 180 TC	3.35	14.41
100	**LA**	**B5**	9.84	8.74	8.03	13.19	16.50	24.25	27.56	6.81	5.98	12.01	11.18	MPN 100 B5 - 180 TC	3.35	14.41
	LB	**B5**												MPN 100 B5 - 180 TC		
		B5R	7.87			15.00	17.36	26.06	28.43					MPN 90 B5 - 180 TC		
112	**M**	**B5**	9.84	8.74	8.03	13.35	16.50	24.41	27.56	6.81	5.98	12.01	11.18	–	–	–
		B5R	7.87			14.21	17.36	25.28	28.43					–		
	MC	**B5**	9.84			13.98	17.52	25.04	28.58					MPN 100 B5 - 210 TC	4.04	15.10
132	**M**	**B5R**	9.84	10.16	10.16	16.34	20.79	27.40	31.85	7.76	7.68	12.95	12.87	MPN 100 B5 - 210 TC	4.04	15.10
	MB	**B5R**				17.80	22.28	28.86	33.35					–	–	–
	MC	**B5R**												MPN 132 B5R - 250 TC	4.74	15.81

1) Motor mounting position (see ch. 2b)
2) Values valid for F0 brake motor.
3) Available on request: for further dimensions and details see ch. 12.

Efficiency η

– gear reducer with 2 gear stages (2I) 0.98, with 3 gear pairs (3I) 0.96; for $T_2 << T_{N2}$, η could considerably decrease; consult us. T_2 values stated on ch. 8 already include efficiency; if motor is supplied by the Customer, the torques generated on low speed shaft could be smaller or currents absorbed greater.

Overloads

Where a gear reducer is subjected to high static and dynamic overloads, the need arises for verifying that such overloads will always remain lower than $\mathbf{2 \cdot T_{N2}}$ (see ch. 8 where $T_{N2} = T_2 \cdot fs$).
Overloads are normally generated when one has:
– starting on full load (especially for high inertias and low transmission ratios), braking, shocks;
– gear reducers in which the low speed shaft becomes driving member due to driven machine inertia;
– applied power higher than that required; other static or dynamic causes.
The following general observations on overloads are accompanied by some formula for carrying out evaluations in certain typical instances.
Where no evaluation is possible, install safety devices which will keep values within $\mathbf{2 \cdot T_{N2}}$.

Starting torque

When starting on full load (especially for high inertias and low transmission ratios) verify that $\mathbf{2 \cdot T_{N2}}$ is equal to or greater than starting torque, by using the following formula:

$$T_2\,\text{start} = \left(\frac{T\,\text{start}}{T_N} \cdot T_2\,\text{available} - T_2\,\text{required}\right) \frac{WK^2_R}{WK^2_R + WK^2_0} + T_2\,\text{required}$$

where:
Tstart is the motor starting torque (see ch.2);
T_N is the motor nominal torque (see ch. 2b);
T_2 available is output torque due to the motor's nominal power;
T_2 required is torque absorbed by the machine through work and frictions;
WK^2_0 is the moment of inertia (of mass) of the motor (see ch. 2b)
WK^2_R is the external moment of inertia (of mass; coupling, driven machine) reflected to the motor shaft (see ch. 2b)

NOTE: when seeking to verify that starting torque is sufficiently high for starting, take into account starting friction, if any, in evaluating T_2 required.

Stopping machines with high kinetic energy (high moments of inertia combined with high speeds) with brake motor

Verify braking stress by means of the formula:

$$\left(\frac{T_{brake}}{\eta} \cdot i + T_{2\ \text{required}}\right) \frac{WK^2_R}{WK^2_R + WK^2_0} - T_{2\ \text{required}} \leq 2 \cdot T_{N2}$$

where:
T_{brake} is the braking torque setting of the motor (see ch. 2b); for other symbols see above

Frequency of starting z

As a general rule, the maximum permissible frequency of starting z for direct on-line start (maximum starting time 0.5 ÷ 1 s) is 63 starts/h up to size 90, 32 starts/h for sizes 100 … 132.
Brake motors can withstand a starting frequency double that of normal motors as described above.
A greater frequency of starting z is often required for brake motors. In this case it is necessary to verify that:

$$z \leq z_0 \cdot \frac{WK^2_R}{WK^2_R + WK^2_0} \cdot \left[1 - \left(\frac{P}{P_1}\right)^2 \cdot 0.6\right]$$

where: P is the power absorbed by the machine referred to the motor shaft (therefore taking into account efficiency); for other symbols see above.
If during starting the motor has to overcome a resisting torque, verify the frequency of starting by means of the following formula:

$$z \leq 0.63 \cdot z_0 \cdot \frac{WK^2_R}{WK^2_R + WK^2_0} \cdot \left[1 - \left(\frac{P}{P_1}\right)^2 \cdot 0.6\right]$$

Operation with brake motor

Starting time ta **and revolutions of motor** φa_1

$$ta = \frac{(WK^2_0 + WK^2_R) \cdot n_1}{25.603\left(T\,\text{start} - \frac{T_2\,\text{required}}{i}\right)}\ [s]; \qquad \varphi a_1 = \frac{ta \cdot n_1}{19.1}\ [rad]$$

Braking time tb **and revolutions of motor** φb_1

$$tb = \frac{(WK^2_0 + WK^2_R) \cdot n_1}{25.603\left(T\,\text{brake} - \frac{T_2\,\text{required}}{i}\right)}\ [s]; \qquad \varphi b_1 = \frac{tb \cdot n_1}{19.1}[rad]$$

for symbols see above.

Assuming a regular air-gap and ambient humidity, and utilizing suitable electrical equipment, repetition of the braking action, as affected by variation in temperature of the brake and by the state of wear of friction surface, is approx ± 0.1 · φb1.

Low speed shaft angular backlash and torsional stiffness

A rough guide for the angular backlash (high speed shaft being locked) is given in the table. Values vary according to temperature and transmission ratio.
Also the approx. values for low speed shaft torsional stiffness – high speed shaft being locked – are given in the table according to the train of gears.

Gear reducer size	Angular backlash [rad]1)		Torsional stiffness [lbf in]2)	
	min	max	**MR 2I**	**MR 3I**
0	0.0050	0.0100	14.2	8.0
1	0.0045	0.009	31.4	17.7
2	0.0036	0.0071	66	38.1
3	0.0036	0.0071	75	42.5
4	0.0032	0.0063	133	75
5	0.0032	0.0063	150	84
6	0.0028	0.0056	266	150
7	0.0028	0.0056	296	168

1) 1 rad = 3438 arcmin.
2) Values valid in condition of nominal load.

Fixing bolt dimensions for gear reducer feet

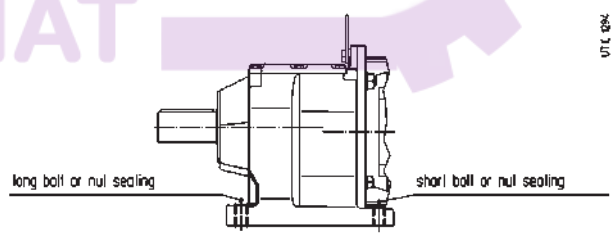

Gear reducer size	Long bolt (l max)		Short bolt (l max)	
	ANSI B18.2.1 class 5	UNI 5737-88 UNI 5739-88 class 8.8	ANSI B18.2.1 class 5	UNI 5737-88 UNI 5739-88 class 8.8
0	1/4 - 20 × 7/8	M 6 × 22	1/4 - 20 × 7/8	M 6 × 22
1	5/16 - 18 × 1¼	M 8 × 30	5/16 - 18 × 1	M 8 × 25
2	5/16 - 18 × 1¼	M 8 × 35	5/16 - 18 × 1¼	M 8 × 30
3	5/16 - 18 × 1¼	M 8 × 35	5/16 - 18 × 1¼	M 8 × 30
4	7/16 - 14 × 1¾	M12 × 45	7/16 - 14 × 1½	M12 × 40
5	7/16 - 14 × 1¾	M12 × 45	7/16 - 14 × 1½	M12 × 40
6	7/16 - 14 × 2	M12 × 55	7/16 - 14 × 2	M12 × 50
7	5/8 - 11 × 2¼	M16 × 60	5/8 - 11 × 2¼ 1)	M16 × 55 2)

1) 5/8 - 11 x 2 for motor 132 B5R.
2) M16 x 50 for motor 132 B5R.

11 - Installation and maintenance

General

Be sure that the structure on which the gearmotor is fitted is flat, levelled and sufficiently dimensioned in order to assure fitting stability and absence of vibration, keeping in mind all transmitted forces due to the masses, to the torque, to the radial and axial loads.

Position the gearmotor so as to allow a free passage of air for cooling both gear reducer and motor (especially at motor fan side).

Avoid: any obstruction to the air-flow; heat sources near the gearmotor that might affect the temperature of cooling-air and of gearmotor for radiation; insufficient air recycle or any other factor hindering the steady dissipation of heat.

Mount the gearmotor so as not to receive vibrations.

When external loads are present use pins or locking blocks, if necessary.

When fitting gearmotor and machine it is recommended to use **locking adhesives** such as LOCTITE on the fastening screws.

For outdoor installation or in a hostile environment protect the gearmotor with anticorrosion paint. Added protection may be afforded by water-repellent grease (especially around the rotary seating of seal rings and the accessible zones of shaft end).

Gearmotors should be protected wherever possible, and by whatever appropriate means, from solar radiation and extremes of weather; weather protection **becomes essential** for V5 and V6 mounting positions.

For ambient temperatures greater than 104 °F (40 °C) or less than 32 °F (0 °C), consult us.

Before wiring-up the gearmotor, make sure that motor voltage corresponds to input voltage. If the direction of rotation is not as desired, invert two phases at the terminals.

If overloads are imposed for long periods of time, or if shocks or danger of jamming are envisaged, then motor-protections, electronic torque limiters, fluid couplings, safety couplings, control units or other suitable devices should be fitted.

Where duty cycles involve a high number of starts on-load, it is advisable to utilize **thermal probes** (fitted on the wiring) for motor protection; a thermal overload relay is unsuitable since its threshold must be set higher than the motor's nominal current rating.

Use varistors to limit voltage peaks due to contactors.

Warning! Bearing life, good shaft and coupling running depend also on alignment precision between the shafts. Carefully align the gearmotor with the driven machine (with the aid of shims if need be), interposing flexible couplings whenever possible.

Whenever a leakage of lubricant could cause heavy damages, increase the frequency of inspections and/or envisage appropriate control devices (e.g.: remote oil level gauge, lubricant for food industry, etc.).

In polluting surroundings, take suitable precautions against lubricant contamination through seal rings or other.

For brake or non-standard motors, consult us for specific information.

Fitting of components to low speed shaft ends

For the **bore** of **parts** keyed to the low speed shaft end the following **tolerances** are recommended (according to load classification):

Gear reducer size	Low speed shaft diameter ØU		**Bore** recommended tolerances Load cl. **I**	Load cl. **II, III**
0	0.75	+0 / - 0.0005	+0.0006 / +0	+0.0008 / - 0.0005
1	0.75	+0 / - 0.0005	+0.0016 / +0	+0.0010 / - 0.0006
2	1	+0 / - 0.0005	+0.0016 / +0	+0.0010 / - 0.0006
3	1	+0 / - 0.0005	+0.0016 / +0	+0.0010 / - 0.0006
4	1.25	+0 / - 0.0005	+0.0020 / +0	+0.0013 / - 0.0007
5	1.375	+0 / - 0.0005	+0.0020 / +0	+0.0013 / - 0.0007
6	1.375	+0 / - 0.0005	+0.0020 / +0	+0.0013 / - 0.0007
7	1.625	+0 / - 0.0005	+0.0020 / +0	+0.0013 / - 0.0007

Before mounting, clean mating surfaces thoroughly and lubricate against seizure and fretting corrosion. Installing and removal operations should be carried out with **pullers** and **jacking screws** using the tapped hole at the shaft butt-end.

IEC frame motor mounting or replacement

For **IEC frame motor** mounting simply observe the following instructions:

- ensure that the mating surfaces are machined under «standard» rating (UNEL 13501-69; DIN 42955) at least;
- clean surfaces to be fitted, thoroughly;
- check, and, if necessary, lower the parallel key so as to leave a clearance of 0.004 ÷ 0.008 in (0.1 ÷ 0.2 mm) between its tip and the bottom of the keyway of the hole; when shaft keyway is without end, lock the key with a pin;
- check, if necessary that the fit-tolerance of bore-and-shaft end (standard locking) is K6/j6; the length of the parallel key is to be at least 0.9 the face width of the pinion;
- ensure that motor bearings are equivalent, in terms of load ratings, to the ones shown in the table according to motor size;

Motor size	Drive end bearing
56	6201
63	6201
71	6202
80	6204
90S	6005
90L	6205
100, 112	6206 (≤ 5.4 hp, 4 poles); 6306
132	6208 (≤ 10 hp, 4 poles); 6308

- mount the spacer (with rubber cement; check that between keyway and motor shaft shoulder there is a ground cylindrical part of at least 0.06 in) and the pinion (the latter to be preheated to a temperature of 176 ÷ 212 °F (80 ÷100 °C)) on the motor, locking the assembly with either a bolt to the shaft butt-end, or a stop collar;
- mount the possible fitting-ring for motor centering onto gear reducer motor mounting flange;
- lubricate the pinion toothing, and the sealing ring and its rotary seating with grease, assembling carefully.

For other details regarding motor mounting, see specific information and/or consult us.

The replacement of a motor supplied by us with an IEC frame motor[1] of **the same power** supplied by the Customer **is possible** only for motors in **mounting position B5**.

However, if need be and accepting a reducer machine duty cycle, it is possible to replace the motors in mounting position **B5 with power or motor power-to-size correspondence not according to standard, B5R** and **B5S** with motors standardized to IEC of smaller power and size, if possible, having mating dimensions as stated in ch. 8.

1) NEMA C-Face motors may be fitted in combination with an adapter device supplied as accessory (see ch. 13 for dimensions and possible combination).

NEMA C-Face adapter

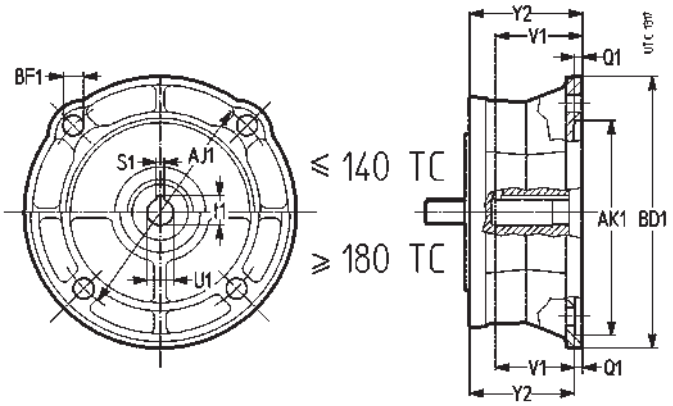

Cast iron casing device transforming gearmotor IEC input side into NEMA C-Face mating dimensions.
Dimensions and supplementary **designation code** when **ordering** as per table below.

Designation code	NEMA C-Face input side frame size	U1 Ø +0.0010 0	V1	S1 +0.0020 0	t1	BF1 Ø	AJ1 Ø	AK1 Ø +0.0010 - 0.0007	BD1 Ø	Q1	Y2	Weight lb
MPN 63 B5 - 56 C	56 C	0.625	2.06	0.188	0.709	0.43	5.875	4.5	6.5	0.2	2.7	6.9
MPN 63 BX1 - 56 C	56 C											7.4
MPN 71 B5 - 56 C	56 C	0.625	2.06	0.188	0.709	0.43	5.875	4.5	6.5	0.2	2.7	7.5
MPN 71 B5A - 56 C	56 C											6.9
MPN 71 BX1 - 56 C	56 C											9.5
MPN 71 BX2 - 56 C	56 C											7.4
MPN 71 BX5 - 56 C	56 C											7.5
MPN 80 B5 - 56 C	56 C	0.625	2.06	0.188	0.709	0.43	5.875	4.5	6.5	0.2	2.7	9.6
MPN 80 B5A - 56 C	56 C											7.6
MPN 80 BX2 - 56 C	56 C											9.5
MPN 80 B5A - 140 TC	140 TC	0.875	2.12		0.964							7.4
MPN 90 B5 - 56 C	56 C	0.625	2.06	0.188	0.709	0.43	5.875	4.5	6.5	0.2	2.7	9.8
MPN 90 B5 - 140 TC	140 TC	0.875	2.12		0.964							9.6
MPN 90 B5R - 140 TC	140 TC											9.4
MPN 90 B5 - 180 TC	180 TC	1.125	2.62	0.25	1.241	0.56	7.25	8.5	9	0.22	3.35	17.1
MPN 90 B5R - 180 TC	180 TC											16.9
MPN 90 B5B - 180 TC	180 TC											14.7
MPN 100 B5 - 180 TC	180 TC	1.125	2.62	0.25	1.241	0.56	7.25	8.5	9	0.22	3.35	20.5
MPN 100 B5 - 210 TC	210 TC	1.375	3.12	0.312	1.518						4.04	23.9
MPN 100 B5R - 210 TC	210 TC											20.3
MPN 132 B5R - 250 TC	250 TC	1.625	3.75	0.375	1.796	0.56	7.25	8.5	10	0.22	4.74	30.4

Gear reducers

Cat. **A**
Worm gear reducers and gearmotors

Cat. **E**
Universal coaxial gear reducers and gearmotors

Cat. **EP**
Planetary gear reducers and gearmotors

Cat. **G**
Parallel and right angle shaft gear reducers and gearmotors

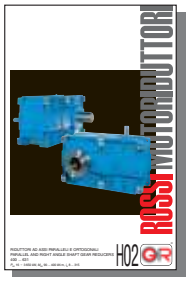

Cat. **H**
Parallel and right angle shaft gear reducers

Cat. **L**
Right angle shaft gear reducers

Cat. **P**
Shaft mounted gear reducers

Gearmotors

Cat. **A**
Worm gear reducers and gearmotors

Cat. **AS**
STUDAUFFT
Worm gearmotors

Cat. **E**
Universal coaxial gear reducers and gearmotors

Cat. **ES**
STUDAUFFT
Coaxial gearmotors

Cat. **EP**
Planetary gear reducers and gearmotors

Cat. **G**
Parallel and right angle shaft gear reducers and gearmotors

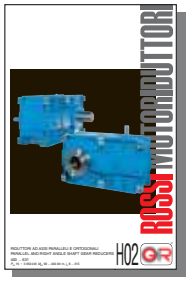

Cat. **H**
Parallel and right angle shaft gear reducers

Cat. **L**
Right angle shaft gear reducers

Cat. **P**
Shaft mounted gear reducers

Automation

Cat. **I**
Inverter

Cat. **TI**
Integrated motor-inverter

Cat. **SR**
Synchronous and asynchronous servogearmotors

Cat. **SM**
Integrated low backlash planetary servogearmotors
Synchronous and asynchronous servomotors

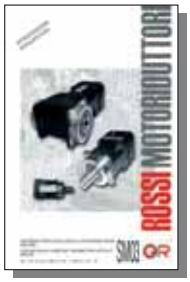

Cat. **SM integration**
Low backlash planetary gearmotors without motor

Motor

Cat. **TX**
Asynchronous three-phase, brake motors and for roller ways

Catalogs for North America and China: please visit our website *www.rossi-group.com*

Worldwide Sales and Service Network

AUSTRALIA

ROSSI GEARMOTORS AUSTRALIA Pty. Ltd.
AU - PERTH WA
Phone +61 8 94557399
fax +61 8 94557299
e-mail: info.australia@rossi-group.com
www.rossigearmotors.com.au

ROSSI GEARMOTORS AUSTRALIA Pty. Ltd
AU - VICTORIA 3805
Phone +61 3 9705 6066
fax +61 3 9705 6043
e-mail: info.australia@rossi-group.com
www.rossigearmotors.com.au

ROSSI GEARMOTORS AUSTRALIA Pty. Ltd.
AU - SYDNEY NSW
Phone. +61 2 9723 0600
fax +61 2 9723 0611
e-mail : info.australia@rossi-group.com
www.rossigearmotors.com.au

CANADA

ROSSI GEARMOTORS
Division of Habasit Canada Limited
CA - Oakville, Ontario
Phone +1 800 770 6750
fax +1 800 268 2358
e-mail: info.canada@habasit.com
www.rossi-group.com

CHINA

ROSSI GEARMOTORS CHINA P.T.I.
CN - SHANGHAI
Phone +86 21 3350 5345
fax +86 21 3350 6177
e-mail: info.china@rossi-group.com
www.rossigearmotors.cn

DENMARK

ROSSI GEARMOTORS SCANDINAVIA A/S
DK - Frederiksberg
Phone +45 38 11 22 42
fax +45 38 11 22 58
e-mail: info.denmark@rossi-group.com
www.rossigearmotors.dk

FRANCE

ROSSI MOTOREDUCTEURS SARL
FR - GONESSE
Phone +33 1 34539171
fax +33 1 34538107
e-mail: info.france@rossi-group.com
www.rossimotoreducteurs.fr

GERMANY

HABASIT ROSSI GmbH
DE - Eppertshausen
Phone +49 6071 / 969 - 0
fax +49 6071 / 969 -150
e-mail: info.germany@habasitrossi.com
www.habasitrossi.de

ICELAND

ROSSI GEARMOTORS SCANDINAVIA A/S
DK - Frederiksberg
Phone +45 38 11 22 42
fax +45 38 11 22 58
e-mail: info.denmark@rossi-group.com
www.rossigearmotors.dk

INDIA

ROSSI GEARMOTORS Pvt. Ltd.
IN - Coimbatore
Phone +91 422 262 7879
fax +91 422 262 7214
e-mail: info.india@rossi-group.com
www.rossi-group.com

MEXICO

ROSSI GEARMOTORS
A Division of Habasit America
US - Suwanee
Phone +1 800 931 2044
fax +1 678 288 3658
e-mail: rossi.info@us.habasit.com
www.habasitamerica.com

NETHERLANDS

HABASIT NETHERLANDS B.V.
NL - NIJKERK
Phone +31 33 247 20 30
Fax: +31 33 246 15 99
e-mail: netherlands@habasit.com
www.rossi-group.com

NEW ZEALAND

ROSSI GEARMOTORS NEW ZEALAND Ltd.
NZ - Auckland
Phone +61 9 263 4551
fax +61 9 263 4557
e-mail: info.nz@rossi-group.com
www.rossigearmotors.com.au

NORWAY

ROSSI GEARMOTORS SCANDINAVIA A/S
DK - Frederiksberg
Phone +47 38 11 22 42
fax +47 38 11 22 58
e-mail: info.denmark@rossi-group.com
www.rossigearmotors.dk

PORTUGAL

ROSSI MOTORREDUCTORES S.L.
ES - VILADECANS (Barcelona)
Phone +34 93 6377248
fax +34 93 6377404
e-mail: info.spain@rossi-group.com
www.rossimotorreductores.es

SPAIN

ROSSI MOTORREDUCTORES S.L.
ES - VILADECANS (Barcelona)
Phone +34 93 6377248
fax +34 93 6377404
e-mail: info.spain@rossi-group.com
www.rossimotorreductores.es

SWEDEN

ROSSI GEARMOTORS SCANDINAVIA A/S
DK - Frederiksberg
Phone +45 38 11 22 42
fax +45 38 11 22 58
e-mail: info.denmark@rossi-group.com
www.rossigearmotors.dk

SWITZERLAND

HABASIT AG
CH - Reinach - Basel
Phone +41 61 715 15 75
fax +41 61 715 15 56
e-mail: info.ch@habasit.com
www.habasit.ch

TAIWAN

HABASIT ROSSI (TAIWAN) LTD.
TW - TAIPEI HSIEN
Phone +886 2 22670538
fax +886 2 22670578
e-mail: info.hea@habasit.com
www.rossi-group.com

UNITED KINGDOM

HABASIT ROSSI Limited
UK - COVENTRY
Phone +44 2476 644646
fax +44 2476 644535
e-mail: info.uk@habasitrossi.com
www.habasitrossi.co.uk

UNITED STATES

ROSSI GEARMOTORS
A Division of Habasit America
US - Suwanee
Phone +1 800 931 2044
fax +1 678 288 3658
e-mail: rossi.info@us.habasit.com
www.habasitamerica.com

Our Partner

Habasit is the worldwide market leader in the belting industry for power transmission, conveying and processing solutions

habasit

HABASIT AG
Römerstrasse 1
CH - 4153 Reinach - Switzerland
tel. +41 61 715 15 15
fax +41 61 715 15 55
e-mail: info@habasit.com
www.habasit.com

For worldwide sales and service network visit our websites *www.rossi-group.com* and *www.habasit.com*

Manufactured by

Rossi Motoriduttori S.p.A.
Via Emilia Ovest 915/A
41100 Modena – Italy
Phone +39 059 33 02 88
fax +39 059 82 77 74
e-mail: info@rossi-group.com
www.rossi-group.com

Printed in Italy
Publication data:
4037BRO.EST-en0308HQR