Varigear® Variable Speed Drives

SEW EURODRIVE

آتور صنعت
ATOORSANAT

2002 Product Catalog

Infinite Speed Adjustment • Superior Uptime • Long Life • Low Maintenance • Compact Design • Modular Components • Custom Assembled

Table of Contents

NOMENCLATURE 8

GENERAL INFORMATION 10

International SI Units 10

Conversion Table for Commonly Used English - Metric Units 10

Standards and Regulations 11

Abbreviations 12

Code Letters for Locked Rotor kVA 12

Service Factoring Using AGMA Criteria 13

Drive Determination 14

Selection keeping the torque (T_a) constant 14

Selection keeping output horsepower (P_a) constant 15

Selection where both the output power (P_a) and output torque (T_a) are constant 16

Selecting a Drive From this Catalog 17

Tolerances 18

Gearmotor Tolerances 18

AC Motor Tolerances 18

VARIGEAR® NON-GEARED UNITS 19

Introduction 19

Efficiency 19

Output Power and Speed 19

Design Variations 19

Dimension Page Notes 19

Features 20

Selection of VARIGEAR® Service Factors 21

Influence of the Ambient Temperature 21

Influence of the Type of Loading 21

Selection of the Gear Unit Service Factors 22

Load Classification 22

AGMA **22**

VARIGEAR® Selections **24**

Totally Enclosed Non-Ventilated **25**

Dimensions - Foot Mounted **26**

Dimensions - Flange Mounted **28**

VARIGEAR® Options **30**

Remote Digital Speed Indicator - DA 30

Electro Mechanical Remote Speed Control - EF 31

Right Angle Control with Handwheel - H 32

Right Angle Control with Bare Shaft Extension - N 33

Right Angle Control with Mechanical Speed Indicator Mounted In Handwheel - HS 34

Standard Handwheel with Mechanical Speed Indicator - S 35

Brake on Driven Shaft - BM(G)HR 36

Mounting Positions **37**

INTRODUCTION TO VARIGEAR GEARED UNITS **38**

Efficiency **38**

Backdriving (S-Series Only) **38**

Output Power, Torque, and Speed **38**

Design Variations **39**

OHL AND AXIAL SHAFT LOADS **40**

Determination Of Overhung Load - OHL **40**

Permissible Output Shaft Loads **41**

R-Series and F-Series 41

K-Series and S-Series 41

Output OHL Conversion **41**

OHL Ratings Table **42**

Overhung Loads - F_{Ra} - Type "R" **43**

Overhung Loads - F_{Ra} - Type "F" **47**

Overhung Loads - F_{Ra} - Type "K" **50**

Overhung Loads - F_{Ra} - Type "S" **53**

آتور صنعت
ATOORSANAT

آتور صنعت
ATOORSANAT
SEW EURODRIVE

MOUNTING POSITIONS 54

General Information 54

VARIGEAR® VU Configuration - R-Series 56

VARIGEAR® VZ Configuration - R-Series 57

VARIGEAR® VU Configuration - F-Series 60

VARIGEAR® VZ Configuration - F-Series 61

VARIGEAR® VU Configuration - K-Series 62

VARIGEAR® VZ Configuration - K-Series 63

VARIGEAR® VU Configuration - S-Series 64

VARIGEAR® VZ Configuration - S-Series 65

TECHNICAL DATA 67

Lubrication 67

Standard Oil 67

Optional Oil 67

Mineral Grease 68

Synthetic Grease 68

Unit Weight - R-Series 72

Unit Weight - F-Series 74

Unit Weight - K-Series 76

Unit Weight - S-Series 78

COMPATIBILITY - PINION GEAR BORE DIAMETERS 79

VARIGEAR® with Parallel Helical Gear Units 85

VARIGEAR® with the SNUGGLER® Helical Gear Units 111

VARIGEAR® with Helical-Bevel Gear Units 133

VARIGEAR® with Helical-Worm Gear Units 155

R-Series Dimensions 168

F-Series Dimensions 214

Shaft Mounted with Feet 232

Shrink Disc Mounted 233

Shrink Disc Mounted with Feet 234

آتور صنعت
ATOORSANAT

Flange Mounted with Shrink Disc....235
Face Mounted with Shrink Disc....236
Available Output Solid Shafts....237
Available Output Hollowshafts....238
Torque Arm Arrangement....239
Output Shaft Tap Specifications....240
Customer Solid Shaft & Assembly/Disassembly Tool....241

K-Series Dimensions....244
Shaft Mounted with Feet....266
Shrink Disc Mounted....267
Shrink Disc Mounted with Feet....268
Flange Mounted with Shrink Disc....269
Face Mounted with Shrink Disc....270
Available Output Solid Shafts....271
Available Output Hollowshafts....272
Torque Arm Arrangement....273
Output Shaft Tap Specifications....274
Customer Solid Shaft & Assembly/Disassembly Tool....275

S-Series Dimensions....278
Available Output Solid Shafts....296
Available Output Hollowshafts....297
Torque Arm Arrangement....298
Output Shaft Tap Specifications....299
Customer Solid Shaft & Assembly/Disassembly Tool....300

AC ELECTRIC MOTORS....302

Mechanical Properties....302
Enclosures....302
Bearings....302
Insulation Classes....302
Corrosion Protection....302
Motor Options....302

Electrical Properties....303
Supply Voltages and Frequencies....303
Winding Connection....303
Ambient Temperature and Altitude....303

آتور صنعت
ATOORSANAT

آتور صنعت
ATOORSANAT
SEW EURODRIVE

Guidance On Motor Selection **304**
Duty Types 304
Start-Stop Frequency 304
Motor Protection **305**
Overhung Load - OHL **306**
Determination of Overhung Load 306
Permissible Output Shaft Loads 306
Output OHL Conversion 307
TECHNICAL DATA **308**
Synchronous Speed 3600 rpm @60 Hz **308**
Synchronous Speed 1800 rpm @ 60Hz **309**
Synchronous Speed 1200 rpm @ 60Hz **310**
Synchronous Speed 1800/3600 rpm @ 60Hz **311**
Synchronous Speed 900/1800 rpm @ 60Hz **312**
Synchronous Speed 1200/3600 rpm @ 60Hz **313**
Synchronous Speed 900/3600 rpm @ 60Hz **314**
Foot Mounted DT/DV Motors and Brakemotors **316**
Flange Mounted DFT/DFV Motors and Brakemotors **319**
Flange Mounted DFT/DFV Motors and Brakemotors **321**
Flange Mounted DFT/DFV Motors and Brakemotors **323**
AUXILIARY DEVICES **324**
Fan End Extended Shaft **324**
Continuous Running Cooling Fan — VS, V **325**
Protective Canopy — C **325**
Encoders **326**
Output Signal 5V TTL 326
Output Signal sin/cos 326
Output Signal HTL 327
Absolute Encoder 327
Encoder Mounting Dimensions 328
Motor Connection Diagrams **329**

آتور صنعت
ATOORSANAT

Dual-Voltage Motors — Single-Speed 329

Single-Voltage Motors — Two-Speed 329

AC Squirrel-Cage Brakemotors 330

Braking from the two pole speed (i.e. 3600rpm) 330

Brake Control Systems 330

Standard Brake Rectifier Wiring Arrangements 331

Key to brake rectifier wiring diagrams 331

The BG Brake Rectifier — Standard for frame sizes up to 100, not available on frame sizes above 100 331

The BGE Brake Rectifier - Standard for motor frame sizes 112M and larger, optional on frame sizes 71 to 100 332

The BSG Brake Control Unit - Standard for motor frame sizes 112M and larger, optional on frame sizes 71 to 100 332

The BMH Brake Rectifier - Optional for frame sizes 71 to 225 333

The BMS Brake Rectifier - Optional for frame sizes up to 100 not available on frame sizes above 100 333

The BME Brake Rectifier - Optional for frame sizes 71 to 225 334

The BMP Brake Control System - Optional for frame sizes 71 to 225 334

The BMK Brake Control System - Optional for frame sizes 71 to 225 335

The BSR Brake Control System 335

The BUR Brake Actuator 336

Mechanical Features of the Brake Rectifier and Brake Control Systems 337

Brake Rectifiers — Technical Data 338

Permissible Brake Work 339

ADDRESS LIST 341

آتور صنعت
ATOORSANAT

آتور صنعت
ATOORSANAT
SEW EURODRIVE

Notes

آتور صنعت
ATOORSANAT

Nomenclature

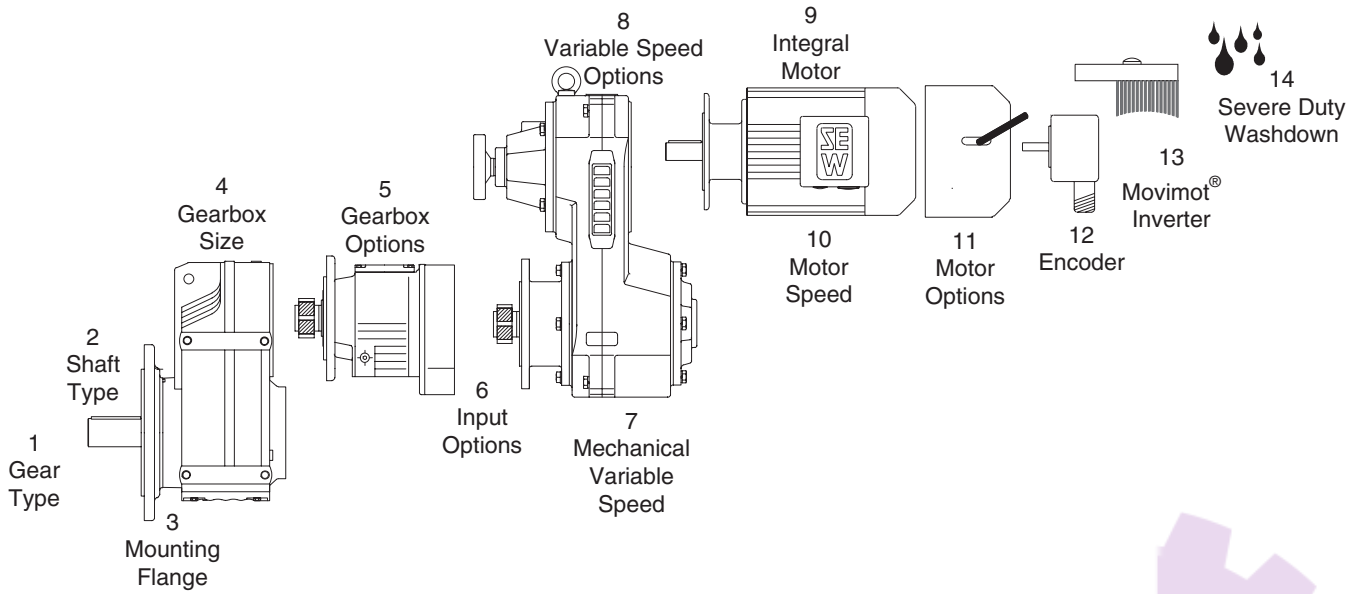

1	2	3	4	5	6	7	8	9	10	11	12	13	14

1 - Type		2 - Shaft		3 - Flange		4 - Size		5 - Gear Options	
R	Helical	**—**	Solid	**F**	B5 Flange	**R**	17 - 167	**R__**	Added Gear Reducer
F	Snuggler	**A**	Hollow	**FF**	B5 Flange Both Sides	**F**	37 - 157	**B**	Rail Holes (F Box)
K	Bevel	**H**	Shrink Disc	**Z**	B14 Flange	**K**	37 - 187	**B**	Feet (KA Box)
S	Worm	**V**	Spline	**M**	Agitator Extension	**S**	37 - 97	**F**	Feet + Flange ® Box)
W	Hypoid	**T**	Hollow with *Torq***LOC**™			**W**	20 - 30	**T**	Torque Arm

6 - Input Options				7 - Mechanical Variable Speed	
A	No Input	**AR**	Torque Limit Coupling	**D_ _**	Varimot® Disc Drive
AD	Input Shaft	**AR__W**	Torque Coupling + Speed Monitor	**VU_ _**	Varigear® Belt Drive U-Flow
AD__P	Input Shaft + Platform	**AR__WS**	Torque Coupling + Slip Monitor	**VZ_ _**	Varigear® Belt Drive Z-Flow
AD__RS	Input Shaft + Backstop	**AL**	Special Input		
AD__ZR	Input Shaft + Shoulder	**AT**	Centrifugal Coupling		
AD__ZS	Input Shaft + Scoop	**AT__RS**	Centrifugal Coupling + Backstop		
AM	NEMA/IEC C-Face	**AT__BM(G)**	Centrifugal Coupling + Brake		
AM_RS	NEMA/IEC C-Fact + Backstop				
AQ	Servo Input				

آتور صنعت ATOORSANAT

آتور صنعت ATOORSANAT SEW EURODRIVE

8 - Variable Speed Options		9 - Integral Motor		60Hz. Synchronous Motor Speed	
H	Handwheel @ 90°	**DT/DV**	Standard AC Induction	**2**	3600 rpm
S	Position Dial	**SDT/SDV**	2-Speed 40/100% Duty	**4**	1800 rpm
HS	90° Handwheel + Position Dial	**DS/DY**	Synchronous Servo	**6**	1200 rpm
BMG	Brake on Pulley Shaft			**8**	900 rpm
B	Nitrated Pulleys			**4/2**	1800/3600 rpm
B	Chrome Disc			**8/4**	900/1800 rpm
N	No Handwheel			**6/2**	1200/3600 rpm
RG	Remote Speed Control			**8/2**	900/3600 rpm
FS	Digital Meter			**12/2**	600/3600 rpm
IG	Pickup w/o Meter				
U	No Vents on Varigear®				
GH	Gear Half of Varimot®				

11 - Motor Options							
BMG __	Motor Brake (71 - 132S)	**HR**	Lever Type Brake Release	**U**	TENV	**VR**	Vent Fan 24V
BM__	Motor Brake (132M +)	**IS**	Plug Connector	**Z**	Cast Iron Fan (High Inertia)	**VY**	Vent Fan Servo
B	Servo Brake	**RS**	Backstop	**VS**	Vent Fan 1 Phase	**TF**	Thermistors (Controller Needed)
HF	Screw Type Brake Release	**C**	Canopy	**V**	Vent Fan 3 Phase	**TH**	Thermostats

12 - Encoder									
1-Type		2-Shaft		3-Size		4-Signal			
E	Incremental Encoder	**S**	Spread Shaft	**1**	All Solid Shafts	**A**	Hardware Less Encoder	**T**	5 VDC In 5 VDC TTL Out
A	Absolute Encoder	**V**	Solid Shaft		Spread Shaft (71 - 100L)	**C**	24 VDC In 24 VDC HTL Out	**Y**	15-24 VDC In SSI Interface Out (SEW Absolute)
N	Proximity Sensor	**H**	Hollow Shaft	**2**	Spread Shaft (112 - 132S)	**R**	24 VDC In 5V DC TTL Out	**6**	24 VDC In 6 Pulses/Rev Out
X	Non-SEW Encoder				All Proximity Sensors	**S**	24 VDC In 1V SS Sin/Cos Out		

13 - Movimot				14 - Severe Duty	
MM03	.5 HP	**MM15**	2.0 HP	**KS**	Severe Duty
MM05	.75 HP	**MM22**	3.0 HP		
MM07	1.0 HP	**MM30**	5.0 HP		
MM11	1.5 HP				

آتور صنعت ATOORSANAT

General Information

1.International SI Units

Type of measure	SI Sign	SI Unit	SI-Units Denomination
Length	l	m	meter
Width	b	m	meter
Height	h	m	meter
Radius	r	m	meter
Rotary Speed	n	rpm	
Diameter	d	m	meter
Distance	s	m	meter
Angle	$\alpha,\beta,\gamma,...$	rad	radian
Area	A,S	m^2	
Volume	V	m^3	
Time	t	s	Second
Cycle Length	T	s	Second
Frequency	f	Hz	Hertz
Velocity	v	m/s	
Acceleration	a	m/s^2	
Gravity	g	m/s^2	$= 9.81\ m/s^2$
Angular Acceleration	α	$\frac{rad}{s^2}$	
Mass	m	kg	kilogram
Density	g	kg/m^3	

Type of measure	SI Sign	SI Unit	SI-Units Denomination
Force	F	N	Newton
Gravity Force	G	N	Newton
Pressure	p	N/m^2	Pascal
Torque	M	Nm	Newton meter
Inertia	J	kgm^2	$m.r^2$
Temperature	T	K	Kelvin
Temperature	t	°C	Celsius
Work, energy	W	J	Joule
Real Power	P	W	Watt
Apparent Power	S	VA	Volt Ampere
Reactive Power	Q	VAR	Volt Ampere
Voltage	U	V	Volt
Elec. Current	I	A	Ampere
Elec. Resistance	R	Ω	Ohm
Elec. Capacity	C	F	Farad
Elec. Inductance	L	H	Henry
Friction Factor	μ	1	
Efficiency	η	1	EFF.
Dynamic Viscosity	η	Ns/m^2	Pascal sec.

2.Conversion Table for Commonly Used English - Metric Units

Distance	Area	Volume
Inches = 39.37 x m	sq. in. = 1550 x m^2	Gallon (UK) = 0.22 x liter
Feet = 3.281 x m	sq. ft. = 10.76 x m^2	Gallon (US) = 0.264 x liter
Yards = 1.094 x m	sq. yd. = 1.196 x m^2	cu. inch = 61.024 x liter
Miles = 0.621 x km	sq. ml. = 0.3861 x km^2	cu. ft. = 35.315 x m^3
Feet = 5280 x miles	m^2 = 106 x km^2	cu. yd. = 1.308 x m^3
Mass & Force	**Pressure, Stress**	**Temperature**
Ounces = 35.3 x kg	lb./sq. in. = 14.69 x atm.	°F = 1.8 x °C + 32
Pounds = 2.205 x kg	ft. water = 33.9 x atm.	°C = 0.555(°F - 32)
Pounds = 0.225 x N	Pascal = 9.81 x 104 x atm.	
Torque	**Inertia**	**Performance**
lb. in. = 8.85 x Nm	WK2 (lbft.^{2}) = 5.93 x GD2	lb. in. = 86.79 x kpm
lb. ft. = 0.738 x Nm	WK2 (lbft.^{2}) = 23.75 x J	lb. ft. = 0.7376 x J
lb. in. = 86.79 x kpm	lb. in.^{2} = 144 x lb. ft.^{2}	lb. ft./min. = 44253 x kW
lb. ft. = 7.233 x kpm	J (mr^2) = 0.25 x GD^2 ($kgfm^2$)	lb. ft./s. = 737.55 x kW
lb. in. = 12 x lb. ft.	hp = 1.34 x kW	

آتور صنعت ATOORSANAT

آتور صنعت ATOORSANAT SEW EURODRIVE

3. Standards and Regulations

SEW-Eurodrive AC motors and brakemotors comply electrically with all the relevant standards including NEMA standard MG1. The efficiency and losses, as shown in the motor data of this catalog, are determined in accordance with IEEE Standard 112, Test Method B per NEMA MG1-12.58-1993. SEW-Eurodrive AC motors and brakemotors meet the thermal standards of all foreign regulations provided the appropriate permissible temperature rise is not exceeded.

Regulation	Ambient Temp. - °C	Permissible temperature rise above the air cooling temperature in °C (measured by change in resistance)	
		B	F
DIN 57530 Part 1/11.72	40	80	105
England BS 2613/70	40	80	105
Canada CSA	40	80	105
USA NEMA	40	80	105
USA ANSI	40	80	105
Italy CEI	40	80	105
Sweden SEN	40	80	—
Norway NEK	40	80	—
Belgium NBN	40	80	105
France NF	40	80	105
Switzerland SEV	40	80	105
IEC 34-1	40	80	105
India IS	40	80	—
Germanischer Lloyd	45	75	95
American Bureau of Shipping	50	75[1]	95
Bureau Veritas	50	70	90
Norske Veritas	45	70	—
Lloyds Register	45	70	90
RINA	50	70	—
PRS Polski Rejester Statkow	50	70	90

[1] Resistance method acceptable only by agreement (Thermometrically 10K less)

آتور صنعت ATOORSANAT

4. Abbreviations

Nomenclature	Abbreviation	Unit
Output Torque	T_a	lb-in.
Output Horsepower	P_a	Hp
Output Shaft Speed	n_a	rpm
Overhung Load	F_{Ra}	lbs
Axial Load	F_A	lbs
Moment of Inertia to be Driven	J	lb-ft^2
Motor Power	P_n	Hp
Lower Limit Speed	n_{a1}	rpm
Upper Limit Speed	n_{a2}	rpm
Output Power at the Lower Limit Speed	P_{a1}	Hp
Output Power at the Upper Limit Speed	P_{a2}	Hp
Service factor for the load classification	f_B	
Service factor based on the ambient temperature	f_T	
Gear Unit Ratio	i	
Output torque at upper limit speed with reference to driving motor.	T_{a2}	lb-in

5. Code Letters for Locked Rotor kVA

NEMA Code Letters per MG1-10.37.2-1993			
Code	**LRkVA/Hp**	**Code**	**LRkVA/Hp**
A	0.0 - 3.14	**L**	9.0 - 9.9
B	3.15 - 3.54	**M**	10.0 - 11.1
C	3.55 - 3.9	**N**	11.2 - 12.4
D	4.0 - 4.4	**P**	12.5 - 13.9
E	4.5 - 4.9	**R**	14.0 - 15.9
F	5.0 - 5.5	**S**	16.0 - 17.9
G	5.6 - 6.2	**T**	18.0 - 19.9
H	6.3 - 7.0	**U**	20.0 - 22.3
J	7.1 - 7.9	**V**	22.4 and up
K	8.0 - 8.9		

$$\text{Locked Rotor Amps} = \frac{\text{Starting LRkVA / Hp x Hp x 1000}}{\text{Rated Volts x 1.732}} \quad \text{for 3 phase motors}$$

6. Service Factoring Using AGMA Criteria

SEW-Eurodrive reducers may be service factored using criteria set forth in the various AGMA Standards. For parallel helical gearmotors (Models R and F) and right angle helical-bevel gearmotors (Model K) AGMA uses service classes I, II, and III, which are based on:

- **Class I** - Steady loads not exceeding normal rating and 8-10 hours running time per day. Service Factor 1.0 minimum.
- **Class II** - Steady loads not exceeding normal rating and 24 hours running time per day.
  Moderate shock loads, not exceeding 1.25 x Rated Load Torque and 8-10 hours running time per day.
  Service Factor 1.4 minimum.
- **Class III** - Moderate shock loads, 1.25 x Rated Load Torque and 24 hours running time per day.
  Heavy shock loads, exceeding 1.25 x Rated Load Torque and 8-10 hours running time per day.
  Service Factor 2.0 minimum.

Reference AGMA Standard 6019-E89 for Service Class listings by application.

AGMA uses service factors for electric motors, turbines, and hydraulic motors as listed by the chart below. In the chart, the reducer loading may be classified as follows:

- **Uniform Load -** Recurrent shock loads do not exceed the nominal specified input or prime mover power.
- **Moderate Shock Load -** Recurrent shock loads do not exceed 1.25 x the nominal specified input or prime mover power.
- **Heavy Shock Load -** Recurrent shock loads do not exceed 1.50 x the nominal specified input or prime mover power.
- **Extreme Shock Load -** Recurrent shock loads do not exceed 1.75 x the nominal specified input or prime mover

NOTE: The magnitude of any recurrent shock load should be estimated or determined through test by the system designer. Recurrent shock loads can be of such a short duration that they may not be reflected in motor current readings. In these cases actual loads are usually determined by strain gauging the driven shaft of the machine.

Duration of Service (Hours per Day)	Uniform Load	Moderate Shock	Heavy Shock	Extreme Shock
Occasional .5 hour	—	—	1.00	1.25
Less than 3 hours	1.00	1.00	1.25	1.50
3 - 10 hours	1.00	1.25	1.50	1.75
Over 10 hours	1.25	1.50	1.75	2.00

When the prime mover is a single or multi-cylinder engine, the service factors must be modified by the following:

Steam and Gas Turbines, Hydraulic or Electric Motors	Single Cylinder Engines	Multi-Cylinder Engines
1.00	1.50	1.25
1.25	1.75	1.50
1.50	2.00	1.75
1.75	2.25	2.00
2.00	2.50	2.25
2.25	2.75	2.50
2.50	3.00	2.75
2.75	3.25	3.00
3.00	3.50	3.25

Starting conditions where peak loads exceed 200% of rated load and applications with frequent starts and stops require special load analysis. Service Factor listings by application may be found in AGMA 6010-F97 for Models R, F and K reducers and AGMA 6034-B92 for Model S reducers and gearmotors.

7. Drive Determination

Listed below is essential information required to precisely select a drive. If the information is not available in the form shown, please contact your SEW-Eurodrive representative for assistance.

- Output Torque (T_a) in lb-in
- Output Horsepower (P_a) in Hp
- Output Shaft Speed (n_a) in rpm
- Overhung Load (F_{Ra}) in lbs
- Axial Load (F_A) in lbs
- Moment of Inertia to be Driven (J) in lb-ft^2
- Special Ambient Temperatures or Altitudes
- Starting Frequency and Duty Cycle
- Mounting Position
- Power Supply Voltage and Frequency
- Brake Torque (when required)

With the above information it is possible to make an optimal mechanical variable speed drive selection. Mechanical variable speed drives have characteristics giving certain advantages depending on the application. The graph below illustrates these characteristics in general.

When the ratio (i_o) of the variable speed unit's output speed with respect to its input speed, is at or near 1, the variable speed unit is running at maximum efficiency (η). At ratios greater than 1 the power (P_a) is relatively constant. Ratios below 1 show a reduction in power and efficiency with an increase in slip (S). Recognizing these characteristics allows the variable speed unit to be matched to a given application.

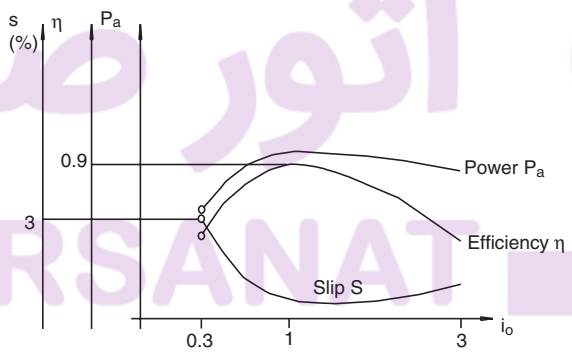

7.1 Selection keeping the torque (T_a) constant

For most drive applications, a constant torque is required. The reducer to which the variable speed unit is connected will be uniformly loaded over the entire variable speed range. Variable speed drives selected for constant torque applications can be sized based on the horsepower requirements at maximum speed as shown in the following equation:

Equation 1:

$$T_{a2} = \frac{P_{a2} \times 63025}{n_{a2}} = Constant$$

P_a = Rated output power in HP
T_a = Output Torque in lb-in
n_a = Output speed in rpm

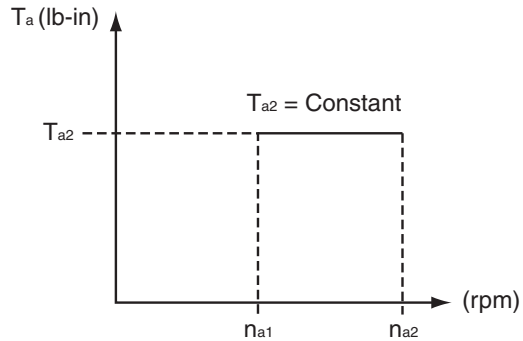

7.2 Selection keeping output horsepower (P_a) constant

When sizing the unit for constant torque, the maximum output power from a variable speed gearmotor is only utilized at the highest output speed. At other output speeds the permissible power capacity is reduced accordingly and can be calculated from the following equation:

Equation 2:

$$P_{a1} = \frac{P_{a2}}{R}$$

R = Variable Speed Unit Ratio
P_a = Rated Output power in HP
n_a = Output speed in rpm

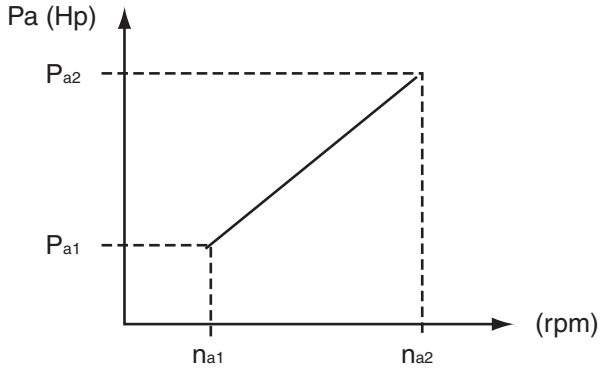

The power (P_{a1}) may be utilized over the entire speed range and can be determined from Equation 3. The variable speed unit is only fully loaded at the lowest speed.

Equation 3:

$$P_{a1} = \frac{T_{a1} \times n_{a1}}{63025} = Constant$$

P_a = Rated Output power in HP
T_a = Output torque
n_a = Output speed in rpm

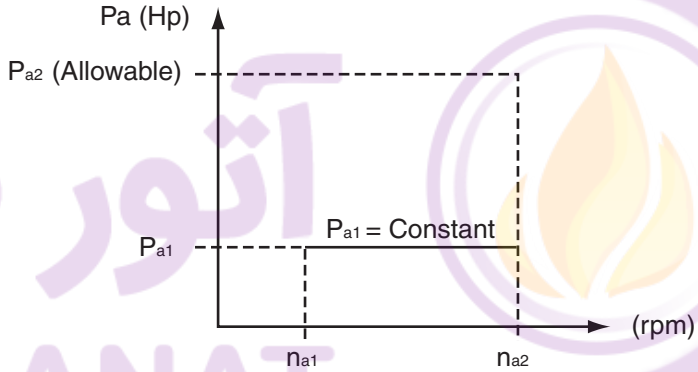

The following diagram illustrates that the VARIGEAR® must be capable of transmitting the torque produced. These maximum torque values can be 200% to 600% higher than a constant torque selection value.

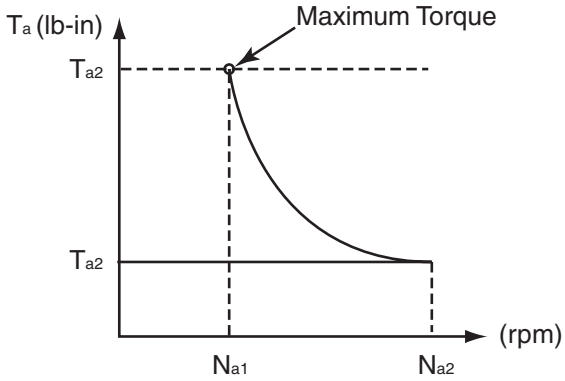

When selecting a VARIGEAR® to meet constant horsepower requirements, refer to the non-geared selection tables and choose output horsepower at lower limit speed P_{a1} to be greater than or equal to the required power. For assistance in selecting constant horsepower drives, please consult our engineering department.

7.3 Selection where both the output power (P_a) and output torque (T_a) are constant

With this type of application, the variable speed unit is utilized at its best. The reducer is selected in such a way that between n_{a1} and n'_a the reducer's rated torque is fully utilized. In the speed range n'_a to n'_{a2} the power remains constant, i.e. the output torque reduces.

$$n'_a = \frac{n_{a1}}{P_{a1}} P_{a2}$$

From Equation 4, the permissible output torque for the speed range n_{a1} to n'_a can be calculated. The permissible loading possibilities are illustrated in the following diagrams:

Equation 4:

$$T_{a1} = \frac{P_{a1} \times 63025}{n_{a1}} = \frac{P_{a2} \times 63025}{n'_a} = Constant$$

P_a = Rated Output power in HP
n_a = Output speed in rpm

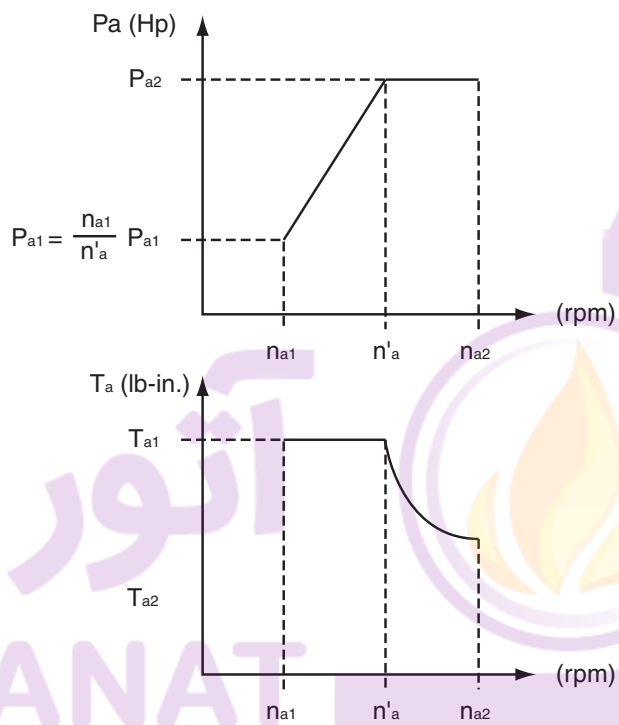

IMPORTANT: The VARIGEAR® variable speed drive is not designed to transmit motor rated power over the entire speed range. Additionally, reducers listed in the selection tables are rated for torque (n_{a2})at the maximum speed and power (P_{a2}). If maximum power is desired at the speed n'_a, the reducer's torque capacity must be verified. To limit the output torque delivered by the variable speed drive and thereby protect the reducer, a torque limiting coupling can be provided between the variable speed drive and the reducer. The use of a motor overload protective device in this type of application would be inappropriate, as they do not afford any protection to the coupled reducer.

آتور صنعت ATOORSANAT

8. Selecting a Drive From this Catalog

Each section contains appropriate information including:

- General Description
- Overhung Loads
- Selection Tables
- Dimension Sheets
- Compatibility Tables
- Mounting Positions
- Weights
- Lubrication Tables

Additionally the selection tables are ordered by speed ratios of the variable speed VARIGEAR®

- 5:1
- 6:1
- 4:1
- 3:1
- 7:1
- 8:1

When selecting a drive for constant torque applications, first find the desired speed ratio and horsepower at maximum speed (P_{a2}). The horsepower shown is Input/Output. Next find the desired speed range in rpm and read across to the model description.

آتور صنعت
ATOORSANAT

9. Tolerances

9.1 Gearmotor Tolerances

The following tables contain shaft and flange tolerance data for all applicable dimensions detailed in this catalog. SEW-Eurodrive finishes output shaft extensions, hollowshaft bores, and flange centering shoulders to ISO tolerances.

Shaft Height D Dimension		
Diameter inch / mm		Tolerance inch / mm
≤	9.84 250	+0 / -0.020 +0 / -0.5
>	9.84 250	+0 / -0.039 +0 / -1.0

Note: On foot-mounted gear units, check to ensure that the motor does not project below the mounting surface.

Hollowshaft Diameter inch		Tolerance
over	to	
0.500	0.875	+.0007 / -0.0
0.875	1.9375	+.0010 / -0.0
1.9375	2.9375	+.0011 / -0.0
2.9375	4.000	+.0013 / -0.0
4.000	4.500	+.0018 / -0.0

Solid Shaft Diameter inch		Tolerance
over	to	
0.500	1.375	+0 / -.0005
1.375	7.5	+0 / -.0010

Diameter mm		Output Shaft U Dimension Tolerance		Hollowshaft Bore U and UG Dimension Tolerance	*Flange Centering Shoulder AK Dimension Tolerance		**Customer Shaft UA and UH Dimension Tolerance
over	to	ISO k6	ISO m6	ISO H7	ISO j6	ISO h6	ISO h6
3	6	+.009 / +.001	—	+0.12 / +0	+.006 / -.002	—	+0 / -.008
6	10	+.010 / +.001	—	+0.15 / +0	+.007 / -.002	—	+0 / -.009
10	18	+.012 / +.001	—	+0.18 / +0	+.008 / -.003	—	+0 / -.011
18	30	+.015 / +.002	—	+.021 / +0	+.009 / -.004	—	+0 / -.013
30	50	+.018 / +.002	—	+.025 / +0	+.011 / -.005	—	+0 / -.016
50	80	—	+.030 / +.011	+.030 / +0	+.012 / -.007	—	+0 / -.019
80	120	—	+.035 / +.013	+.035 / +0	+.013 / -.009	—	+0 / -.022
120	180	—	+.040 / +.015	+.040 / +0	+.014 / -.011	—	+0 / -.025
180	250	—	+.046 / +.017	+.046 / +0	+.016 / -.013	—	+0 / -.029
250	315	—	+.052 / +.020	+.052 / +0	—	+0 / -.032	+0 / -.032
315	400	—	+.057 / +.021	+.057 / +0	—	+0 / -.036	+0 / -.036
400	500	—	+.063 / +.023	+.063 / +0	—	+0 / -.040	+0 / -.040

*** Up to three different flange dimensions are available for each size of helical gear unit, Spiroplan® gear unit, and AC (brake) motor. The possible flanges per size are indicated in the relevant dimension sheets.**

**** For use with shrink disc applications.**

9.2 AC Motor Tolerances

	inch			mm		
	Dimension		Tolerance	Dimension		Tolerance
	over	to		over	to	
D	0	9.84	+0 / -.02	0	250	+0 / -.5
U FU	0.394	0.709	+.0005 / +0	10	18	+.012 / +.001
	0.709	1.181	+.0006 / +.0001	18	30	+.015 / +.002
	1.181	1.969	+.0007 / +.0001	30	50	+.018 / +.002
	1.969	3.150	+.0012 / +.0004	50	80	+.030 / +.011
AK	3.150	4.724	+.0005 / -.0004	80	120	+.013 / -.009
	4.724	7.087	+.0006 / -.0004	120	180	+.014 / -.011
	7.087	9.843	+.0006 / -.0005	180	250	+.016 / -.013
	9.843	12.402	+0 / -.0013	250	315	+0 / -.032
	12.402	15.748	+0 / -.0014	315	400	+0 / -.036

آتور صنعت ATOORSANAT SEW EURODRIVE

VARIGEAR® Non-Geared Units

1. Introduction

The SEW-Eurodrive VARIGEAR® mechanical variable speed units are designed for continuous duty under difficult operating conditions. Only materials of the highest quality are used in the manufacture of the units. These units have the following standard construction features:

- Split beltcase design for ease of maintenance.
- Beltcase of SAE Class 30 gray cast iron except the largest model, VU6, which is of corrosion resistant aluminum alloy.
- Dynamically balanced cast iron sheaves with chill hardened faces.
- Oil resistant, static conducting wide V belt.
- Zinc-bronze laminated wear rings on the sliding sheave halves with a lubricated polyoxymethylene bearing surface.
- Long trouble free operation at constant speed setting without mechanical lock-up due to fretting or grooving of the adjustment mechanism or pulleys respectively.

2. Efficiency

The efficiency of the belt case is primarily determined by the bearing and belt friction. Belt friction varies with the speed range and load and is approximately 85% when running maximum speed at full load.

3. Output Power and Speed

The details on power and speed given in the selection tables refer to non-geared units operating in normal conditions. Output speeds have been rounded and the actual speed may vary slightly due to motor frame size, the loading, or the power supply.

4. Design Variations

In addition to the two assembly configurations, VU and VZ, the VARIGEAR® is also available as a foot or flange mounted non-geared unit. The footed arrangement consists of a cast iron stand to which the standard VARIGEAR® is flange mounted. The flanged units are designed to metric shaft and mounting dimensions.

Additional features available for the VARIGEAR® include:

- Nitrided pulleys for corrosion resistance.
- Severe Duty option for motor protection in outdoor service or humid environments.
- Totally enclosed belt case on sizes 01-41 for dusty environments.
- Brake on the motor or on the driven pulley shaft.
- Speed adjustment through front handwheel, right angle handwheel, or electro mechanical remote control.
- Digital Speed Readout
- Handwheel with speed indicator
- Input shaft in lieu of a motor
- Adapters for C-face motors

5. Dimension Page Notes

VARIGEAR® units from size 11 as well as motors from the frame size 132M are provided with removable lifting eyebolts. Smaller units and motors do not have lifting eyebolts.

Certified dimension sheets for customer orders are available from your SEW-Eurodrive Assembly Center.

آتور صنعت ATOORSANAT

6. Features

SEW-Eurodrive variable speed geared motors equipped with a VARIGEAR® are low maintenance, wide V-belt variable speed drives with flange mounted AC squirrel cage motors. They are used for stepless speed variation. The speed variation is made via an adjustable pulley and a spring loaded pulley. A notched, open flanked wide V-belt serves as the transmission element.

The speed adjustment can be made mechanically with a handwheel or electro mechanically with a remote control servomotor. The adjustment range is 4:1, 6:1, or 8:1 and can be further extended by incorporating a multi-speed motor. Variable speed drives incorporating VARIGEAR® may not be operated with 2-pole motor or at 2-pole speeds.

The transmission of power is through a U-configuration (type VU) or Z configuration (type VZ) and is available with or without additional gearing. Thus, the drives can be easily adapted to different machine designs. On sizes 11-41 it is possible to change from one configuration to the other by interchanging the output flange and the bearing cover of the VARIGEAR® unit. No additional parts are required.

SEW-Eurodrive's modular design system allows the assembly of various types of speed adjusting mechanisms as well as additional equipment and adapters such as brakes and C-face motor mounts respectively. Refer to the VARIGEAR® Modifications section of this catalog.

Variable speed geared motors incorporating VARIGEAR® with reduction gearing are comprised of the following component parts:

1. Adjustable pulleys
2. Wide V-belt
3. Split beltcase housing
4. Drive motor
5. Adjusting and indicating devices
6. Mounting adapter and bearing cover
7. Gear reduction unit

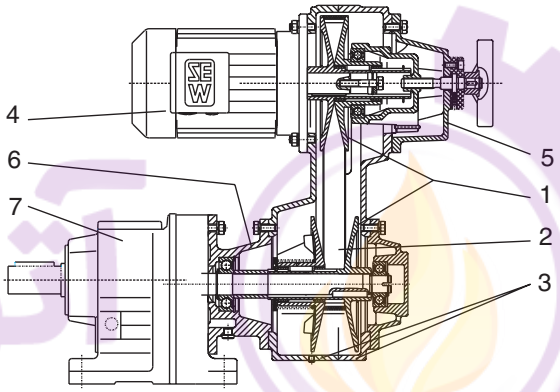

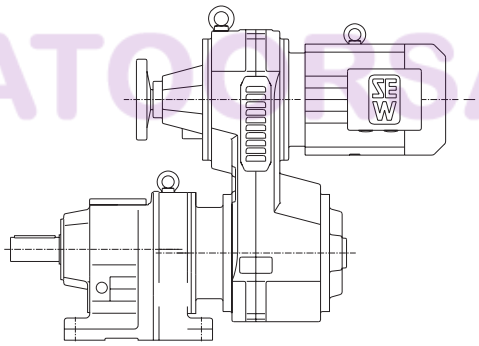

Z Configuration

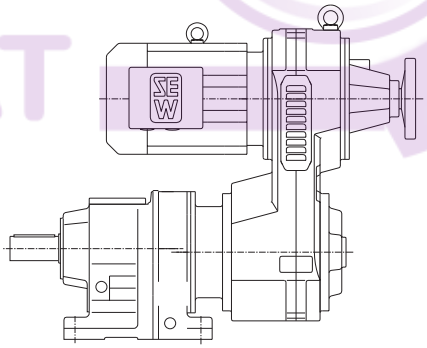

U Configuration

Model	Maximum Motor Output HP	Maximum Speed Range
VU 01 or VZ 01	1.0	6:1
VU 11 or VZ 11	2.0	8:1
VU 21 or VZ 21	4.0	8:1
VU 31 or VZ 31	7.5	8:1
VU 41 or VZ 41	15	6:1
VU 51	30	6:1
VU 6	60	4:1

آتور صنعت ATOORSANAT

7. Selection of VARIGEAR® Service Factors

It is essential for optimum results that the correct service factor be applied when determining the size of a variable speed drive. The factors to be considered are as follows:

f_B - Service factor for the load classification.

f_T - Service factor based on the ambient temperature.

The values for the above service factors can be determined based on the graph and chart on this page.

The unit selected must be rated equal to or greater than the required load torque multiplied by f_B and f_T factors.

7.1. Influence of the Ambient Temperature

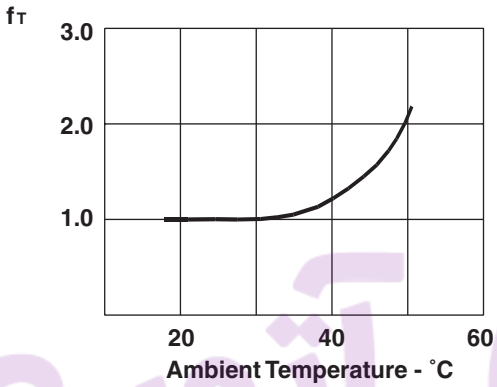

7.2. Influence of the Type of Loading

Load Classification	f_B	Description	Examples
I	1.0	Uniform load, shock free operation.	Small fans, light conveyor drives; centrifugal pumps.
II	1.25	Moderate shock load conditions. Frequent starting.	Cargo lifts, balancing machines, crane drives.
III	1.5	Heavy shock load conditions	Large mixers, crushers, reciprocating machinery.

Note: The f_B and f_T listed above are only for the VARIGEAR® portion of the drive. If a reducer is used with the VARIGEAR®, the service factor must be calculated separately using criteria for the gearing which follows.

آتور صنعت ATOORSANAT

8. Selection of the Gear Unit Service Factors

In order to select the most suitable gear unit, it is necessary to have a thorough knowledge of the characteristics of the driven machine. The gear units are normally designed for a constant torque load and only minimal starts and stops. If these conditions do not exist, it is necessary to determine a service factor (f_B) from the start/stop frequency, Load Class, and the daily operating time as shown in the diagram on the next page.

Additionally, when the gear unit is a helical-worm type (Model S), a service factor determined by ambient temperature (f_{B1}) and the cyclic duration factor (f_{B2}),must be considered. For helical-worm units the service factor will be $f_B \times f_{B1} \times f_{B2}$. Service factors f_B, f_{B1}, and f_{B2} are shown in the diagrams that follow.

9. Load Classification

I = Uniform load. Permissible inertia acceleration factor ≤ 0.2.
II = Moderate shock load. Permissible inertia acceleration factor ≤ 3.0.
III = Heavy shock load. Permissible inertia acceleration factor ≤ 10.

For inertia acceleration factor > 10, please contact your nearest SEW-Eurodrive representative.

Inertia acceleration factor $= \frac{J_L}{J_m}$ where J_L = Reflected Load Inertia and J_m = Motor Inertia

All external load inertias (J) must be reflected back to the input side of the gear unit.

Example: $J_L = J \times \frac{1}{(\text{Gear Ratio})^2}$

Included in the number of starts and stops per hour must be all regenerative brake actions and the speed changes from high to low speed as experienced with multi-speed motors. Example: Load Class I with 200 starts and stops per hour and operating time of 24 hours per day gives f_B = 1.36.

10. AGMA

For Service Factors using AGMA criteria, please refer to page 13. Service Factors f_{B1} and f_{B2} apply to helical-worm gear units only.

Note: Drives listed in the VARIGEAR® with Reducers selection tables are sized for constant torque over the entire speed range based on rated horsepower at maximum speed. However, the units may not produce rated horsepower over the entire speed range. For assistance in determining actual service factors and specific power ratings at speeds other than maximum, we request you submit full details to our engineering department.

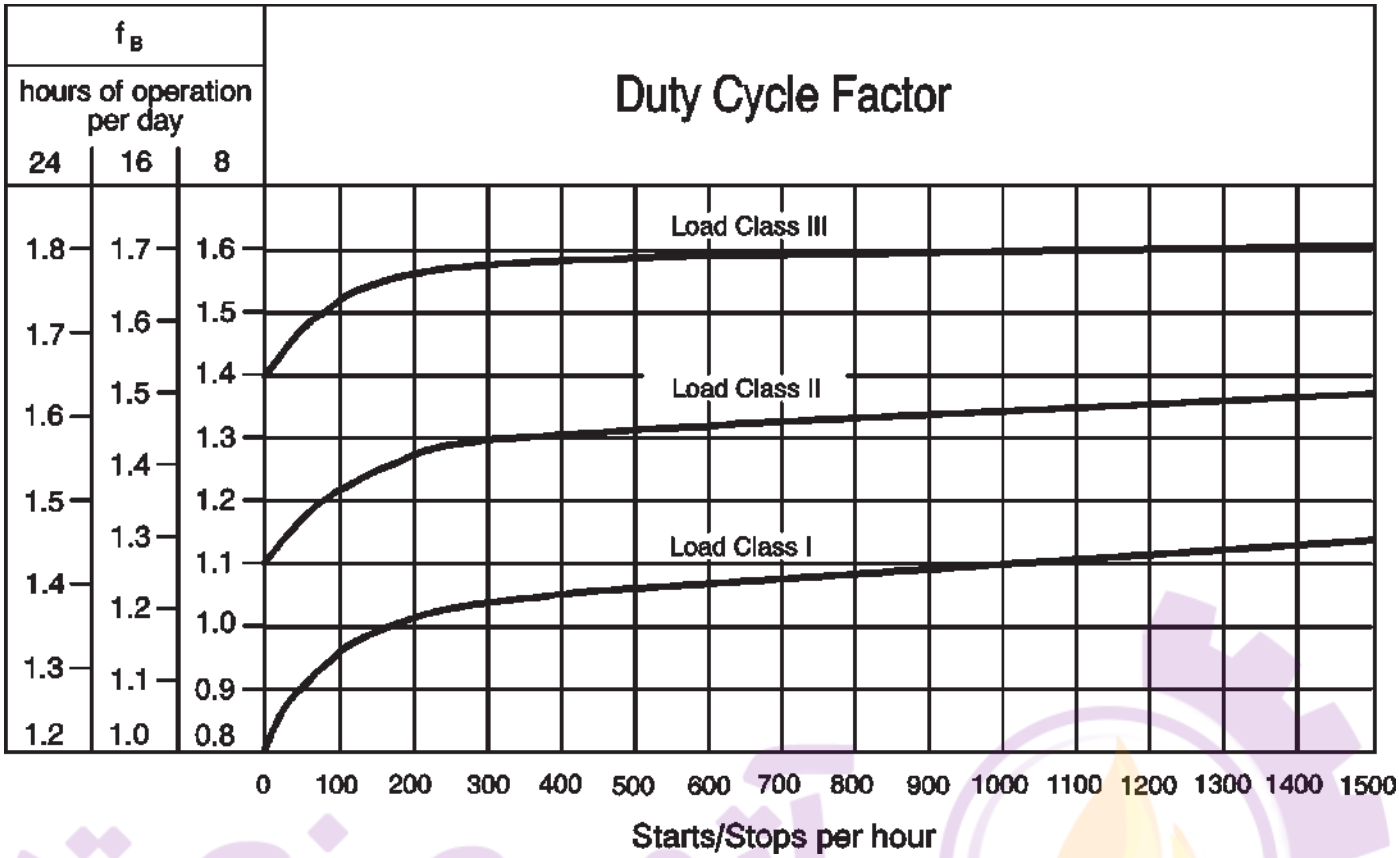

آتور صنعت
ATOORSANAT

Service Factor for Increased Ambient Temperature

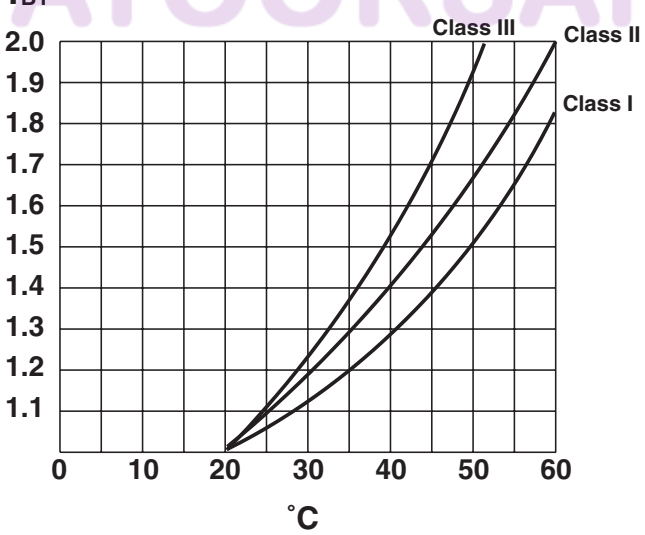

Service Factor for Intermittent Duty

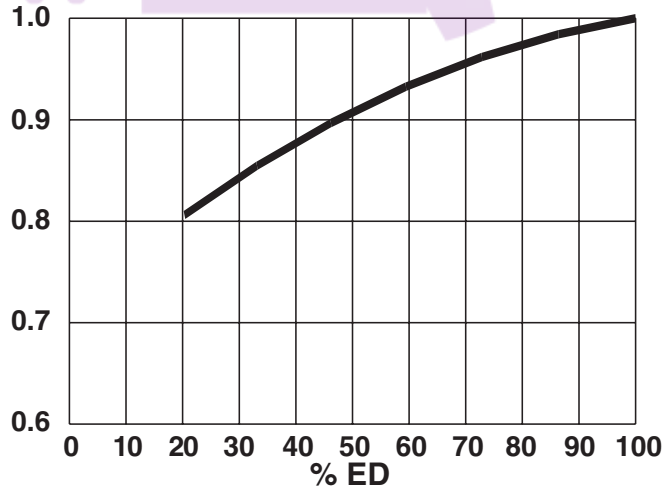

$$\% \text{ ED} = \frac{\text{Running Time During a Cycle}}{\text{Total Cycle Time}} \times 100$$

11.VARIGEAR® Selections

5:1 Ratio					
Input Power P_m Hp	Output Speed Range $n_{a1} – n_{a2}$ rpm	Output Power $P_{a1} – P_{a2}$ Hp	Model		Wt. lbs.
.5	740 – 3859	0.23 – 0.40	VUF/VZF 01	DT71D4	66
	493 – 2497	0.21 – 0.40	VUF/VZF 01	DT80K6	68
.75	740 – 3859	0.34 – 0.60	VUF/VZF 01	DT80K4	68
	493 – 2497	0.21 – 0.60	VUF/VZF 01	DT80N6	73
1	740 – 3859	0.34 – 0.83	VUF/VZF 01	DT80N4	73

6:1 Ratio					
Input Power P_m Hp	Output Speed Range $n_{a1} – n_{a2}$ rpm	Output Power $P_{a1} – P_{a2}$ Hp	Model		Wt. lbs.
.5	433 – 2622	0.36 – 0.40	VUF/VZF 11	DT80K6	104
.75	645 – 3910	0.43 – 0.60	VUF/VZF 11	DT80K4	108
	432 – 2576	0.36 – 0.60	VUF/VZF 11	DT80N6	104
1	645 – 3910	0.32 – 0.83	VUF/VZF 11	DT80N4	108
	430 – 2530	0.38 – 0.83	VUF/VZF 11	DT90S6	117
	410 – 2519	0.56 – 0.83	VUF/VZF 21	DT90S6	179
1.5	647 – 3956	0.56 – 1.21	VUF/VZF 11	DT90S4	117
	432 – 2599	0.38 – 1.21	VUF/VZF 11	DT90L6	121
	616 – 3845	0.86 – 1.21	VUF/VZF 21	DT90S4	179
	410 – 2519	0.56 – 1.21	VUF/VZF 21	DT90L6	181
2	647 – 3956	0.56 – 1.65	VUF/VZF 11	DT90L4	121
	614 – 3801	0.86 – 1.61	VUF/VZF 21	DT90L4	181
	409 – 2475	0.74 – 1.65	VUF/VZF 21	DT100L6	196
3	614 – 3801	1.11 – 2.41	VUF/VZF 21	DT100LS4	187
	410 – 2462	1.21 – 2.41	VUF/VZF 31	DV112M6	287
4	411 – 2495	1.61 – 3.35	VUF/VZF 31	DV132S6	298
5	610 – 3629	1.34 – 4.02	VUF/VZF 31	DT100L4	262
	405 – 2480	2.65 – 4.15	VUF/VZF 41	DV132M6	463
5.4	615 – 3737	1.88 – 4.42	VUF/VZF 31	DV112M4	287
7.5	614 – 3736	1.98 – 6.03	VUF/VZF 31	DV132S4	298
	405 – 2459	2.65 – 6.03	VUF/VZF 41	DV132ML6	485
10	605 – 3689	4.02 – 8.31	VUF/VZF 41	DV132M4	463
	405 – 2459	2.65 – 8.31	VUF/VZF 41	DV160M6	496
12.5	605 – 3689	4.02 – 10.0	VUF/VZF 41	DV132ML4	485
15	605 – 3689	4.02 – 12.0	VUF/VZF 41	DV160M4	496
	411 – 2459	4.82 – 12.0	VUF 51	DV160L6	838
20	617 – 3731	7.24 – 16.4	VUF 51	DV160L4	838
	412 – 2480	4.82 – 16.4	VUF 51	DV180L6	926
25	617 – 3731	7.24 – 20.3	VUF 51	DV180M4	893
30	617 – 3731	7.24 – 24.1	VUF 51	DV180L4	926

آتور صنعت ATOORSANAT SEW EURODRIVE

3:1 Ratio					
Input Power P_m Hp	Output Speed Range $n_{a1} – n_{a2}$ rpm	Output Power $P_{a1} – P_{a2}$ Hp	Model		Wt. lbs.
50	825 – 2499	20 – 40	VUF 6	DV225S4	1411
60	825 – 2499	20 – 50	VUF 6	DV225M4	1455

7:1 Ratio					
.5	433 – 3135	0.36 – 0.40	VUF/VZF 11	DT80K6	104
.75	432 – 3080	0.36 – 0.60	VUF/VZF 11	DT80N6	108
1	430 – 3025	0.38 – 0.83	VUF/VZF 11	DT90S6	117
1.5	432 – 3107	0.38 – 1.21	VUF/VZF 11	DT90L6	121

4:1 Ratio					
25	439 – 2012	10.0 – 21.4	VUF 6	DV200LS6	1191
30	439 – 2012	10.0 – 25.5	VUF 6	DV200L6	1213
40	658 – 3027	13.4 – 33.5	VUF 6	DV200L4	1213

8:1 Ratio					
1	410 – 3260	0.56 – 0.83	VUF/VZF 21	DT90S6	179
1.5	410 – 3260	0.56 – 1.21	VUF/VZF 21	DT90L6	181
2	409 – 3203	0.74 – 1.65	VUF/VZF 21	DT100L6	196
3	410 – 3260	1.21 – 2.41	VUF/VZF 31	DV112M6	287
4	411 – 3303	1.61 – 3.35	VUF/VZF 31	DV132S6	298

12.Totally Enclosed Non-Ventilated

5:1 Ratio						
Input Power P_m Hp	Output Speed Range $n_{a1} – n_{a2}$ rpm	Output Power $P_{a1} – P_{a2}$ Hp	Model			Wt. lbs.
.75	494 – 2542	0.21 – 0.60	VUF/VZF	01U	DT80N6	73
6:1 Ratio						
.75	432 – 2576	0.36 – 0.60	VUF/VZF	11U	DT80N6	104
1	433 – 2622	0.38 – 0.83	VUF/VZF	11U	DT90S6	117
	410 – 2519	0.56 – 0.83	VUF/VZF	21U	DT90S6	179
1.5	433 – 2622	0.38 – 1.21	VUF/VZF	11U	DT90L6	121
	410 – 2519	0.56 – 1.21	VUF/VZF	21U	DT90L6	181
2	410 – 2519	0.74 – 1.65	VUF/VZF	21U	DT100L6	196
3	411 – 2495	1.21 – 2.41	VUF/VZF	31U	DV112M6	287
4	411 – 2495	1.61 – 3.35	VUF/VZF	31U	DV132S6	298
5	405 – 2480	2.65 – 4.15	VUF/VZF	41U	DV132M6	463
7.5	405 – 2459	2.65 – 6.03	VUF/VZF	41U	DV132ML6	485

آتور صنعت ATOORSANAT

13. Dimensions - Foot Mounted

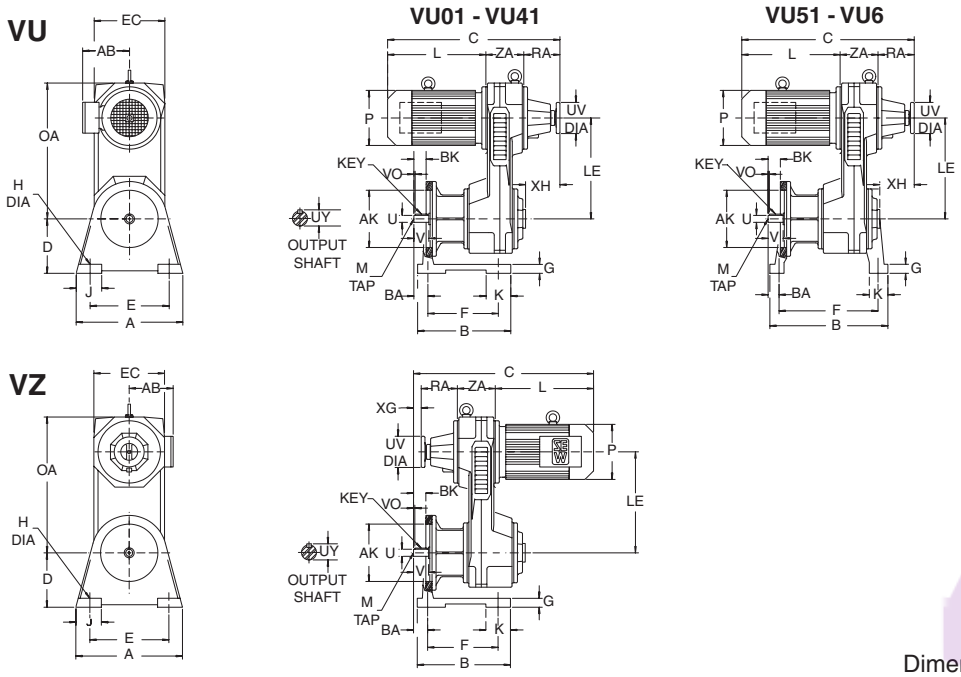

Dimensions are *inch* / *mm*

VARIGEAR®									
Model	**AK**	**EC**	**LE**	**OA**	**RA**	**UV**	**XG**	**XH**	**ZA**
VU/VZ01	4.33 110	6.93 176	7.17 182	10.59 269	3.86 98	3.15 80	-0.41 -10.5	2.83 72	3.15 80
VU/VZ11	5.12 130	7.20 183	9.13 232	12.68 322	4.61 117	3.94 100	-0.63 -16	3.76 95.5	3.86 98
VU/VZ21	7.09 180	8.94 227	9.65 245	13.98 355	5.12 130	3.94 100	-0.59 -15	4.31 109.5	4.72 120
VU/VZ31	9.06 230	11.14 283	12.01 305	17.52 445	5.91 150	4.92 125	-1.46 -37	5.43 138	5.98 152
VU/VZ41	9.06 230	13.70 348	14.96 380	21.77 553	7.44 189	7.87 200	-1.89 -48	6.81 173	7.09 180
VU51	10.47 266	15.67 398	18.11 460	25.91 658	8.66 220	7.87 200	— —	8.03 204	7.87 200
VU6	13.78 350	18.94 481	22.60 574	31.69 805	6.10 155	15.16 385	— —	1.69 43	8.43 214

OUTPUT SHAFT						
Model	**U***	**UY**	**V**	**VO**	**Key**	**M**
VU/VZ01	0.748 19	0.85 21.5	1.57 40	0.16 4	.24 x .24 x 1.26 6 x 6 x 32	DM6 x .63 DM6 x 16
VU/VZ11	0.945 24	1.06 27	1.97 50	0.20 5	.31 x .28 x 1.57 8 x 7 x 40	DM8 x .75 DM8 x 19
VU/VZ21	1.102 28	1.22 31	2.36 60	0.20 5	.31 x .28 x 1.97 8 x 7 x 50	DM10 x .87 DM10 x 22
VU/VZ31	1.102 28	1.22 31	2.36 60	0.20 5	.31 x .28 x 1.97 8 x 7 x 50	DM10 x .87 DM10 x 22
VU/VZ41	1.496 38	1.61 41	3.15 80	0.20 5	.39 x .31 x 2.76 10 x 8 x 70	DM12 x 1.10 DM12 x 28
VU51	1.654 42	1.77 45	4.33 110	0.39 10	.47 x .31 x 2.76 12 x 8 x 70	DM16 x 1.42 DM16 x 36
VU6	1.890 48	2.03 51.5	4.33 110	0.39 10	.55 x .35 x 3.15 14 x 9 x 80	DM16 x 1.42 DM16 x 36

***Note: See page 18 for tolerances.**

Dimensions subject to change without notice.

آتور صنعت ATOORSANAT SEW EURODRIVE

MOUNTING FEET											
Model	**A**	**B**	**BA**	**BK**	**D***	**E**	**F**	**G**	**H**	**J**	**K**
VU/VZ01	7.48 190	8.66 220	0.89 22.5	1.56 39.5	4.41 112	5.51 140	7.28 185	0.79 20	0.55 14	2.17 55	2.17 55
VU/VZ11	9.06 230	9.25 235	1.14 29	1.85 47	5.20 132	6.69 170	7.87 200	0.98 25	0.55 14	2.36 60	2.36 60
VU/VZ21	11.97 304	11.97 304	1.30 33	2.09 53	6.30 160	9.06 230	10.00 254	1.18 30	0.55 14	2.76 70	2.36 60
VU/VZ31	14.17 360	16.14 410	0.91 23	2.09 53	8.86 225	10.63 270	13.78 350	1.97 50	0.71 18	3.54 90	3.15 80
VU/VZ41	14.17 360	16.14 410	1.65 42	2.83 72	8.86 225	10.63 270	13.78 350	1.97 50	0.71 18	3.54 90	3.15 80
VU51	15.75 400	25.28 642	1.46 37	4.21 107	10.43 265	11.42 290	22.52 572	2.56 65	1.02 26	4.33 110	4.92 125
VU6	18.90 480	33.31 846	2.17 55	3.82 97	13.98 355	13.39 340	29.33 745	2.76 70	1.30 33	4.92 125	4.92 125

***Note: See page 18 for tolerances.**

	MOTOR									
	VU/VZ01		VU/VZ11	VU/VZ21	VU/VZ31			VU/VZ41		
	DT71	DT80	DT80 DT90	DT90 DT100	DT100	DV112M	DV132S	DV132M	DV132ML	DV160M
AB	5.43 138	5.43 138	6.73 171	6.89 175	6.89 175	7.40 188	7.40 188	9.13 232	9.13 232	9.13 232
L	7.95 202	9.92 252	10.75 273	12.24 311	12.24 311	13.74 349	15.51 394	15.83 402	18.19 462	18.19 462
P	5.71 145	5.71 145	7.76 197	7.76 197	7.76 197	8.70 221	8.70 221	10.83 275	10.83 275	10.83 275
VU-C	14.96 380	16.93 430	19.21 488	22.09 561	24.13 613	25.63 651	27.40 696	30.35 771	32.72 831	32.72 831
VZ-C	14.57 370	16.54 420	18.58 472	21.50 546	22.68 576	24.17 614	25.94 659	28.46 723	30.83 783	30.83 783

	MOTOR				
	VU51		VU6		
	DV160L	DV180	DV180	DV200	DV225
AB	10.04 255	10.55 268	10.55 268	11.81 300	11.97 304
L	19.80 503	22.64 575	22.64 575	24.53 623	28.54 725
P	13.03 331	13.03 331	13.03 331	15.51 394	15.51 394
VU-C	36.34 923	39.17 995	37.17 944	39.06 992	43.07 1094

Dimension AB is to motor conduit box
Eye bolts are removable
Size VU6 is supplied with windless-type control

14. Dimensions - Flange Mounted

VUF

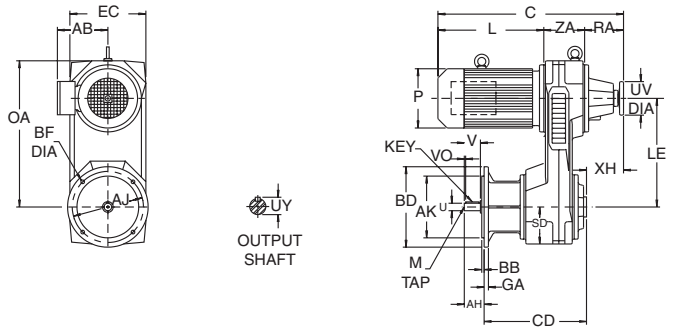

VZF

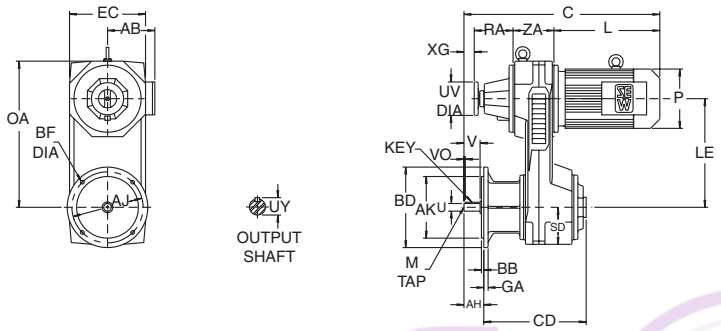

Dimensions are *inch* / *mm*

VARIGEAR®									
Model	**EC**	**LE**	**OA**	**RA**	**SD**	**UV**	**XG**	**XH**	**ZA**
VUF/VZF01	6.93 176	7.17 182	10.59 269	3.86 98	2.83 72	3.15 80	-0.41 -10.5	2.83 72	3.15 80
VUF/VZF11	7.20 183	9.13 232	12.68 322	4.61 117	3.46 88	3.94 100	-0.63 -16	3.76 95.5	3.86 98
VUF/VZF21	8.94 227	9.65 245	13.98 355	5.12 130	4.33 110	3.94 100	-0.59 -15	4.31 109.5	4.72 120
VUF/VZF31	11.14 283	12.01 305	17.52 445	5.91 150	5.43 138	4.92 125	-1.46 -37	5.43 138	5.98 152
VUF/VZF41	13.70 348	14.96 380	21.77 553	7.44 189	6.69 170	7.87 200	-1.89 -48	6.81 173	7.09 180
VUF51	15.67 398	18.11 460	25.91 658	8.66 220	7.68 195	7.87 200	— —	8.03 204	7.87 200
VUF6	18.94 481	22.60 574	31.69 805	6.10 155	9.65 245	15.16 385	— —	1.69 43	8.43 214

Inch *Optional Metric*	OUTPUT SHAFT					
Model	**U***	**UY**	**V**	**VO**	**Key**	**M**
VUF/VZF01	0.748 19	0.85 21.5	1.57 40	0.16 4	.24 x .24 x 1.26 6 x 6 x 32	DM6 x .63 DM6 x 16
VUF/VZF11	0.945 24	1.06 27	1.97 50	0.20 5	.31 x .28 x 1.57 8 x 7 x 40	DM8 x .75 DM8 x 19
VUF/VZF21	1.102 28	1.22 31	2.36 60	0.20 5	.31 x .28 x 1.97 8 x 7 x 50	DM10 x .87 DM10 x 22
VUF/VZF31	1.102 28	1.22 31	2.36 60	0.20 5	.31 x .28 x 1.97 8 x 7 x 50	DM10 x .87 DM10 x 22
VUF/VZF41	1.496 38	1.61 41	3.15 80	0.20 5	.39 x .31 x 2.76 10 x 8 x 70	DM12 x 1.10 DM12 x 28
VUF51	1.654 42	1.77 45	4.33 110	0.39 10	.47 x .31 x 2.76 12 x 8 x 70	DM16 x 1.42 DM16 x 36
VUF6	1.890 48	2.03 51.5	4.33 110	0.39 10	.55 x .35 x 3.15 14 x 9 x 80	DM16 x 1.42 DM16 x 36

***Note: See page 18 for tolerances.**

Dimensions subject to change without notice.

آتور صنعت ATOORSANAT SEW EURODRIVE

	Inch *Optional Metric*		FLANGE				Specify BD dimension when ordering	
Model	**AH**	**AJ**	**AK***	**BB**	**BD**	**BF**	**CD**	**GA**
VUF/VZF01	2.11 53.5	5.12 130	4.33 110	0.14 3.5	6.30 160	0.35 9	8.11 206	0.39 10
VUF/VZF11	2.44 62	6.50 165	5.12 130	0.14 3.5	7.87 200	0.43 11	8.90 226	0.47 12
VUF/VZF21	2.76 70	8.46 215	7.09 180	0.16 4	9.84 250	0.53 13.5	10.51 267	0.59 15
VUF/VZF31	2.87 73	10.43 265	9.06 230	0.16 4	11.81 300	0.53 13.5	12.28 312	0.63 16
VUF/VZF41	3.86 98	11.81 300	9.84 250	0.20 5	13.78 350	0.71 18	15.00 381	0.71 18
VUF51	5.28 134	13.78 350	11.81 300	0.20 5	15.75 400	0.71 18	16.97 431	0.79 20
VUF6	5.51 140	15.75 400	13.78 350	0.20 5	17.72 450	0.71 18	25.47 647	0.87 22

***Note: See page 18 for tolerances.**

			ALTERNATE FLANGE				Specify BD dimension when ordering	
Model	**AH**	**AJ**	**AK***	**BB**	**BD**	**BF**	**CD**	**GA**
VUF/VZF11	2.20 56	5.12 130	4.33 110	0.14 3.5	6.30 160	0.35 9	9.13 232	0.39 10
VUF/VZF21	2.60 66	6.50 165	5.12 130	0.14 3.5	7.87 200	0.43 11	10.67 271	0.47 12
VUF/VZF31	2.68 68	8.46 215	7.09 180	0.16 4	9.84 250	0.53 13.5	12.48 317	0.59 15
VUF/VZF41	3.62 92	10.43 265	9.06 230	0.16 4	11.81 300	0.53 13.5	15.24 387	0.63 16
VUF51	5.00 127	11.81 300	9.84 250	0.20 5	13.78 350	0.71 18	17.24 438	0.71 18
VUF6	5.20 132	13.78 350	11.81 300	0.20 5	15.75 400	0.71 18	25.79 655	0.79 20

***Note: See page 18 for tolerances.**

	MOTOR									
	VUF/VZF01		**VUF/VZF11**	**VUF/VZF21**	**VUF/VZF31**			**VUF/VZF41**		
	DT71	**DT80**	**DT90**	**DT100**	**DT100**	**DV112M**	**DV132S**	**DV132M**	**DV132ML**	**DV160M**
AB	5.43 138	5.43 138	6.73 171	6.89 175	6.89 175	7.40 188	7.40 188	9.13 232	9.13 232	9.13 232
L	7.95 202	9.92 252	10.75 273	12.24 311	12.24 311	13.74 349	15.51 394	15.83 402	18.19 462	18.19 462
P	5.71 145	5.71 145	7.76 197	7.76 197	7.76 197	8.70 221	8.70 221	10.83 275	10.83 275	10.83 275
VU-C	14.96 380	16.93 430	19.21 488	22.09 561	24.13 613	25.63 651	27.40 696	30.35 771	32.72 831	32.72 831
VZ-C	14.57 370	16.54 420	18.58 472	21.50 546	22.68 576	24.17 614	25.94 659	28.46 723	30.83 783	30.83 783

	MOTOR				
	VUF51		**VUF6**		
	DV160L	**DV180**	**DV180**	**DV200**	**DV225**
AB	10.04 255	10.55 268	10.55 268	11.81 300	11.97 304
L	19.80 503	22.64 575	22.64 575	24.53 623	28.54 725
P	13.03 331	13.03 331	13.03 331	15.51 394	15.51 394
VU-C	36.34 923	39.17 995	37.17 944	39.06 992	43.07 1094

Dimension AB is to motor conduit box
Eye bolts are removable
Size VU6 is supplied with windless-type control

15. VARIGEAR® Options

15.1. Remote Digital Speed Indicator - DA

The digital speed indicator consists of a magnetic pick-up mounted to the VARIGEAR® bearing cover and a 4 digit LED display tachometer unit which is field programmable for user desired units of speed, i.e. rpm, feet/minute, etc. It may be ordered for either 120VAC or 220VAC power supply. The faceplate meets NEMA 4 requirements when used with a mounting gasket. The wiring leads to the magnetic pick-up should not exceed 200 feet in length or a lead resistance of 2 ohm.

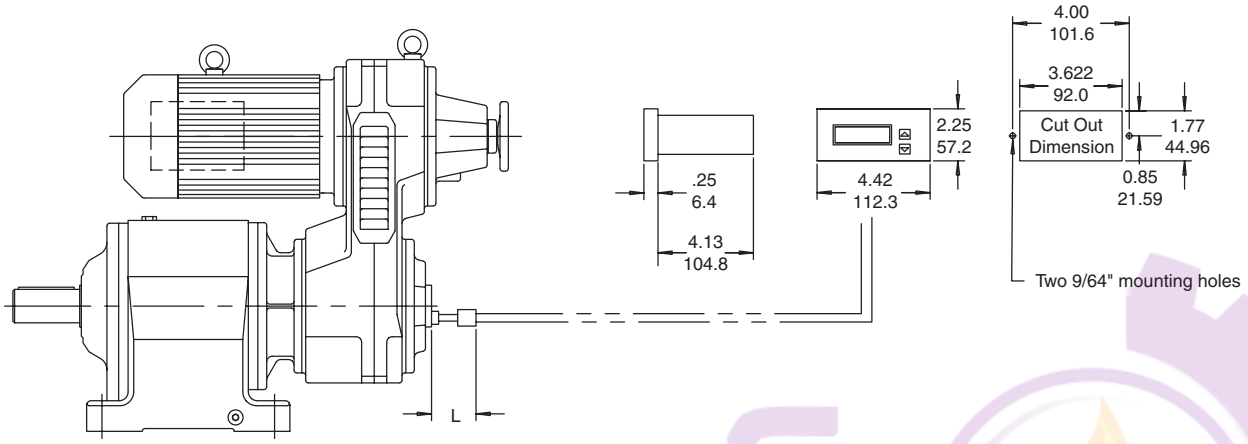

The VARIGEAR® may be supplied with the magnetic pick-up less meter, Option IG. The unit generates 2 pulses per revolution on VARIGEAR® sizes 01-51 and 6 pulses per revolution on VARIGEAR® size 6.

Please reference the following table for the **L** dimension.

VARIGEAR® Size	L (inch / mm)
VU/VZ 01	2.1
	53
VU/VZ 11	2.1
	53
VU/VZ 21	2.1
	53
VU/VZ 31	2.1
	53
VU/VZ 41	2.1
	53
VU 51	2.1
	53
VU 6	1.9
	48

Dimensions subject to change without notice.

15.2. Electro Mechanical Remote Speed Control - EF

The Electric Remote Control (ERC) unit replaces the handwheel on a Right Angle Control when remote speed adjustment is desired. It is intended for applications requiring only occasional speed adjustment and is not to be used for automatic control. The ERC motor is rated for 15%ED (cyclic duration factor) and a maximum starting frequency of 20 per hour. Unless specified otherwise, the ERC will be mounted at 270° as pictured below. Pushbuttons, controls, etc. are to be furnished by the customer. The dimensions below are for the three phase ERC, please contact your SEW-Eurodrive Assembly Center for single phase ERC dimensions.

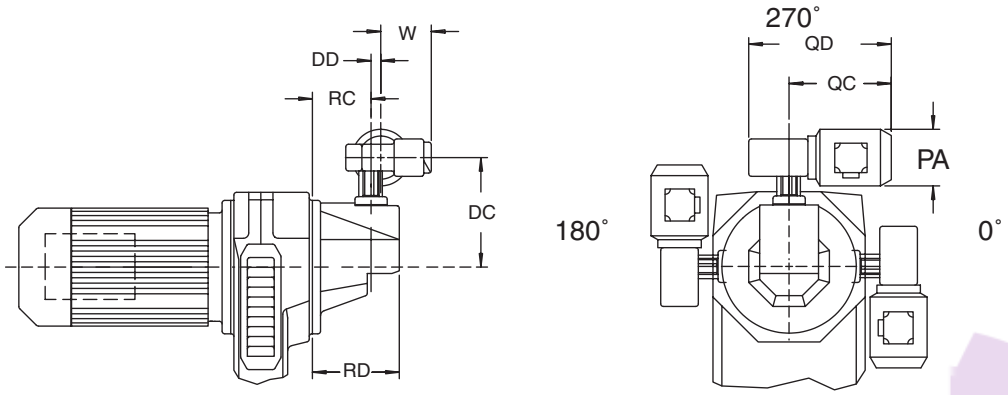

Model	DC	DD	PA	QC	QD	RC	RD	W	Adj. Time in seconds* 1:6	1:8
VU/VZ01EF	6.26 59	1.30 33	4.17 106	7.09 180	10.12 257	2.36 60	4.43 112.5	3.70 94	17	—
VU/VZ11EF	6.26 159	1.30 33	4.17 106	7.09 180	10.12 257	2.36 60	4.43 112.5	3.70 94	22	24
VU/VZ21EF	7.03 178.5	1.30 33	4.17 106	7.09 180	10.12 257	2.95 75	5.02 127.5	3.70 94	26	31
VU/VZ31EF	8.07 205	1.30 33	4.17 106	7.09 180	10.12 257	3.70 94	5.77 146.5	3.70 94	36	39
VU/VZ41EF	9.29 236	1.30 33	4.17 106	7.87 200	10.91 277	4.80 122	7.48 190	3.70 94	—	34
VU51EF	9.84 250	1.30 33	4.17 106	7.87 200	10.91 277	5.28 134	7.87 200	3.70 94	—	41
VU6EF	10.24 260	1.30 33	4.17 106	7.87 200	10.91 277	6.14 156	9.06 230	3.70 94	46	—

* Adjustment period shown is time to cover minimum to maximum speed using the 3 phase ERC motor operating at 60Hz. The single phase ERC motor speed adjustment period is 0.60 times the value shown.

SPECIFICATIONS		
	EF 3 Phase VU/VZ 01-41, VU51, VU6	EF Single Phase VU/VZ 01-41, VU51, VU6
Frame Size	DM90-60K + E13	WKM100-80 + E13
Power Rating	75W	120W
Supply Voltage	220-318V/380-550V	115V
Frequency	50/60Hz	60Hz
Current	.43 - .76A/.25 - .44A	2.1A
Speed	25/30 rpm	50 rpm
Enclosure	IP55/TENV	IP55/TENV

Dimensions subject to change without notice.

15.3. Right Angle Control with Handwheel - H

The right angle control head allows handwheel placement at 90° to the standard front control location. It may be placed in any of three positions according to the requirements of the application; 270° is standard. It is equipped with field adjustable minimum and maximum speed stops. Clockwise rotation of the handwheel increases output speed.

Model	UV	OC	RC	RD	Revolutions*			Torque**
					1:4	1:6	1:8	
VU/VZ01H	3.94 100	4.69 119	2.36 60	4.43 112.5	—	7	—	15.9 1.8
VU/VZ11H	3.94 100	4.69 119	2.36 60	4.43 112.5	—	10	11	23.9 2.7
VU/VZ21H	3.94 100	5.45 138.5	2.95 75	5.02 127.5	—	11	13	35.4 4.0
VU/VZ31H	3.94 100	6.50 165	3.70 94	5.77 146.5	—	14	15	57.5 6.5
VU/VZ41H	6.30 160	7.95 202	4.80 122	7.48 190	—	14	—	79.7 9.0
VU51H	6.30 160	8.50 216	5.28 134	7.87 200	—	17	—	106 12.0
VU6H	6.30 160	8.86 225	6.14 156	9.06 230	18	—	—	150 17.0

* Handwheel revolutions to cover minimum to maximum speed.
** Torque needed for speed adjustment lb-in/Nm.

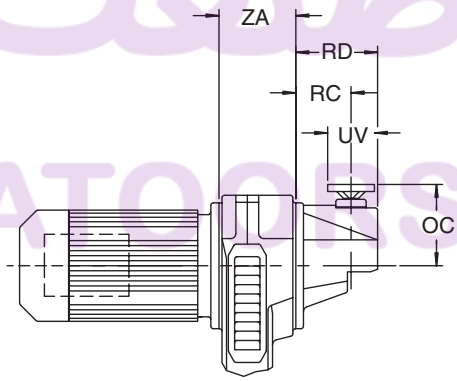

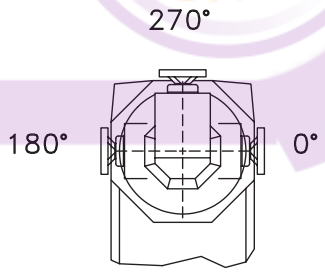

آتور صنعت ATOORSANAT

Dimensions subject to change without notice.

آتور صنعت ATOORSANAT SEW EURODRIVE

15.4. Right Angle Control with Bare Shaft Extension - N

The bare shaft extension allows the customer to adapt any appropriate mechanism for speed adjustment, e.g. flexible cable, cranks, oversize handwheels, etc. It allows shaft extension placement at 90° to the standard front control location. It may be placed in any of three positions according to the requirements of the application; 270° is standard. The control head is equipped with field adjustable minimum and maximum speed stops. Clockwise rotation of the shaft increases output speed.

Model	AG	RC	RD	UC*	UT	VC	WD	YZ	Torque **
VU/VZ01N	.04 1.1	2.36 60	4.43 112.5	.47 12	.53 13.5	.81 20.5	4.06 103	.16 4	15.9 1.8
VU/VZ11N	.04 1.1	2.36 60	4.43 112.5	.47 12	.53 13.5	.81 20.5	4.06 103	.16 4	23.9 2.7
VU/VZ21N	.04 1.1	2.95 75	5.02 127.5	.47 12	.53 13.5	.81 20.5	4.82 122.5	.16 4	35.4 4.0
VU/VZ31N	.04 1.1	3.70 94	5.77 146.5	.47 12	.53 13.5	.81 20.5	5.87 149	.16 4	57.5 6.5
VU/VZ41N	.05 1.3	4.80 122	7.48 190	.71 18	.71 18	.81 20.5	7.28 185	.24 6	79.7 9.0
VU51N	.05 1.3	5.28 134	7.87 200	.71 18	.71 18	.81 20.5	7.83 199	.24 6	106 12.0
VU6N	.05 1.3	6.14 156	9.06 230	.71 18	.71 18	.81 20.5	8.27 210	.24 6	150 17.0

* Tolerance is +0 / -.0004 inch, +0 / -.011 mm.
** Torque needed for speed adjustment lb-in/Nm.

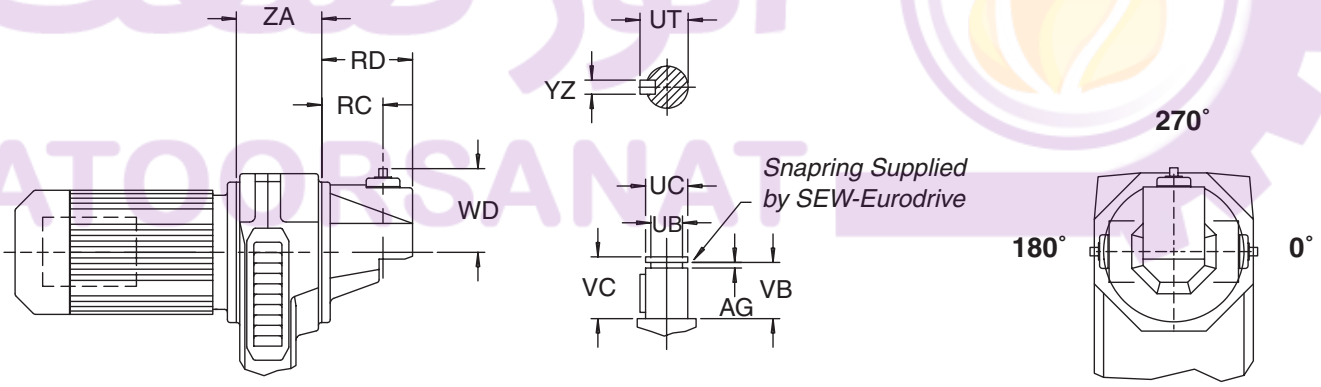

15.5. Right Angle Control with Mechanical Speed Indicator Mounted In Handwheel - HS

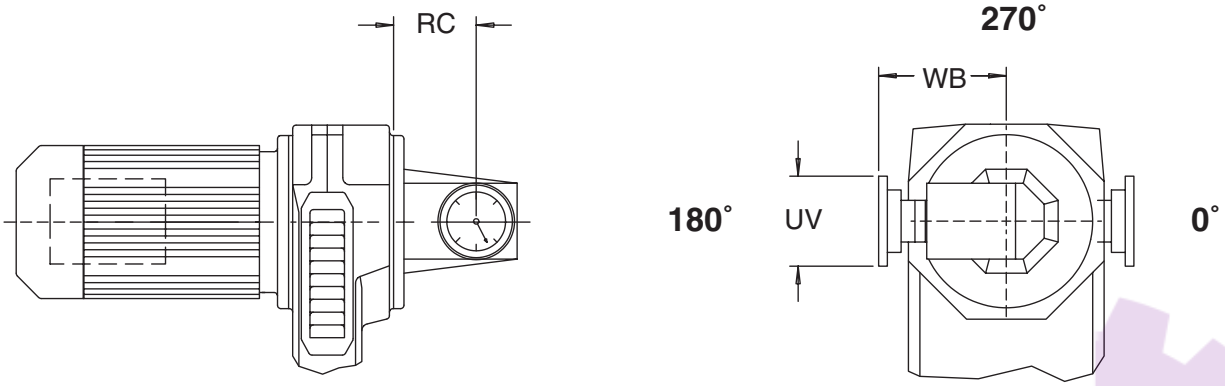

The speed indicator in the handwheel is a convenient reference for noting the speed setting at which the unit is operating. The indicator does not register actual shaft speeds. The indicator will only operate when the handwheel spindle is in the horizontal plane. Clockwise rotation of the handwheel increases the output speed.

Model	UV	RC	WB	Revolutions *			Torque **
				1:4	1:6	1:8	
VU/VZ01H	3.94 100	2.36 60	5.67 144	—	7	—	15.9 1.8
VU/VZ11H	3.94 100	2.36 60	5.67 144	—	10	11	23.9 2.7
VU/VZ21H	3.94 100	2.95 75	6.44 163.5	—	11	13	35.4 4.0
VU/VZ31H	3.94 100	3.70 94	7.48 190	—	14	15	57.5 6.5
VU/VZ41H	6.30 160	4.80 122	9.25 235	—	14	—	79.7 9.0
VU51H	6.30 160	5.28 134	9.80 249	—	17	—	106 12.0
VU6H	6.30 160	6.14 156	9.96 253	18	—	—	150 17.0

Note: For right angle control please specify handwheel position when ordering, i.e. 0, 180, or 270 degree. 0 degree is standard; 180 degree is shown.

Dimensions subject to change without notice.

آتور صنعت ATOORSANAT SEW EURODRIVE

15.6. Standard Handwheel with Mechanical Speed Indicator - S

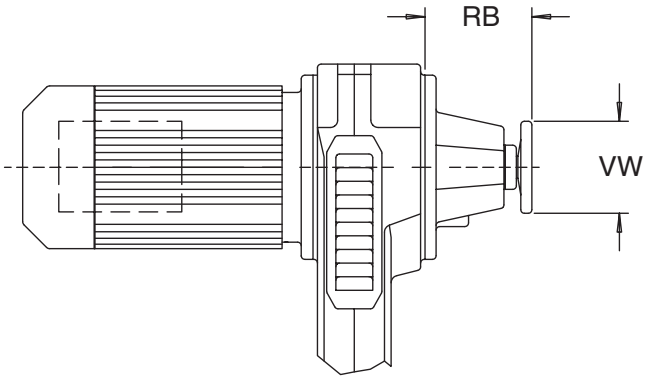

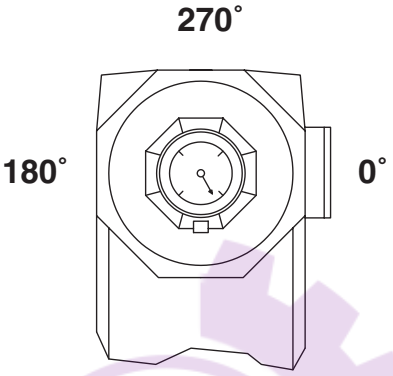

آتور صنعت
ATOORSANAT

Model	RB	VW	Revolutions *		Torque **
			1:6	1:8	
VU/VZ01S	4.96 126	3.94 100	11	—	15.9 1.8
VU/VZ11S	5.59 142	3.94 100	12	13	23.9 2.7
VU/VZ21S	6.10 155	3.94 100	14	15	35.4 4.0
VU/VZ31S	6.81 173	3.94 100	18	20	57.5 6.5
VU/VZ41S	8.58 218	5.98 152	18	—	79.7 9.0
VU51S	9.80 249	5.98 152	20	—	106 12.0

* Handwheel revolutions to cover minimum to maximum speed.
** Torque needed for speed adjustment lb-in/Nm.

15.7. Brake on Driven Shaft - BM(G)HR

In some applications, for safety reasons, it is not permissible to mount the brake on the VARIGEAR® motor. For such applications it is possible to mount a brake on the driven pulley shaft of the VARIGEAR® which is directly connected to the driven machine or to the reduction gear unit. It is available with standard manual release HR or optional screw release HF. The brake is the same type as would be mounted on a motor and is described in detail in the motor brake section. The brake rectifier is installed in a special terminal box fitted to the beltcase housing. Standard brake coil voltages are 230/460V and 346V for 575V power system.

VU

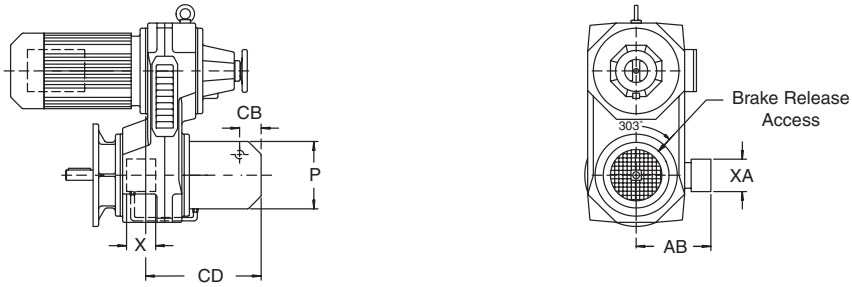

VZ

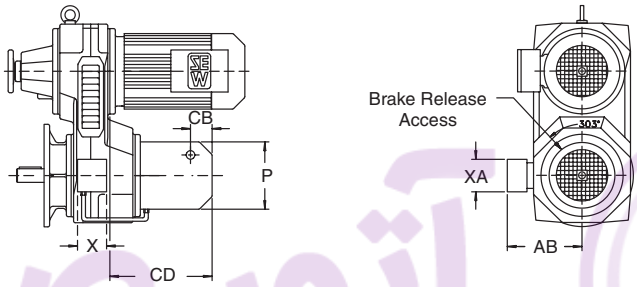

Dimensions are $\frac{\text{inch}}{\text{mm}}$

VARIGEAR® VU								
Model	**Brake Size**	**Max. Brake Torque***	**AB**	**CB**	**CD**	**P**	**X**	**XA**
VU01BMHR	BM(G)05	44 5	6.22 158	2.32 59	8.98 228	5.71 145	5.43 138	4.57 116
VU11BMHR	BM(G)1	88 10	6.34 161	2.32 59	9.80 249	5.71 145	5.43 138	4.57 116
VU21BMHR	BM(G)2	177 20	7.20 183	2.72 69	12.05 306	7.76 197	5.43 138	4.57 116
VU31BMHR	BM(G)4	354 40	8.31 211	2.72 69	13.31 338	7.76 197	5.43 138	4.57 116
VU41BMHR	BM(G)8	664 75	9.57 243	3.82 97	15.16 385	8.70 221	5.43 138	4.57 116

VARIGEAR® VZ								
Model	**Brake Size**	**Max. Brake Torque***	**AB**	**CB**	**CD**	**P**	**X**	**XA**
VZ01BMHR	BM(G)05	44 5	6.22 158	2.32 59	8.70 221	5.71 145	5.43 138	4.57 116
VZ11BMHR	BM(G)1	88 10	6.34 161	2.32 59	8.70 221	5.71 145	5.43 138	4.57 116
VZ21BMHR	BM(G)2	177 20	7.20 183	2.72 69	10.87 276	7.76 197	5.43 138	4.57 116
VZ31BMHR	BM(G)4	354 40	8.31 211	2.72 69	11.77 299	7.76 197	5.43 138	4.57 116
VZ41BMHR	BM(G)8	664 75	9.57 243	3.82 97	13.98 355	8.70 221	5.43 138	4.57 116

*Brake Torque shown as $\frac{\text{lb}-\text{in}}{\text{Nm}}$

Dimensions subject to change without notice.

آتور صنعت ATOORSANAT SEW EURODRIVE

16. Mounting Positions

It is essential when ordering a VARIGEAR® to select a desired mounting position with the following details specified:

Direction of rotation of the output shaft if a backstop is required.

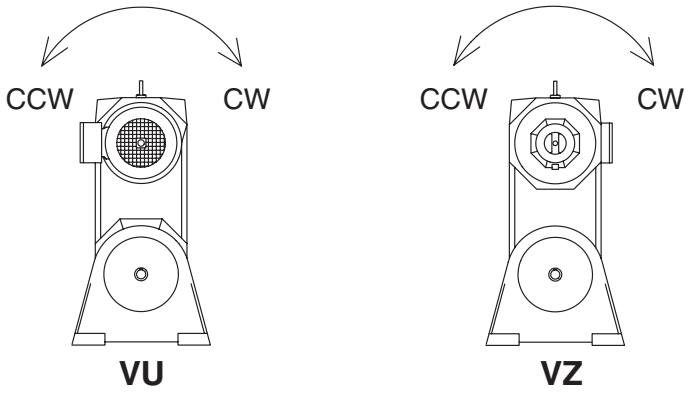

Position of the motor conduit box and cable entry: The mounting position pages show conduit box @ 0°, cable entry normal.

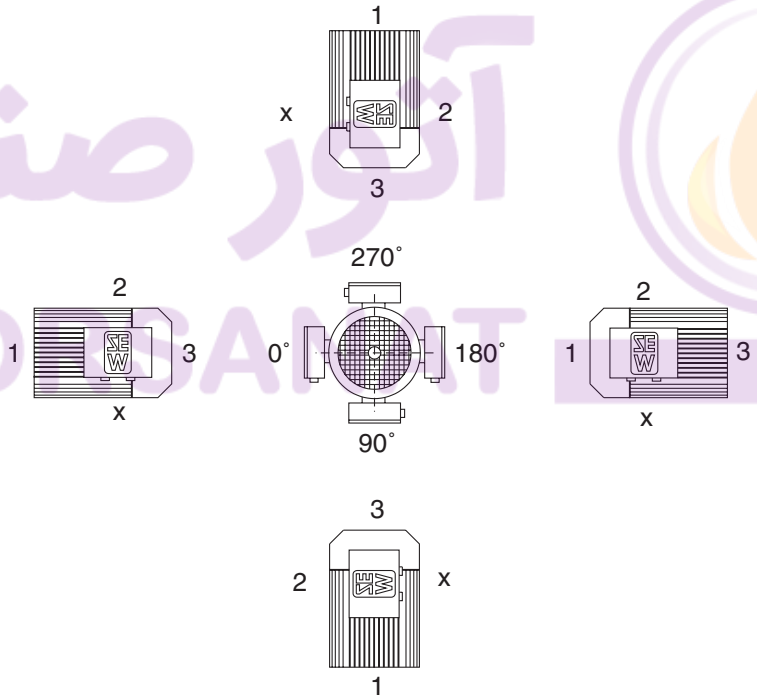

If these details are not specified then the VARIGEAR® will be supplied:

- Mounting Position - B3 or B5
- Conduit Box - 0°
- Cable Entry - Normal

Introduction to VARIGEAR® Geared Units

The SEW-Eurodrive VARIGEAR® with the R-Series (Parallel Helical Gear Units), F-Series (the SNUGGLER® Helical Gear Units), K-Series (Helical-Bevel Gear Units) or S-Series (Helical-Worm Gear Units) are designed for continuous duty under difficult operating conditions. Only materials of the highest quality are used in the manufacture of the units. In addition to the VARIGEAR® features described on page 19, these units have the following standard construction features:

- Helical Gearing in compliance with ANSI/AGMA Standard 2001-C95.
- Bevel Gearing in compliance with ANSI/AGMA Standard 2003-B97 (K-Series only).
- Gears are carburized to a hardness of 58 - 62 R_C for durability.
- Gearcase and flanges of high strength gray cast iron SAE Class 30.
- Double-lip oil seals on output shafts.
- Captured keys on output shafts.
- Foot mounted, flange mounted, foot/flange mounted, shaft mounted (with the exception of the R-Series), flange mounted with hollowshaft, or foot/flange mounted with hollowshaft.
- Split beltcase design for ease of maintenance.
- Beltcase of gray cast iron SAE Class 30 except the largest model, VU6, which is of corrosion resistant aluminum alloy.
- Dynamically balanced cast iron sheaves with chill hardened faces.
- Oil resistant, static conducting wide V-belt.
- Zinc-bronze laminated wear rings on the sliding sheave halves with a lubricated polyoxymethylene bearing surface.
- Long trouble free operation at constant speed setting without mechanical lock-up due to fretting or grooving of the adjustment mechanism or pulleys respectively.

1. Efficiency

The efficiency of the gear unit is primarily determined by the gearing and bearing friction. In the R-Series, F-Series and K-Series the efficiency ranges from approximately 95% for 3 stages of gear reduction to 98% in a single stage unit.

The S-Series ranges up to approximately 92%. However, due to the sliding friction of the worm gearing, the actual efficiency depends upon the gear ratio of the worm stage and the input speed. The rated efficiencies are achieved if the gear unit has been correctly broken in, achieved its nominal operating temperature, has the proper lubrication, and is operating within its torque rating.

Efficiency of the variable speed portion of the drive varies with speed and is approximately 85% at maximum speed when running at full load. Total efficiency of the drive unit is determined by multiplying the reducer efficiency by the VARIGEAR® efficiency.

2. Backdriving (S-Series Only)

With respect to torque driving back from the output shaft, the backdriving efficiency is far less favorable than the forward efficiency (η) and may need to be taken into account. The low backdriving efficiency may provide some braking effect in certain instances but since the actual efficiency is dependent on many factors including ambient temperature and worm speed, we request you submit full details to our engineering department if this braking effect is required.

Backdriving Efficiency $\left(\eta' = 2 - \frac{1}{\eta}\right)$

Since the SEW-Eurodrive Helical-Worm gear units have fairly high efficiencies, they can not be considered as self-locking, and should not be used if the self-locking effect is required.

3. Output Power, Torque, and Speed

The power ratings given in the selection tables for the R-Series, F-Series, and K-Series are Input Power/Output Power. The output power reflects total efficiency of the drive at maximum speed. The power ratings given for the S-Series are Input Power only. The values for power, torque, and speed always refer to the default (M1) mounting position or similar mounting position for standard features, standard ambient conditions, and standard lubricants. The output speeds have been rounded up or down. The actual output speed may vary slightly due to the motor frame size, the loading, or the supply voltage.

4. Design Variations

The VARIGEAR® drive can readily be adapted to given application requirements by turning the variable speed unit in increments of 90° in relation to the gear unit for either VU or VZ configuration.

R-Series (Parallel Helical Gear Units) - In addition to the foot or flange mount versions, the Parallel Helical Gear units, except type RX, are also available with the combination foot/flange mount. Additionally more than one flange size may be available for the flange mounted version.

These gear units are available with an extended output shaft bearing housing designated as RM. The RM gear units are primarily used for agitation applications. With the exception of output overhung and axial loads the data of the RM gear units corresponds to those of the R-series of the same size.

S-Series (Helical-Worm Gear Units) - The Helical-Worm Gear units are also available with double output shaft, double flange or flange mount opposite shaft.

Additional features available for the VARIGEAR® with gear units are:

- Nitrided pulleys for corrosion resistance
- Severe Duty option for motor protection in outdoor service or humid environments
- Totally enclosed belt case on sizes 01-41 for dusty environments
- Brake on the motor or on the driven pulley shaft
- Speed adjustment through front handwheel, right angle handwheel or electro mechanical remote control
- Digital Speed Readout
- Handwheel with speed indicator
- Input shaft in lieu of a motor
- Torque Arm (F-Series, K-Series and S-Series only)
- Shrink disc shaft mounting (F-Series, K-Series and S-Series only)

Parallel helical (R-Series) gear units from size 77, helical-bevel (K-Series) gear units size 67 through 157, helical-worm (S-Series) gear units from size 67, motors from frame size 132M, and the VARIGEAR® are supplied with lifting eyes or eyebolts which can be removed. Smaller gear units and motors do not have lifting eyebolts.

Certified dimension sheets for customer orders are available from your SEW-Eurodrive Assembly Center.

آتور صنعت ATOORSANAT

OHL and Axial Shaft Loads

Overhung Loads, OHL, are a combination of live loads acting at right angles to the drive shaft caused by gears, sprockets, pulleys, couplings, etc. as well as dead loads applied directly on the shaft. These overhung loads subject shaft bearings and shafts to stresses which, if exceeded, may cause premature failure of bearings and/or shaft breakage from bending fatigue.

1. Determination Of Overhung Load - OHL

When determining the resulting overhung load, the type of transmission element mounted on the shaft end must be considered and a transmission element factor (f_z) must be included. The overhung load exerted on the output shafts can be calculated from the following formula. The resultant overhung load (F) must not exceed the permissible overhung load for the selected gear unit.

$$F = \frac{2T}{d_o} \times f_z$$

F = equivalent OHL in lbs.
T = load torque at the drive output shaft in lb-in.
d_o = pitch diameter of the gear, sprocket, or sheave in inches
f_z = transmission element factor

The transmission element factor (f_z) takes into account an additional radial force that is imposed on the shaft due to the type of transmission element: gear, chain sprocket, or sheave. There are gear teeth separating forces, pre-tensioning of belts, etc. that must be taken into account to determine the total equivalent radial loads. From application experience the following values of f_z should be used:

Transmission Element	Comments	f_z Factor
Spur or Helical Gears	≥ 17 teeth	1.00
	< 17 teeth	1.15
Chain Sprockets	≥ 20 teeth	1.00
	< 20 teeth	1.25
	< 13 teeth	1.40
V-Belt Pulleys	—	1.75
Flat Belt Pulleys	—	2.50
Timing Belt Pulleys	—	1.30

آتور صنعت ATOORSANAT

آتور صنعت ATOORSANAT SEW EURODRIVE

2. Permissible Output Shaft Loads

The output shaft of the SEW-Eurodrive gear units are capable of accepting the axial and radial loads normally encountered by the mounting of gears, chain sprockets, belt pulleys, and shaft couplings. The permissible OHL under the most unfavorable conditions, which can be applied at the midpoint of the shaft extensions, is shown in the following OHL rating tables as F_{Ra} in lbs. When the force is not applied at the midpoint of the shaft extension, the F_{Ra} value must be adjusted according to the OHL conversion formulas.

It is possible in some instances for the OHL capacity to be substantially increased if the exact direction of the radial force is known or in the R-Series, by substituting roller bearings in place of the deep groove ball bearings which support the output shaft. In such instances it is essential that full details be given to our engineering department to check the suitability of the unit selected.

2.1. R-Series and F-Series

Except for the gear unit sizes R/RF147 and 167, an axial force, F_A, up to approximately 50% of the permissible OHL, F_{Ra}, can be accommodated. However, if the axial force exceeds this value or if there is a combination of both radial and axial loads, please submit full details to our engineering department.

2.2. K-Series and S-Series

A shaft mounted reducer should not normally experience external radial or axial forces on the hollowshaft. (From the F section) Please submit full details to our engineering department for permissible axial and radial loads for the following gear unit types: K, KA, KF, KAF, S, SA, SF and SAF.

3. Output OHL Conversion

If the resultant OHL acts at a point other than at the midpoint of the output shaft extension, the permissible OHL, F_X, must be determined at the application point of the load according to the following formula:

F_{Ra} (lb.) -Permissible overhung load at the midpoint of the output shaft extension—see the following OHL ratings tables.
X (in.) -Distance from the shoulder on the output shaft to the application point of the load.
F_X (lb.) -Permissible overhung load at the point X
a (lb-in.) -Gear unit constant - see chart for values.
b,c,d (in.) -Gear unit constant - see chart for values.

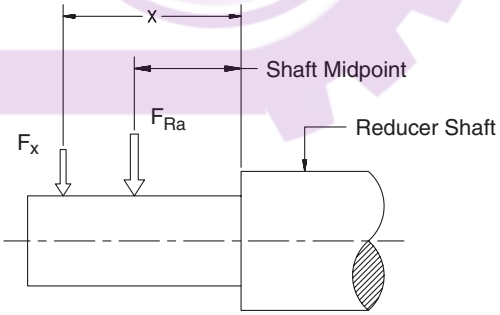

The permissible OHL is the smaller of the two values obtained from the following formula, F_{XL} and F_{XW}, and is denoted as F_X. The permissible OHL, F_X, **must be** greater than the calculated equivalent overhung load, F.

Permissible OHL, $F_{XL} = F_{Ra} \cdot \frac{c}{d + x}$ (lb)

Permissible OHL based on shaft stress, $F_{XW} = \frac{a \cdot 10^3}{b + x}$ (lb

Note: F_{xw} applies only when reducer torque (T_a) is maximum.

4.OHL Ratings Table

Model	a - lb-in.	b - in.	c - in.	d - in.
RX/RXF57	1.34	1.35	1.71	0.93
RX/RXF67	2.14	1.56	2.07	1.08
RX/RXF77	1.73	0.00	2.38	1.20
RX/RXF87	6.81	1.93	2.89	1.32
RX/RXF97	12.66	2.12	3.41	1.44
RX/RXF107	21.86	2.45	4.04	1.67
R/RF27	1.38	0.46	4.19	3.21
R/RF37	1.10	0.00	4.65	3.66
R/RF47	2.16	0.59	5.39	4.21
R/RF57	3.34	0.71	5.81	4.43
R/RF67	2.22	0.00	6.63	5.26
R/RF77	3.51	0.00	6.84	5.26
R/RF87	7.50	0.00	8.53	6.56
R/RF97	10.53	0.00	10.06	7.70
R/RF107	18.23	0.00	11.24	8.48
R/RF137	54.34	1.18	13.52	10.18
R/RF147	76.55	1.30	15.83	11.69
R/RF167	111.51	0.00	17.72	13.58
F37	0.95	0.00	4.86	3.88
F47	1.58	0.00	6.04	4.86
F57	4.86	1.26	6.72	5.34
F67	3.65	0.00	7.14	5.56
F77	6.96	0.00	8.50	6.53
F87	10.53	0.00	10.35	7.99
F97	18.50	0.00	13.78	11.02
F107	37.44	0.00	14.70	11.36
F127	83.63	0.00	17.42	13.29
F157	92.93	0.00	20.16	16.02
K37	1.25	0.00	4.86	3.88
K47	1.58	0.00	6.04	4.86
K57	6.02	1.22	6.86	5.30
K67	3.65	0.00	7.14	5.56
K77	6.81	0.00	8.50	6.53
K87	14.51	0.00	9.92	7.56
K97	24.78	0.00	12.56	9.80
K107	48.94	0.00	14.70	11.36
K127	73.54	0.00	17.46	13.33
K157	104.40	0.00	20.04	15.91
K167	166.40	0.00	24.47	19.55
K187	269.00	0.00	28.37	22.07
S/SF37	0.53	0.00	4.67	3.88
S/SF47	1.18	0.00	5.12	4.13
S/SF57	1.89	0.00	5.91	4.72
S/SF67	2.69	0.00	7.24	5.87
S/SF77	4.66	0.00	8.82	7.05
S/SF87	14.87	0.00	11.08	8.72
S/SF97	22.48	0.00	12.85	10.09

آتور صنعت ATOORSANAT

آتور صنعت ATOORSANAT SEW EURODRIVE

5.Overhung Loads - F_{Ra} - Type "R"

Model	Motor Rated Power HP P_n	Maximum Output Speed in rpm – n_{a2}									
		50-100	101-150	151-200	201-300	301-450	451-600	601-800	801-1000	1001-1200	1201-1600
RX/RXF 57	0.50	875	945	965	975	925	835	750	675	600	540
	0.75		900	940	960	900	820	740	665	595	535
	1.0		835	900	940	880	800	725	655	590	530
	1.5			855	910	850	780	710	645	580	525
	2.0				740	800	745	685	630	570	515
	3.0				145	555	705	655	610	555	505
RX/RXF 67	0.50	1300	1350	1365	1280	1140	1025	925	830	740	660
	0.75	1220	1315	1345	1255	1120	1015	915	820	735	655
	1.0	1105	1270	1315	1220	1100	995	900	810	725	655
	1.5		1215	1285	1185	1075	980	890	805	720	650
	2.0		1105	1215	1125	1030	950	870	790	710	640
	3.0			880	1055	985	915	840	770	700	630
RX/RXF 77	0.50	2250	2250	2090	1835	1630	1465	1315	1180	1050	
	0.75	2250	2250	2055	1810	1615	1455	1310	1175	1045	935
	1.0	2250	2250	2015	1785	1595	1440	1300	1170	1040	930
	1.5	2250	2190	1965	1755	1575	1425	1285	1160	1035	930
	2.0		2070	1890	1700	1535	1400	1270	1145	1025	925
	3.0		1595	1795	1640	1495	1370	1245	1130	1015	915
	5.0				1015	1320	1270	1175	1080	980	890
RX/RXF 87	1.5	2925	2835	2520	2235	2000	1805	1625	1460	1300	1165
	2.0	2815	2745	2455	2195	1970	1780	1610	1450	1295	1160
	3.0	2635	2635	2385	2140	1935	1755	1590	1435	1285	1155
	5.0		1940	2140	1980	1820	1675	1535	1395	1255	1135
	7.5		65	1420	1820	1710	1595	1475	1350	1225	1110
	10				1085	1580	1505	1410	1305	1195	1090
	15						705	1215	1185	1110	1030
RX/RXF 97	5.0	1685	3130	2870	2605	2360	2155	1955	1770	1585	1425
	7.5		2815	2680	2475	2275	2085	1910	1735	1560	1410
	10		1110	2430	2320	2155	2005	1850	1690	1530	1390
	15				1010	1880	1805	1710	1590	1460	1340
	20					1180	1710	1640	1540	1420	1310
	25						665	1370	1430	1350	1260
	30							625	1260	1280	1210
RX/RXF 107	10		1575	2745	2655	2500	2340	2165	1985	1800	1635
	15			640	2130	2250	2160	2035	1895	1735	1590
	20				275	1580	1950	1880	1780	1660	1540
	25					450	1440	1750	1690	1600	1490
	30						650	1480	1600	1530	1440

آتور صنعت ATOORSANAT

Model	Motor Rated Power HP P_n	Maximum Output Speed in rpm – n_{a2}									
		< 20	21-40	41-60	61-90	91-130	131-180	181-250	251-350	351-500	501-700
R/RF 27	0.50	980	810	720	635	565	510	460	415	370	330
	0.75	840	775	695	620	555	505	455	410	365	330
	1.0	180	730	665	600	540	495	450	405	360	325
R/RF 37	.50	1330	1195	1055	925	825	745	670	600	530	475
	.75	1255	1165	1035	915	815	735	660	595	530	475
	1.0	990	1125	1005	895	805	725	655	590	525	475
R/RF 47	0.50	1375	1230	1080	950	845	760	680	610	540	485
	0.75	1355	1200	1060	940	835	755	675	610	540	485
	1.0	1310	1170	1040	925	825	745	675	605	540	485
	1.5	1235	1130	1015	905	815	740	665	600	535	480
	2.0		1070	975	880	795	725	655	590	530	475
	3.0		995	925	845	770	710	645	585	525	475
R/RF 57	0.50	1800	1545	1355	1190	1055	945	850	760	675	
	0.75	1785	1520	1340	1180	1045	945	845	760	675	605
	1.0	1765	1495	1320	1165	1040	935	840	755	675	605
	1.5	1725	1465	1300	1150	1030	930	835	750	670	600
	2.0	1400	1380	1245	1115	1005	910	825	745	665	595
	3.0	910	1350	1225	1105	995	905	820	740	660	595
R/RF 67	0.50	2225	2235	2115	1855	1645	1480	1330	1190	1060	945
	0.75	2205	2230	2100	1845	1640	1475	1325	1185	1055	945
	1.0	2170	2225	2085	1835	1630	1470	1320	1185	1055	945
	1.5	2005	2205	2050	1815	1615	1460	1315	1180	1050	940
	2.0	1695	2170	2015	1790	1600	1445	1305	1170	1045	935
	3.0		2005	1955	1745	1570	1425	1290	1160	1035	930
	5.0			1810	1655	1505	1380	1255	1135	1020	920
	5.4			1785	1635	1495	1370	1250	1130	1015	920
	7.5				1550	1435	1325	1215	1110	1000	905
R/RF77	0.50	2925	2925	2590	2275	2005	1800	1620	1445		
	0.75	2925	2925	2565	2250	2000	1800	1615	1445		
	1.0	2880	2905	2565	2245	1995	1795	1610	1440		
	1.5	2790	2860	2520	2230	1980	1785	1605	1440	1280	1145
	2.0	2635	2815	2500	2205	1965	1775	1600	1435	1275	1145
	3.0	2205	2745	2455	2175	1945	1755	1585	1425	1270	1140
	5.0		2420	2335	2095	1890	1720	1555	1405	1255	1130
	5.4		2340	2320	2085	1880	1710	1555	1400	1255	1125
	7.5			2050	2010	1830	1675	1525	1380	1240	1120
	10				1665	1760	1625	1490	1355	1220	1105
	12.5				1115	1595	1585	1465	1335	1210	1095
	15					1160	1500	1430	1310	1195	1080
R/RF87	0.50	4500									
	0.75	4500									
	1.0	4500	4165	3645	3195	2835	2545	2275	2045	1815	
	1.5	4500	4140	3625	3175	2815	2545	2275	2040	1815	
	2.0	4500	4095	3600	3175	2815	2520	2275	2035	1810	
	3.0	4500	4030	3555	3150	2790	2520	2275	2030	1805	
	5.0	3980	3915	3485	3090	2750	2480	2240	2015	1795	
	5.4	3850	3895	3465	3085	2745	2475	2240	2010	1795	
	7.5		3760	3375	3015	2700	2455	2220	2000	1785	
	10		3580	3265	2950	2655	2410	2190	1980	1770	
	12.5		3445	3175	2880	2610	2385	2170	1960	1760	
	15			3085	2815	2565	2365	2145	1945	1745	
	20				2660	2450	2270	2090	1910	1720	
	25				2520	2360	2210	2040	1870	1690	
	30				2410	2270	2150	2000	1840	1670	

ATOORSANAT آتور صنعت

آتور صنعت ATOORSANAT SEW EURODRIVE

Model	Motor Rated Power HP P_n	Maximum Output Speed in rpm – n_{a2}									
		< 20	21-40	41-60	61-90	91-130	131-180	181-250	251-350	351-500	501-700
R/RF97	0.50	6460									
	0.75	6460									
	1.0	6435									
	1.5	6435									
	2.0	6415	5335	4680	4095	3645	3265	2925			
	3.0	6390	5290	4635	4075	3625	3265	2925	2610	2340	
	5.0	6240	5170	4580	4035	3585	3225	2910	2610	2320	2080
	5.4	6210	5155	4570	4030	3580	3220	2905	2610	2320	2075
	7.5	5875	5040	4500	3985	3555	3195	2880	2590	2320	2070
	10	4930	4905	4390	3915	3510	3175	2860	2590	2295	2065
	12.5		4795	4320	3870	3465	3150	2860	2565	2295	2055
	15		4660	4230	3805	3420	3130	2835	2545	2275	2050
	20		4390	4050	3670	3350	3060	2790	2520	2250	2030
	25			3870	3580	3260	2990	2750	2500	2240	2020
	30			3710	3470	3200	2950	2700	2450	2220	2000
R/RF107	0.50	8325									
	0.75	8305									
	1.0	8280									
	1.5	8235									
	2.0	8190	6550								
	3.0	8100	6505								
	5.0	7910	6410								
	5.4	7875	6390	5650	4950	4410	3960	3555	3195		
	7.5	7695	6300	5580	4930	4390	3940	3555	3175		
	10	7450	6190	5490	4860	4345	3915	3535	3175	2815	2520
	12.5	7270	6100	5425	4815	4320	3895	3510	3150	2815	2520
	15	6795	5985	5355	4770	4275	3870	3490	3150	2815	2520
	20		5740	5200	4660	4210	3830	3470	3130	2790	2500
	25		5540	5060	4570	4140	3780	3420	3110	2770	2500
	30		5330	4930	4480	4070	3740	3400	3060	2750	2480
	40			4590	4250	3920	3620	3310	3020	2720	2450
	50			4340	4100	3800	3530	3260	2970	2680	
	60				3870	3650	3420	3170	2900	2660	
R/RF137	0.50	13815									
	0.75	13815									
	1.0	13815									
	1.5	13815									
	2.0	13815	13815								
	3.0	13795	13815								
	5.0	13760									
	5.4	13750									
	7.5	13705									
	10	13590									
	12.5	13500									
	15	13345	13705	13700	13800	13815	13255	12105	11005		
	20	12900	13600	13700	13800	13800	13100	12000	10900	9860	
	25	12400	13500	13700	13700	13800	13000	11900	10800	9810	
	30	11800	13300	13600	13700	13800	12800	11800	10800	9770	
	40		12900	13400	13600	13400	12500	11500	10600	9650	
	50		12500	13200	13600	13100	12200	11400	10500	9560	
	60		11600	12900	13300	12600	11900	11100	10300	9430	

آتور صنعت ATOORSANAT

Model	Motor Rated Power HP P_n	Maximum Output Speed in rpm – n_{a2}									
		< 20	21-40	41-60	61-90	91-130	131-180	181-250	251-350	351-500	501-700
R/RF147	0.50	16785									
	0.75	16785									
	1.0	16785									
	1.5	16785									
	2.0	16785									
	3.0	16765									
	5.0	16745	16785								
	5.4	16740	16785								
	7.5	16720	16765								
	10	16675	16765								
	12.5	16605	16740								
	15	16540	16720	16800	16800	16800	16800	16800	15930		
	20	16300	16700	16700	16800	16800	16800	16800	15900	14300	
	25	16000	16600	16700	16700	16800	16800	16800	15800	14300	
	30	15700	16500	16700	16700	16800	16800	16800	15800	14200	
	40	14700	16300	16600	16700	16700	16800	16800	15600	14100	
	50	13700	16100	16500	16700	16700	16700	16800	15500	14100	
	60		15700	16300	16600	16700	16700	16800	15400	14000	
R/RF167	2.0	27000									
	3.0	27000									
	5.0	27000									
	5.4	27000									
	7.5	27000									
	10	27000									
	12.5	27000									
	15	27000									
	20	27000									
	25	27000									
	30	27000									
	40	27000	27000	27000	27000	27000	25800	23500			
	50	27000	27000	27000	27000	27000	25600				
	60	27000	27000	27000	27000	27000	25400				

آتور صنعت
ATOORSANAT

آتور صنعت ATOORSANAT SEW EURODRIVE

6. Overhung Loads - F_{Ra} - Type "F"

Model	Motor Rated Power HP P_n	Maximum Output Speed in rpm - n_{a2}													
		<10	11-25	26-40	41-60	61-90	91-130	131-170	171-220	221-280	281-350	351-420	421-500	501-650	651-900
F..37	0.50		1170	1220	1140	1010	910	840	770	720	670	630	600	550	500
	0.75		1060	1180	1090	980	890	820	760	710	660	620	590	540	490
	1.0		860	1110	1040	950	860	800	740	700	650	620	590	540	490
	1.5			940	950	890	820	770	720	680	640	600	570	530	480
	2.0				840	820	770	730	690	650	620	590	560	520	470
F..47	0.50	1630	1830	1850	1710	1510	1340	1240	1140	1050	980	920	870		
	0.75	1060	1790	1840	1670	1480	1330	1220	1130	1040	970	920	870	800	
	1.0		1710	1800	1620	1450	1310	1200	1110	1040	970	910	860	790	
	1.5		1520	1690	1550	1400	1270	1180	1090	1020	950	900	850	790	
	2.0			1550	1460	1340	1230	1150	1070	1000	940	890	840	780	
F..57	0.50	2275	2340	2340	2275	1985	1760	1615	1485	1370	1275	1200	1135		
	0.75	2185	2320	2340	2235	1970	1750	1605	1475	1365	1270	1195	1130	1035	
	1.0	2045	2275	2320	2200	1945	1735	1595	1765	1360	1265	1190	1125	1035	
	1.5	1850	2225	2295	2160	1920	1715	1580	1455	1350	1260	1185	1120	1030	
	2.0		2130	2240	2100	1875	1685	1555	1440	1335	1245	1175	1115	1025	925
	3.0		2000	2175	2025	1825	1650	1530	1420	1320	1235	1165	1105	1015	920
	5.0			1855	1780	1665	1540	1445	1350	1270	1190	1130	1075	995	
	5.4			1795	1740	1640	1520	1430	1340	1260	1185	1125	1070	990	
	7.5				1550	1510	1430	1360	1290	1215	1150	1100	1045	975	
F..67	0.50	2930	2930	2930	2930	2930	2930	2930	2840	2630	2480	2340			
	0.75	2880	2930	2930	2930	2930	2930	2930	2810	2630	2450	2340	2210	2050	
	1.0	2700	2930	2930	2930	2930	2930	2930	2810	2610	2450	2320	2210	2050	
	1.5	2300	2930	2930	2930	2930	2930	2930	2790	2610	2450	2320	2200	2040	1850
	2.0		2840	2930	2930	2930	2930	2930	2770	2590	2430	2320	2200	2030	1850
	3.0		2590	2880	2930	2930	2930	2930	2750	2570	2410	2300	2180	2020	1840
	5.0			2430	2790	2930	2930	2840	2680	2500	2360	2250	2150	2000	1820
	5.4			2430	2790	2930	2930	2840	2680	2500	2360	2250	2150	2000	1820
	7.5				2540	2840	2930	2770	2610	2450	2320	2220	2120	1980	1810
F..77	0.50	4390	4410	4410	4410	4410	4300	3980	3690	3420	3220				
	0.75	4390	4410	4410	4410	4410	4300	3960	3690	3420	3200	3040			
	1.0	4370	4390	4410	4410	4410	4280	3960	3670	3420	3200	3040	2880		
	1.5	4250	4390	4390	4410	4410	4250	3940	3670	3420	3200	3040	2880	2660	
	2.0	3980	4370	4390	4410	4410	4230	3920	3650	3400	3200	3020	2880	2660	2410
	3.0	3260	4340	4390	4390	4410	4210	3890	3620	3380	3170	3020	2860	2660	2410
	5.0		3890	4300	4370	4390	4100	3800	3560	3330	3130	2970	2840	2630	2390
	5.4		3890	4300	4370	4390	4100	3800	3560	3330	3130	2970	2840	2630	2390
	7.5		3260	4070	4340	4370	4010	3740	3510	3290	3110	2950	2810	2610	2390
	10			3620	4160	4160	3870	3650	3420	3220	3040	2900	2770	2590	2360
	12.5			3130	3960	4030	3780	3580	3380	3170	3020	2880	2750	2570	2340
	15				3690	3870	3670	3490	3310	3130	2970	2840	2720	2540	2340

Model	Motor Rated Power HP P_n	Maximum Output Speed in rpm - n_{a2}													
		<10	11-25	26-40	41-60	61-90	91-130	131-170	171-220	221-280	281-350	351-420	421-500	501-650	651-900
F..87	0.50	6750	6460												
	0.75	6750	6390												
	1.0	6685	6345	5470	4815	4210	3735	3420	3150	2905	2700				
	1.5	6570	6235	5400	4770	4185	3735	3420	3150	2905	2700	2545			
	2.0	6415	6120	5335	4725	4165	3690	3400	3130	2905	2700	2545	2410	2200	
	3.0	6120	5920	5200	4635	4095	3670	3375	3105	2880	2680	2520	2385	2195	
	5.0	4410	5460	4930	4445	3980	3575	3295	3050	2840	2640	2505	2370	2175	1960
	5.4	3940	5380	4885	4410	3960	3555	3285	3040	2835	2635	2500	2365	2175	1960
	7.5		4950	4615	4230	3825	3490	3220	2995	2790	2610	2475	2340	2155	1945
	10		4345	4230	3985	3670	3355	3130	2925	2745	2565	2430	2320	2135	1930
	12.5		3895	3940	3780	3535	3265	3060	2880	2700	2545	2410	2295	2115	1915
	15			3600	3555	3400	3175	2995	2815	2655	2500	2365	2250	2095	1900
	20			2880	3080	3060	2950	2810	2680	2540	2410	2300	2200	2050	1870
	25				2660	2770	2750	2680	2570	2450	2340	2240	2150	2010	1840
	30				2230	2500	2570	2520	2450	2360	2270	2180	2100	1970	1810
F..97	0.50	8530													
	0.75	8505													
	1.0	8440													
	1.5	8370													
	2.0	8260	8485	7785	6865	6030	5355	4905	4525	4165					
	3.0	8055	8415	7675	6775	5985	5310	4885	4500	4165	3870	3645			
	5.0	7490	8265	7420	6605	5870	5240	4825	4445	4125	3830	3625	3425	3150	2840
	5.4	7380	8235	7380	6570	5850	5220	4815	4435	4120	3825	3625	3420	3150	2840
	7.5	6705	7945	7135	6415	5740	5155	4750	4390	4075	3805	3600	3400	3130	2810
	10		7380	6775	6190	5580	5040	4680	4320	4030	3760	3555	3375	3105	2790
	12.5		6955	6525	6010	5470	4975	4615	4275	3985	3735	3535	3355	3085	2790
	15		6480	6210	5805	5335	4860	4545	4230	3940	3690	3510	3330	3060	2770
	20		5400	5540	5360	5020	4660	4390	4100	3850	3620	3440	3260	3040	2750
	25			4950	4970	4770	4480	4230	4010	3760	3560	3380	3220	2990	2720
	30			4390	4590	4500	4300	4100	3890	3690	3490	3330	3170	2950	2700
F..107	0.50	14605													
	0.75	14560	14625												
	1.0	14490	14625												
	1.5	14400	14580												
	2.0	14290	14535												
	3.0	14065	14470												
	5.0	13550	14280												
	5.4	13455	14245	12690	11340	10125	9115	8440	7830	7290					
	7.5	12915	14065	12510	11230	10035	9045	8395	7785	7270					
	10	12085	13660	12240	11050	9925	8980	8325	7740	7225	6775	6435	6120	5670	
	12.5	11385	13345	12040	10915	9835	8910	8280	7720	7200	6750	6415	6100	5650	
	15	10510	12985	11815	10755	9745	8845	8235	7675	7180	6730	6390	6075	5650	
	20		12200	11300	10400	9520	8690	8100	7580	7090	6680	6350	6050		
	25		11500	10900	10100	9320	8550	8010	7490	7040	6620	6300	6010		
	30		10800	10400	9830	9110	8420	7900	7430	6980	6570	6260	5960		
	40			9360	9140	8640	8080	7650	7220	6820	6460	6170			
	50			8600	8620	8300	7850	7470	7090	6710	6370				
	60			6930	7900	7830	7520	7220	6890	6550	6230				

ATOORSANAT

آتور صنعت ATOORSANAT SEW EURODRIVE

Model	Motor Rated Power HP P_n	Maximum Output Speed in rpm - n_{a2}													
		<10	11-25	26-40	41-60	61-90	91-130	131-170	171-220	221-280	281-350	351-420	421-500	501-650	651-900
F..127	0.50	20300													
	0.75	20300													
	1.0	20300													
	1.5	20300	20300												
	2.0	20300	20300												
	3.0	20300	20300												
	5.0	20300	20300												
	5.4	20300	20300												
	7.5	20300	20115												
	10	20300	19780												
	12.5	20300	19510												
	15	20300	19195	17125	15415	13815	12490	11590	10755	10035	9430				
	20	20300	18500	16700	15100	13600	12400	11500	10700	9990	9360	8890	8460		
	25	19200	17900	16300	14900	13500	12200	11400	10600	9920	9320	8870	8420		
	30		17300	16000	14600	13300	12100	11300	10600	9880	9290	8820	8390		
	40		15800	15000	14000	12900	11900	11100	10400	9740	9180	8730	8330		
	50		14800	14400	13600	12600	11700	10900	10300	9650	9110	8660			
	60		13400	13500	13000	12200	11400	10700	10100	9520	9000	8600			
F..157	2.0	27000	25450												
	3.0	27000	25360												
	5.0	27000	25145												
	5.4	27000	25110												
	7.5	27000	24910												
	10	27000	24640												
	12.5	27000	24415												
	15	26865	24165	21355	19125	17055	15370	14245	13210	12310					
	20	25900	23600	21000	18900	16900	15300	14200	13100	12300	11500	10900			
	25	24800	23200	20700	18700	16800	15200	14100	13100	12200	11500	10800			
	30	23400	22700	20400	18500	16700	15100	14000	13100	12200	11400	10800			
	40	13500	21500	19700	18000	16300	14900	13800	12900	12100	11300	10800			
	50		20700	19200	17700	16100	14700	13700	12800	12000	11300	10700			
	60		19600	18500	17200	15800	14500	13500	12700	11900	11200	10600			

ATOORSANAT

7.Overhung Loads - F_{Ra} - Type "K"

Model	Motor Rated Power HP P_n	Maximum Output Speed in rpm - n_{a2}												
		<10	11-25	26-40	41-60	61-90	91-130	131-170	171-220	221-280	281-350	351-420	421-500	501-650
K..37	0.50		1295	1160	1040	930	835	770	710	660	615	580	550	505
	0.75		1185	1090	995	900	815	755	700	650	610	575	545	500
	1.0		1060	1015	945	865	790	735	685	640	600	565	540	495
	1.5			880	855	805	750	705	660	620	585	555	525	490
	2.0				750	740	700	670	630	600	565	540	515	480
K..47	0.50	1645	1835	1855	1705	1510	1345	1235	1140	1055	980	925	875	
	0.75	1290	1790	1840	1665	1480	1325	1220	1125	1045	975	920	870	800
	1.0		1715	1790	1620	1450	1305	1205	1115	1035	965	910	865	795
	1.5		1535	1675	1540	1395	1270	1175	1095	1020	950	900	855	790
	2.0			1540	1450	1335	1225	1145	1070	1000	935	890	845	780
	3.0			1270	1290	1235	1155	1090	1025	965	910	865	825	765
	5.0				1110	1110	1070	1030	980	930	880	840	800	
K..57	0.50	2185	2250	2275	2275	2000	1775	1625	1495	1380	1285			
	0.75	2095	2225	2250	2245	1980	1760	1615	1485	1375	1280	1205	1140	
	1.0	1965	2185	2230	2205	1955	1740	1600	1475	1365	1270	1200	1135	
	1.5	1715	2140	2200	2165	1925	1725	1585	1465	1355	1265	1195	1125	
	2.0		2050	2155	2095	1875	1690	1560	1445	1340	1255	1185	1120	1030
	3.0		1925	2090	2010	1820	1650	1530	1420	1325	1240	1170	1110	1020
	5.0			1790	1745	1645	1530	1440	1350	1265	1195	1135	1080	
	5.4			1725	1700	1615	1510	1420	1335	1260	1185	1125	1075	
	7.5				1485	1470	1410	1345	1280	1210	1150	1095	1045	
K..67	0.50	2925	2925	2925	2925	2925	2925	2925	2905	2700	2520			
	0.75	2880	2925	2925	2925	2925	2925	2925	2905	2700	2520	2385		
	1.0	2725	2925	2925	2925	2925	2925	2925	2880	2680	2520	2385		
	1.5	2320	2925	2925	2925	2925	2925	2925	2860	2680	2500	2385		
	2.0		2835	2925	2925	2925	2925	2925	2835	2655	2500	2365	2250	
	3.0		2610	2880	2925	2925	2925	2925	2815	2635	2475	2340	2235	
	5.0			2525	2820	2925	2925	2890	2735	2570	2420	2300	2200	
	5.4			2455	2790	2925	2925	2880	2725	2565	2410	2295	2195	
	7.5				2565	2835	2925	2790	2635	2500	2365	2250	2160	
K..77	0.50	4500	4500	4500	4500	4500	4410	4075	3760	3510				
	0.75	4455	4500	4500	4500	4500	4390	4050	3760	3510	3285			
	1.0	4410	4500	4500	4500	4500	4365	4050	3760	3490	3265	3105		
	1.5	4255	4500	4500	4500	4500	4345	4030	3735	3490	3265	3085	2950	
	2.0	4005	4455	4500	4500	4500	4320	4005	3715	3465	3265	3085	2925	
	3.0	3310	4365	4455	4500	4500	4275	3960	3690	3445	3240	3060	2925	
	5.0		3995	4330	4445	4485	4165	3890	3635	3405	3200	3045	2885	
	5.4		3915	4300	4435	4480	4140	3870	3625	3400	3195	3040	2880	
	7.5		3310	4095	4345	4390	4050	3805	3555	3355	3150	2995	2860	
	10			3670	4165	4185	3915	3690	3465	3285	3105	2950	2815	
	12.5			3195	3985	4030	3805	3600	3400	3220	3060	2925	2790	
	15				3735	3850	3670	3510	3330	3175	3015	2880	2770	
K..87	0.50	6550	6550											
	0.75	6525	6550											
	1.0	6525	6550	6550	6100	5425	4860	4500	4165	3870				
	1.5	6505	6525	6550	6055	5380	4840	4480	4165	3870				
	2.0	6460	6525	6525	5985	5355	4815	4455	4140	3850	3625	3420	3265	
	3.0	6370	6505	6525	5895	5290	4770	4435	4120	3850	3600	3420	3240	
	5.0		6465	6240	5685	5155	4675	4355	4060	3790	3560	3380	3225	
	5.4		6460	6190	5650	5130	4660	4345	4050	3780	3555	3375	3220	
	7.5		6300	5895	5470	4995	4570	4275	4005	3735	3535	3355	3195	
	10		5650	5490	5175	4815	4455	4185	3915	3690	3490	3310	3150	
	12.5		5130	5175	4975	4680	4345	4095	3870	3645	3445	3285	3130	
	15			4815	4725	4500	4230	4005	3805	3600	3400	3240	3105	
	20			4010	4210	4160	3980	3830	3650	3470	3310	3170	3040	
	25				3740	3850	3780	3670	3530	3380	3220	3110	2990	
	30				3290	3530	3580	3510	3400	3290	3150	3040	2930	

Model	Motor Rated Power HP P_n	Maximum Output Speed in rpm - n_{a2}												
		<10	11-25	26-40	41-60	61-90	91-130	131-170	171-220	221-280	281-350	351-420	421-500	501-650
K..97	0.50	9000	9000											
	0.75	9000	9000											
	1.0	9000	9000											
	1.5	9000	9000											
	2.0	9000	9000	8955	7990	7110	6390							
	3.0	9000	9000	8820	7900	7065	6370	5895						
	5.0	9000	9000	8555	7725	6930	6275	5815	5410	5045	4730	4485		
	5.4	9000	9000	8505	7695	6910	6255	5805	5400	5040	4725	4480		
	7.5	9000	9000	8260	7515	6795	6190	5740	5355	5020	4705	4455		
	10		8485	7875	7270	6640	6075	5670	5290	4950	4660	4435		
	12.5		8035	7605	7090	6505	5985	5605	5245	4905	4635	4410		
	15		7515	7270	6865	6370	5875	5515	5175	4860	4590	4365		
	20		6370	6570	6390	6050	5670	5360	5040	4770	4500	4300		
	25			5940	5990	5780	5470	5200	4930	4680	4430	4250		
	30			5330	5580	5510	5290	5060	4840	4590	4370	4190		
K..107	0.50	14625	14625											
	0.75	14625	14625											
	1.0	14625	14625											
	1.5	14625	14625											
	2.0	14625	14625											
	3.0	14625	14625											
	5.0	14625	14330											
	5.4	14625	14265	12625	11295	10105	9090	8415	7810	7290				
	7.5	14625	13930	12420	11160	10015	9025	8370	7785	7245				
	10	14625	13455	12105	10960	9880	8935	8305	7720	7225	6775	6415		
	12.5	14625	13095	11880	10800	9765	8865	8260	7675	7180	6750	6390		
	15	13680	12670	11610	10645	9655	8800	8190	7630	7135	6705	6370		
	20		11700	11000	10200	9380	8620	8060	7540	7070	6640	6320		
	25		10900	10500	9900	9160	8460	7920	7430	7000	6590	6280		
	30		10100	10000	9590	8960	8300	7810	7340	6910	6530	6210		
	40			8800	8750	8390	7920	7520	7130	6750	6390			
	50			7920	8170	8010	7650	7310	6950	6620				
	60			6640	7360	7470	7270	7020	6730	6440				
K..127	0.50	18655												
	0.75	18655												
	1.0	18655												
	1.5	18630	18655											
	2.0	18630	18655											
	3.0	18630	18655											
	5.0	18590	18630											
	5.4	18585	18630											
	7.5	18565	18630											
	10	18475	18610											
	12.5	18405	18610											
	15	18315	18585	16945	15280	13725	12420	11520	10710					
	20	18000	18100	16400	15000	13500	12300	11400	10600	9920	9320			
	25	17100	17400	16000	14700	13300	12100	11300	10600	9880	9270			
	30		16800	15600	14400	13100	12000	11200	10500	9810	9230			
	40		15100	14600	13700	12700	11700	11000	10300	9650	9110			
	50		13900	13800	13200	12400	11500	10800	10100	9560				
	60		12300	12800	12500	11900	11100	10600	9970	9410				

آتور صنعت ATOORSANAT

Model	Motor Rated Power HP P_n	Maximum Output Speed in rpm - n_{a2}												
		<10	11-25	26-40	41-60	61-90	91-130	131-170	171-220	221-280	281-350	351-420	421-500	501-650
K..157	2.0	26235												
	3.0	26235												
	5.0	26220	25445											
	5.4	26215	25405											
	7.5	26190	25180											
	10	26145	24885	21895										
	12.5	26100	24640	21735										
	15	26035	24370	21580										
	20	25900	23800	21200										
	25	25700	23300	20900										
	30	25400	22700	20600										
	40		21500	19800	18100	16500	15000	14000						
	50		20600	19200	17800	16200	14800	13800						
	60		19300	18400	17200	15900	14600	13700						
K 167	2.0	33800												
	3.0	33800												
	5.0	33800												
	5.4	33800	33800											
	7.5	33800	33800											
	10	33800	33800	33800										
	12.5	33800	33800	33800										
	15	33800	33800	33800										
	20	33800	33800	33800										
	25	33800	33800	33700										
	30	33800	33800	33500										
	40	33800	33800	32800	29600	26500	24000	22200						
	50	33800	33800	32300	29300	26300	23800							
	60			31700	28800	26000	23600							
K 187	2.0	42800												
	3.0	42800												
	5.0	42800												
	5.4	42800	42800											
	7.5	42800	42800											
	10	42800	42800											
	12.5	42800	42800											
	15	42800	42800											
	20	42800	42800											
	25	42800	42800											
	30	42800	42800											
	40	42800	42800											
	50	42800	42700											
	60	42800	41800											

آتور صنعت
ATOORSANAT

آتور صنعت ATOORSANAT SEW EURODRIVE

8.Overhung Loads - F_{Ra} - Type "S"

Model	Motor Rated Power Hp P_n	Maximum Output Speed in rpm – n_{a2}									
		<10	11-30	31-50	51-70	71-100	101-130	131-161	161-200	201-250	251-400
S/SF 37	.50		675	660	620	575	540	515	485	455	400
	.75			570	560	530	505	485	460	440	385
	1.0				485	480	465	450	435	415	375
	1.5					350	400	400	390	385	355
S/SF 47	.50	1175	1175	1045	960	875	810	765	715	670	580
	.75		1065	980	910	835	785	745	700	655	570
	1.0		940	900	855	795	750	720	680	640	560
	1.5			775	765	735	700	675	645	615	545
	2.0				655	655	645	625	605	580	525
S/SF 57	.50	1800	1855	1740	1575	1420	1305	1225	1145	1065	920
	.75	1710	1830	1685	1535	1385	1285	1210	1130	1055	910
	1.0	1555	1795	1620	1490	1355	1260	1185	1110	1040	900
	1.5		1640	1515	1415	1300	1215	1150	1085	1020	890
	2.0		1435	1390	1325	1235	1170	1110	1050	990	875
S/SF 67	.50	2385	2320	2005	1810	1620	1495	1400	1305	1215	1045
	.75	2340	2250	1955	1775	1600	1475	1385	1290	1205	1035
	1.0	2250	2160	1900	1735	1570	1455	1365	1280	1195	1030
	1.5	2030	2010	1810	1670	1520	1420	1340	1255	1175	1020
	2.0		1840	1705	1595	1465	1375	1305	1230	1155	1005
	3.0		1540	1525	1465	1375	1305	1245	1180	1115	985
	5.0			935	1170	1170	1145	1115	1075	1030	930
	5.4			795	1120	1135	1115	1090	1055	1015	925
	7.5				455	835	970	970	960	935	870
S/SF 77	.50	3600	3465	2970	2655	2385	2185	2040	1900	1765	
	.75	3600	3420	2925	2635	2365	2165	2030	1890	1760	1510
	1.0	3600	3355	2880	2610	2340	2150	2015	1880	1750	1505
	1.5	3600	3240	2815	2565	2295	2125	1995	1860	1735	1500
	2.0	3490	3105	2725	2500	2250	2095	1970	1845	1720	1485
	3.0	3105	2880	2590	2410	2190	2040	1925	1805	1690	1470
	5.0		2235	2290	2180	2035	1920	1825	1730	1630	1430
	5.4		2095	2235	2140	2005	1895	1810	1715	1620	1425
	7.5		810	1755	1935	1860	1785	1715	1640	1560	1390
	10			625	1220	1610	1625	1585	1535	1475	1335
	12.5				595	1145	1405	1485	1455	1410	1295
	15					630	990	1195	1355	1335	1245
S/SF 87	1.0	6750	6750	6750	6235	5625	5220	4905	4615	4320	
	1.5	6750	6750	6750	6210	5605	5200	4885	4590	4300	3760
	2.0	6730	6750	6730	6145	5560	5175	4860	4570	4275	3735
	3.0	6660	6750	6615	6055	5515	5130	4840	4545	4255	3715
	5.0	6470	6695	6330	5865	5355	5015	4745	4465	4195	3695
	5.4	6435	6685	6280	5830	5335	4995	4725	4455	4185	3690
	7.5	4860	6550	6030	5625	5200	4885	4635	4390	4140	3645
	10		5940	5650	5355	5020	4750	4525	4300	4075	3600
	12.5		4995	5380	5155	4860	4635	4435	4230	4005	3555
	15		3085	5040	4930	4705	4500	4320	4140	3940	3535
	20			3080	4410	4340	4230	4100	3960	3780	3440
	25			675	2990	4030	3980	3890	3780	3670	3350
	30				1370	3260	3740	3710	3650	3530	3260
S/SF 97	2.0	8980	9000	8485	7720	6955	6460				
	3.0	8955	9000	8370	7630	6910	6415	6055	5670	5310	
	5.0	8845	8960	8140	7460	6790	6320	5975	5615	5270	4620
	5.4	8820	8955	8100	7425	6775	6300	5965	5605	5265	4615
	7.5	8665	8775	7875	7270	6660	6235	5895	5560	5220	4590
	10	7380	8260	7560	7045	6505	6100	5805	5470	5155	4545
	12.5	4815	7875	7335	6885	6390	6010	5715	5425	5110	4525
	15		7425	7065	6685	6255	5895	5650	5355	5065	4480
	20		5870	6460	6260	5940	5670	5450	5200	4950	4410
	25		3040	5940	5900	5670	5470	5270	5060	4840	4340
	30			4820	5540	5420	5270	5110	4930	4730	4280

آتور صنعت ATOORSANAT

Mounting Positions

1. General Information

It is essential when ordering a drive to select the desired mounting position to ensure the correct amount of lubricant is supplied with the drive. The following details must also be supplied:

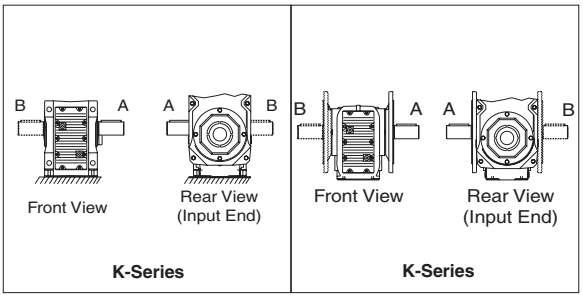

- Output shaft and flange projection A, B, or AB. The mounting position pages show A. (K-Series or S-Series only)

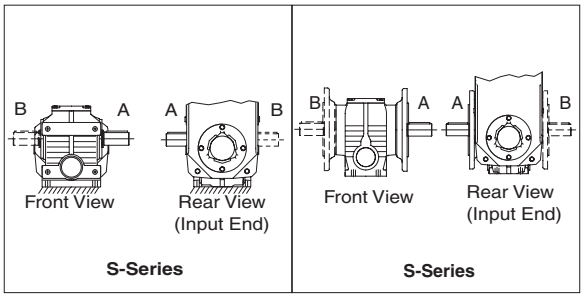

- Position of the motor conduit box and cable entry.
  The mounting position pages show the conduit box at 0°, and cable entry “x”.

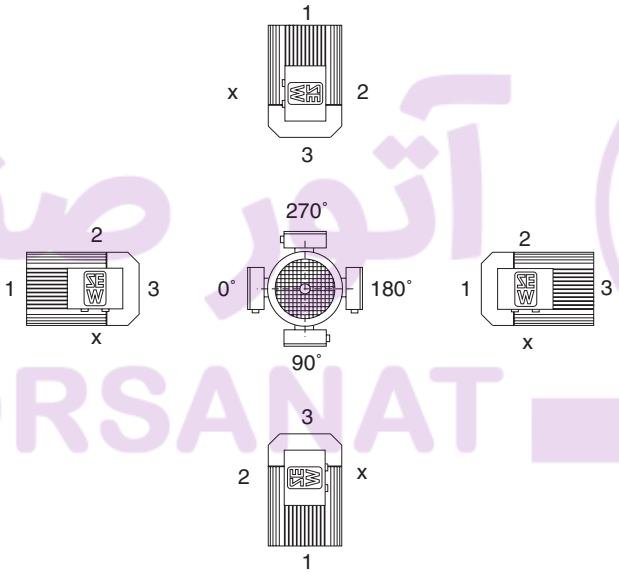

- Direction of rotation of the output shaft (only if a backstop or a unidirectional torque monitor is required).

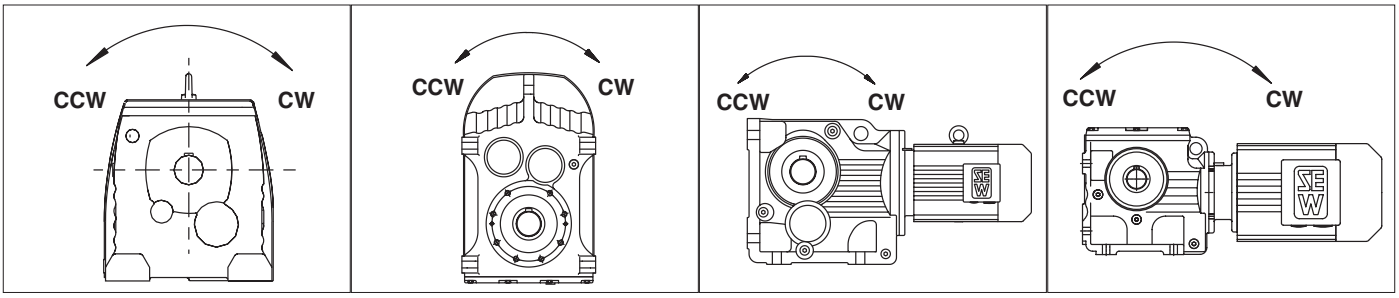

R-Series **F-Series** **K-Series** **S-Series**

آتور صنعت
ATOORSANAT

آتور صنعت ATOORSANAT SEW EURODRIVE

- Position of the VARIGEAR® unit. (The Mounting Position pages show “Normal”).

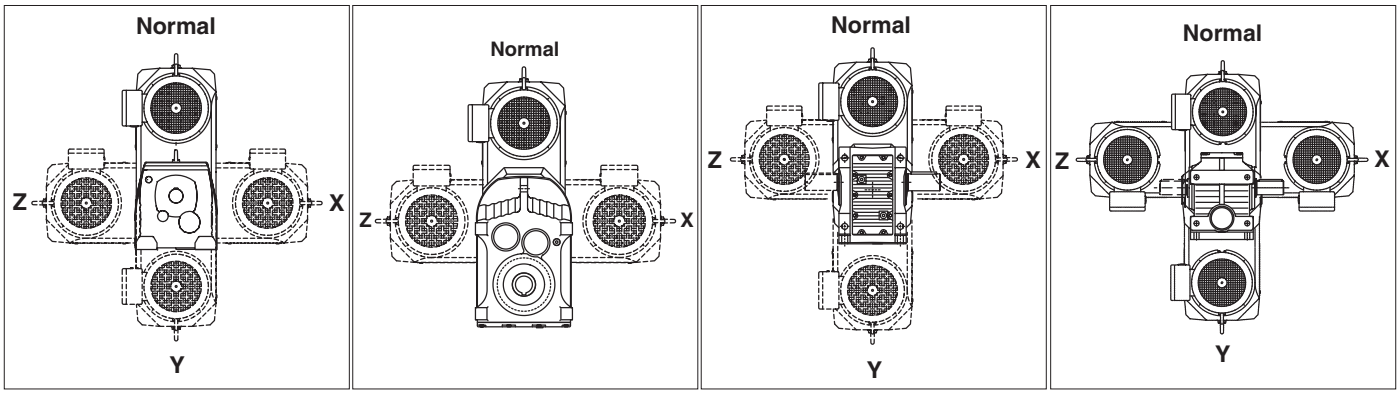

R-Series **F-Series** **K-Series** **S-Series**

Unless otherwise specified the drive will be supplied with the following:

- Mounting Position
  R-Series - M1
  F-Series - M1
  K-Series - M1 or M5
  S-Series - M1 or M5
- Position of the motor conduit box - 0°
- Cable Entry - “x”
- VARIGEAR® Position - normal
- Output shaft and flange projection **MUST** be specified

The mounting positions illustrations show the following (when applicable):

Mounting Surface

Mounting Surface of the Torque Arm

Breather Plug

Oil Level Plug

Drain Plug

With certain mounting positions the first gear reduction stage is completely immersed in oil. On the larger gear unit sizes and with high peripheral speeds of the input stage (low reduction ratios) churning losses constitute a factor which must be taken into account. Please contact our engineering department on this issue.

Additionally the mounting positions M2 and M6 where the high speed input shaft seals are completely immersed in oil are acceptable though generally not preferred. Avoiding these positions provides additional security against oil leakage as the high speed input shaft seals wear.

آتور صنعت ATOORSANAT

2. VARIGEAR® VU Configuration - R-Series

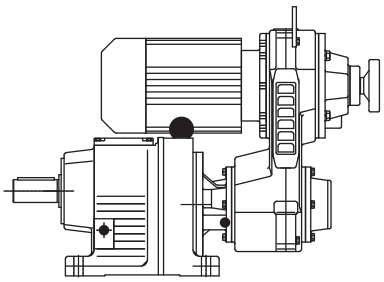

Valid Mounting Positions
M1, M2, M3, M4, M5, M6

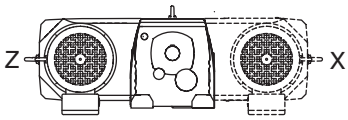

Valid Mounting Positions
M1, M2, M3, M4, M5, M6

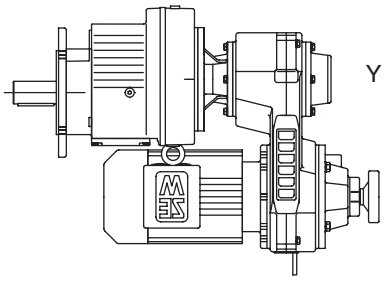

Valid Mounting Positions
M1, M2, M4

Gear Unit	VU							VU							VU						
	01	11	21	31	41	51	6	01	11	21	31	41	51	6	01	11	21	31	41	51	6
R27	1							9													
R37	1	9						1	4												
R47	1	1	9					1	1	9											
R57	1	1	9	9				1	1	9	9										
R67	1	1	9	9				2	9	9	9										
R77		1	1	9	9				1	9	9	9									
R87			1	1	9	9					9	9	9								
R97				1	1	1					1	9	9								
R107					1	1	9					9	1	1							
R137						1	1						1	1							
R147						1	1						1	1							
R167							1							1							
RF27	1							1							1						
RF37	1	1						1	1						1	1					
RF47	1	1	1					1	1	1					1	1	1				
RF57	1	1	1	6				1	1	1	6					1	1	6			
RF67	1	1	1	1				2	1	1	1				2	1	1	1			
RF77		1	1	1	1				1	1	1	1				1	1	1	1		
RF87			1	1	1	1					1	1	1				1	1	1		
RF97				1	1	1					1	1	1					1	1		
RF107					1	1	1					1	1	1				1	1	1	
RF137						1	1						1	1						1	
RF147						1	1						1	1						1	
RF167							1													1	
RX57	1	1	1					1	1	1											
RX67	1	1	1					1	1	1											
RX77		1	1	1					1	1	1										
RX87			1	1	1					1	1	1									
RX97				1	1	1					1	1	1								
RX107					1	1						1	1								
RXF57	1	1	1					1	1	1						1					
RXF67	1	1	1						1	1						4	1				
RXF77		1	1	1					1	1	1					4	1				
RXF87			1	1	1						1	1						1	1		
RXF97				1	1	1					1	1	1					1	1		
RXF107					1	1						1	9	9					1		

1 - Possible Combination
2 - Possible with DT63
4 - Possible with DT80
6 - Possible with DV112
7 - Possible with DV132M
8 - Possible with DV160L
9 - Gear unit has to be mounted on shims

آتور صنعت ATOORSANAT

آتور صنعت ATOORSANAT SEW EURODRIVE

3. VARIGEAR® VZ Configuration - R-Series

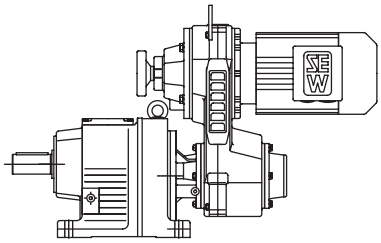

Valid Mounting Positions
M1, M2, M3, M4, M5, M6

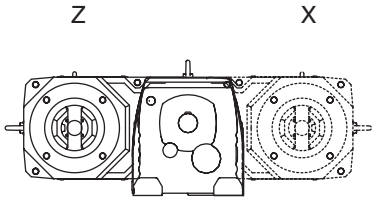

Valid Mounting Positions
M1, M2, M3, M4, M5, M6

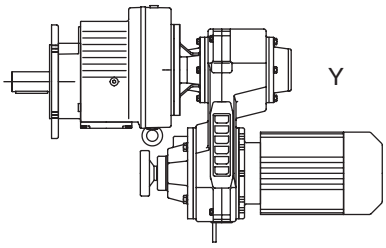

Valid Mounting Positions
M1, M2, M4

Gear Unit	VZ					VZ					VZ				
	01	11	21	31	41	01	11	21	31	41	01	11	20	31	41
R27	1					3									
R37	1	3				1	3								
R47	1	1	3			1	1	3							
R57	1	1	3	3		1	1	3	3						
R67	1	1	3	3		1	3	3	3						
R77		1	1	3	3		1	3	3	3					
R87			1	1	3			1	3	3					
R97				1	1				1	3					
R107					1					3					
RF27	1					1					1				
RF37	1	1				1	1				1	1			
RF47	1	1	1			1	1	1			2	1	1		
RF57	1	1	1	1		1	1	1	1		2	1	1	1	
RF67	1	1	1	1		1	1	1	1		2	1	1	1	
RF77		1	1	1	1		1	1	1	1		1	1	1	1
RF87			1	1	1			1	1	1			2	1	1
RF97				1	1				1	1				2	1
RF107					1					1					2
RX57	1	1	1			1	1	1							
RX67	1	1	1			1	1	1							
RX77		1	1	1			1	1	1						
RX87			1	1	1			1	1	1					
RX97				1	1				1	3					
RX107					1					1					
RXF57	1	1	1			1	1	1			2	1	1		
RXF67	1	1	1			1	1	1			2	1	1		
RXF77		1	1	1			1	1	1			1	1	1	
RXF87			1	1	1			1	1	1				1	1
RXF97				1	1				1	1				2	1
RXF107					1					1					2

1 - Possible Combination
2 - This combination is only possible with a right angled control (e.g. NV, H, HS, EF)
3 - Gear unit has to be mounted on shims

آتور صنعت ATOORSANAT

4.VARIGEAR® VU Configuration - R-Series

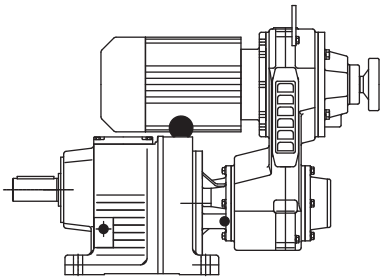

Valid Mounting Positions
M1, M2, M3, M4, M5, M6

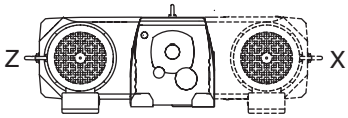

Valid Mounting Positions
M1, M2, M3, M4, M5, M6

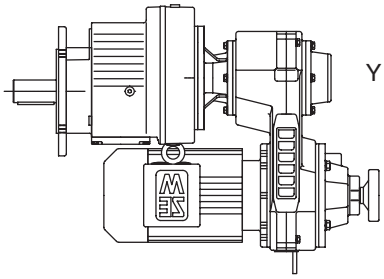

Valid Mounting Positions
M1, M2, M4

Gear Unit	VU							VU							VU						
	01	11	21	31	41	51	6	01	11	21	31	41	51	6	01	11	21	31	41	51	6
R47R37	1	1						1	1												
R57R37	1	1						1	1												
R67R37	1	1						1	1												
R77R37	1	1						1	1												
R87R57	1	1	1	1				1	1	1	1										
R97R57	1	1	1	1				1	1	1	1										
R107R77		1	1	6	1				1	1	6	1									
R137R77		1	1	6	1				1	1	6	1									
R147R77		1	1	6	7				1	1	6	7									
R147R87			1	1	1	1					1	7	1								
R167R97				1	1	1					1	1	8								
R167R107					1	1	1					1	1	1							
RF47R37	1	1						1	1							1	1				
RF57R37	1	1						1	1							1	1				
RF67R37	1	1						1	1							1	1				
RF77R37	1	1						1	1							1	1				
RF87R57	1	1	1	1				1	1	1	1						1	1	1		
RF97R57	1	1	1	1				1	1	1	1						1	1			
RF107R77		1	1	6	1				1	1	6	1					1	1	6	1	
RF137R77		1	1	6	1				1	1	6	1					1	1	6	7	
RF147R77		1	1	6	7				1	1	6	7					1	1	6	7	
RF147R87			1	1	1	1					1	7	1						1	7	
RF167R97					1	1					1	1	8							1	8
RF167R107					1	1	1					1	1	1						1	1

1 - Possible Combination
2 - Possible with DT63
4 - Possible with DT80
6 - Possible with DV112
7 - Possible with DV132M
8 - Possible with DV160L
9 - Gear unit has to be mounted on shims

آتور صنعت TOORSANAT

آتور صنعت ATOORSANAT SEW EURODRIVE

5.VARIGEAR® VZ Configuration - R-Series

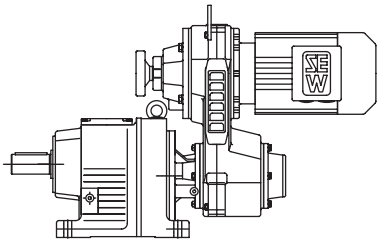

Valid Mounting Positions
M1, M2, M3, M4, M5, M6

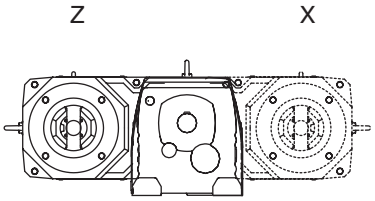

Valid Mounting Positions
M1, M2, M3, M4, M5, M6

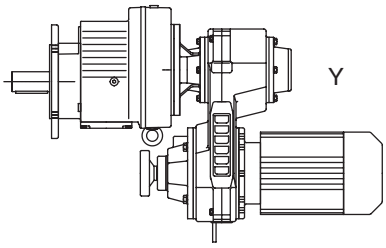

Valid Mounting Positions
M1, M2, M4

Gear Unit	VZ					VZ					VZ				
	01	11	21	31	41	01	11	21	31	41	01	11	20	31	41
R47R37	1	1				1	1								
R57R37	1	1				1	1								
R67R37	1	1				1	1								
R77R37	1	1				1	1								
R87R57	1	1	1	1		1	1	1	1						
R97R57	1	1	1	1		1	1	1	1						
R107R77		1	1	1	1		1	1	1	1					
R137R77		1	1	1	1		1	1	1	1					
R147R77		1	1	1	1		1	1	1	1					
R147R87			1	1	1			1	1	1					
R167R97				1	1				1	1					
R167R107					1					1					
RF47R37	1	1				1	1				1	1			
RF57R37	1	1				1	1				1	1			
RF67R37	1	1				1	1				1	1			
RF77R37	1	1				1	1				1	1			
RF87R57	1	1	1	1		1	1	1	1		1	1	1	1	
RF97R57	1	1	1	1		1	1	1	1		1	1	1	1	
RF107R77		1	1	1	1		1	1	1	1		1	1	1	1
RF137R77		1	1	1	1		1	1	1	1		1	1	1	1
RF147R77		1	1	1	1		1	1	1	1		1	1	1	1
RF147R87			1	1	1			1	1	1			2	1	1
RF167R97				1	1				1	1				2	1
RF167R107					1					1					2

1 - Possible Combination
2 - This combination is only possible with a right angled control (e.g. NV, H, HS, EF)
3 - Gear unit has to be mounted on shims

آتور صنعت ATOORSANAT

6. VARIGEAR® VU Configuration - F-Series

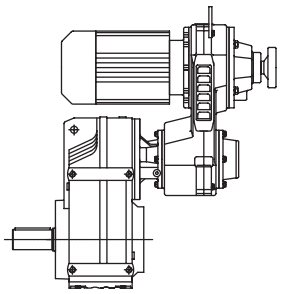

Valid Mounting Positions
M1, M2, M3, M4, M5, M6

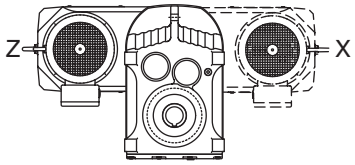

Valid Mounting Positions
M1, M2, M3, M4, M5, M6

Gear Unit	VU							VU						
	01	11	21	31	41	51	6	01	11	21	31	41	51	6
F37	1	3						1	3					
F47	1	3						1	3					
F57	1	1	3	3				1	1	3	3			
F67	1	1	3	3				1	1	3	3			
F77		1	1	3	3				2	1	3	3		
F87			1	1	3	3					1	3	3	
F97				1	1	3						1	1	
F107					1	1	3					1	1	3
F127						1	1						1	1
F157						1	1							1
FA37	1	1						1	1					
FA47	1	1						1	1					
FA57	1	1	1	1				1	1	1	1			
FA67	1	1	1	1				1	1	1	1			
FA77		1	1	1	1				2	1	1	1		
FA87			1	1	1	1					1	1	1	
FA97				1	1	1						1	1	
FA107					1	1	1					1	1	1
FA127						1	1						1	1
FA157						1	1							1
FF37	1	1						1	1					
FF47	1	1						1	1					
FF57	1	1	1	1				1	1	1	1			
FF67	1	1	1	1				1	1	1	1			
FF77		1	1	1	1				2	1	1	1		
FF87			1	1	1	1					1	1	1	
FF97				1	1	1						1	1	
FF107					1	1	1					1	1	1
FF127						1	1						1	1
FF157						1	1							1

1 - Possible Combination
2 - Combination possible with DT80
3 - Gear unit has to be mounted on shims

آتور صنعت ATOORSANAT

آتور صنعت ATOORSANAT SEW EURODRIVE

7.VARIGEAR® VZ Configuration - F-Series

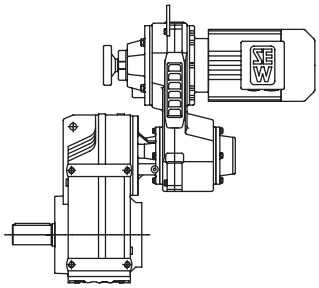

Valid Mounting Positions
M1, M2, M3, M4, M5, M6

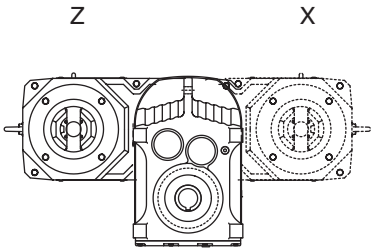

Valid Mounting Positions
M1, M2, M3, M4, M5, M6

Gear Unit	VZ					VZ				
	01	11	21	31	41	01	11	21	31	41
F37	1	2				1	2			
F47	1	2				1	2			
F57	1	1	2	2		1	1	2	2	
F67	1	1	2	2		1	1	2	2	
F77		1	1	2	2		1	1	2	2
F87				1	1				1	
F97				1	1					1
F107					1					1
FA37	1	1				1	1			
FA47	1	1				1	1			
FA57	1	1	1	1		1	1	1	1	
FA67	1	1	1	1		1	1	1	1	
FA77		1	1	1	1		1	1	1	1
FA87				1	1				1	
FA97				1	1					1
FA107					1					1
FF37	1	1				1	1			
FF47	1	1				1	1			
FF57	1	1	1	1		1	1	1	1	
FF67	1	1	1	1		1	1	1	1	
FF77		1	1	1	1		1	1	1	1
FF87				1	1				1	
FF97				1	1					1
FF107					1					1

1 - Possible Combination
2 - Gear unit has to be mounted on shims

آتور صنعت ATOORSANAT

8. VARIGEAR® VU Configuration - K-Series

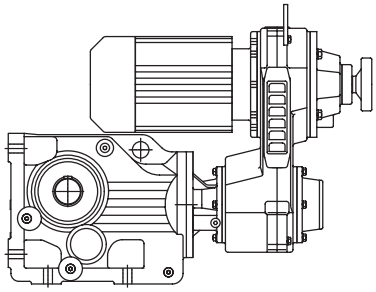

Valid Mounting Positions
M1, M2, M3, M4, M5, M6

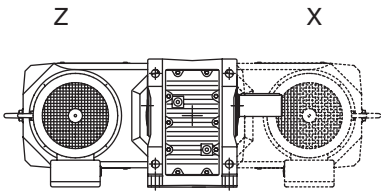

Valid Mounting Positions
M1, M2, M3, M4, M5, M6

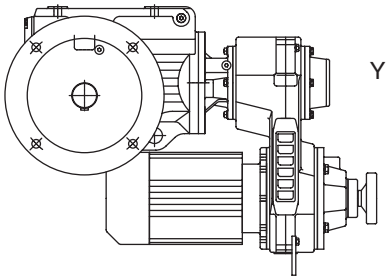

Valid Mounting Positions
M1, M2, M4

Gear Unit	VU							VU							VU						
	01	11	21	31	41	51	6	01	11	21	31	41	51	6	01	11	21	31	41	51	6
K37	1	1						1	3												
K47	1	1	3					1	1	3											
K57	1	1	1	3				1	1	1	3										
K67	1	1	1	3				1	1	1	3										
K77		2	1	1	3				1	1	1	3									
K87				1	1	3				1	1	1	3								
K97				1	1	1					1	1	1								
K107					1	1	1					1	1	1							
K127						1	1						1	1							
K157							1							1							
K167							1							1							
K187							1							1							
KA37	1	1						1	1						4	4					
KA47	1	1	1					1	1	1					4	4	4				
KA57	1	1	1	1				1	1	1	1					4	4	4			
KA67	1	1	1	1				1	1	1	1					4	4	4			
KA77		2	1	1	1				1	1	1	1						4	4		
KA87				1	1	1				1	1	1	1					4	4	4	
KA97				1	1	1					1	1	1						4	4	
KA107					1	1	1					1	1	1						4	4
KA127						1	1						1	1							4
KA157							1							1							
KF37	1	1						1	1						1	1					
KF47	1	1	1					1	1	1					1	1	1				
KF57	1	1	1	1				1	1	1	1					1	1	1			
KF67	1	1	1	1				1	1	1	1					1	1	1			
KF77		2	1	1	1				1	1	1	1						1	1		
KF87				1	1	1				1	1	1	1					1	1	1	
KF97				1	1	1					1	1	1						1	1	
KF107					1	1	1					1	1	1						1	1
KF127						1	1						1	1							1
KF157							1							1							
KH167							1							1							

1 - Possible Combination
2 - Possible with DT80
3 - Gear unit has to be mounted on shims
4 - Please contact SEW-Eurodrive regarding instructions for mounting torque arms.

آتور صنعت ATOORSANAT SEW EURODRIVE

9. VARIGEAR® VZ Configuration - K-Series

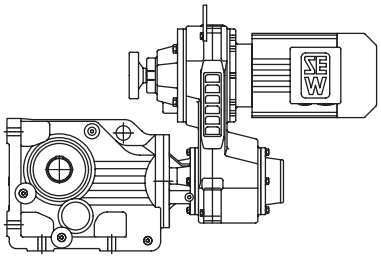

Valid Mounting Positions
M1, M2, M3, M4, M5, M6

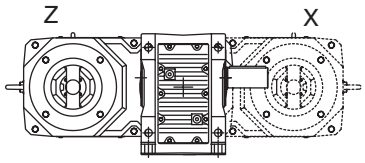

Valid Mounting Positions
M1, M2, M3, M4, M5, M6

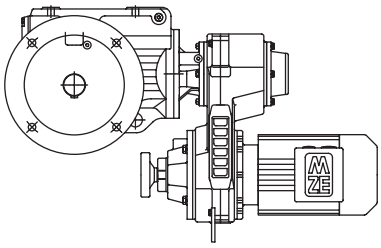

Valid Mounting Positions
M1, M2, M4

Gear Unit	VZ					VZ					VZ				
	01	11	21	31	41	01	11	21	31	41	01	11	20	31	41
K37	1	1				1	1								
K47	1	1	3			1	1	1							
K57	1	1	1	3		1	1	1	3						
K67	1	1	1	3		1	1	1	3						
K77		1	1	1	3		1	1	1	3					
K87			1	1	1			1	1	1			3		
K97				1	1				1	1					
K107					1					1					
KA37	1	1				1	1				4	4			
KA47	1	1	1			1	1	1			4	4	4		
KA57	1	1	1	1		1	1	1	1			4	4	4	
KA67	1	1	1	1		1	1	1	1			4	4	4	
KA77		1	1	1	1		1	1	1	1		2/4	4	4	4
KA87			1	1	1			1	1	1			2/4	4	4
KA97				1	1				1	1				2/4	4
KA107					1					1					4
KF37	1	1				1	1				1	1			
KF47	1	1	1			1	1	1			1	1	1		
KF57	1	1	1	1		1	1	1	1		2	1	1	1	
KF67	1	1	1	1		1	1	1	1		2	1	1	1	
KF77		1	1	1	1		1	1	1	1		1	1	1	1
KF87			1	1	1			1	1	1			2	1	1
KF97				1	1				1	1				2	1
KF107					1					1					2

1 - Possible Combination
2 - This combination is only possible with a right angled control (e.g. NV, H, HS, EF)
3 - Gear unit has to be mounted on shims
4 - Please contact SEW-Eurodrive regarding instructions for mounting torque arms.

آتور صنعت ATOORSANAT

10. VARIGEAR® VU Configuration - S-Series

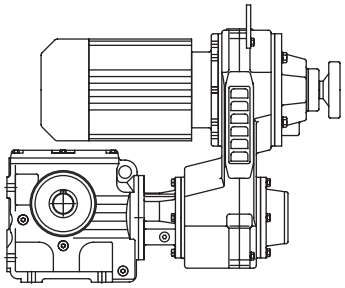

Valid Mounting Positions
M1, M2, M3, M4, M5, M6

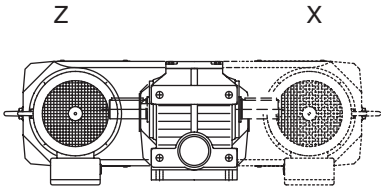

Valid Mounting Positions
M1, M2, M3, M4, M5, M6

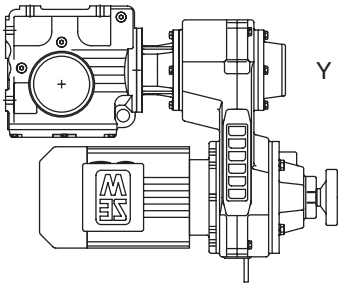

Valid Mounting Positions
M1, M2, M4

Gear Unit	VU						VU						VU					
	01	11	21	31	41	51	01	11	21	31	41	51	01	11	21	31	41	51
S37	1						2						1					
S47	1	1					2	2					1	1				
S57	1	1					2	2					1	1				
S67		1	1	2			2	2	2	2				1	1	1		
S77		3		1	2			2	2	2	2			3		1	1	
S87				1	1	2			1	1	2	2						
S97					1	1				1	2	2					1	1
SA37	1						1						1					
SA47	1	1					1	1					1	1				
SA57	1	1					1	1					1	1				
SA67		1	1	1			1	1	1	1				1	1	1		
SA77		3		1	1			1	1	1	1			3		1	1	
SA87				1	1	1				1	1	1				1	1	1
SA97					1	1				1	1	1					1	1
SF37	1						1						1					
SF47	1	1					1	1					1	1				
SF57	1	1					1	1					1	1				
SF67		1	1	1			1	1	1	1				1	1	1		
SF77		3		1	1			1	1	1	1			3		1	1	
SF87				1	1	1				1	1	1				1	1	1
SF97					1	1				1	1	1					1	1

1 - Possible Combination
2 - This combination is only possible with a right angled control (e.g. NV, H, HS, EF)
3 - Gear unit has to be mounted on shims

آتور صنعت ATOORSANAT

آتور صنعت ATOORSANAT SEW EURODRIVE

11.VARIGEAR® VZ Configuration - S-Series

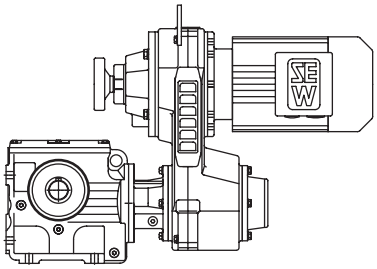

Valid Mounting Positions
M1, M2, M3, M4, M5, M6

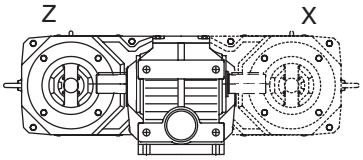

Valid Mounting Positions
M1, M2, M3, M4, M5, M6

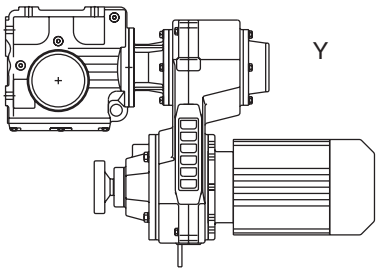

Valid Mounting Positions
M1, M2, M4

Gear Unit	VZ					VZ					VZ				
	01	11	21	31	41	01	11	21	31	41	01	11	20	31	41
S37	1					1					1				
S47	1	1				1	1				1	1			
S57	1	1				1	1				1	1			
S67	1	1	1	2		1	1	1	1			1	1	1	
S77		1	1	1	2		1	1	1	1		1	1	1	1
S87			1	1	2			1	1	1				1	1
S97				1	1				1	1					1
SA37	1					1					1				
SA47	1	1				1	1				1	1			
SA57	1	1				1	1				1	1			
SA67	1	1	1	1		1	1	1	1			1	1	1	
SA77		1	1	1	1		1	1	1	1		1	1	1	1
SA87			1	1	1			1	1	1				1	1
SA97				1	1				1	1					1
SF37	1					1					1				
SF47	1	1				1	1				1	1			
SF57	1	1				1	1				1	1			
SF67	1	1	1	1		1	1	1	1			1	1	1	
SF77		1	1	1	1		1	1	1	1		1	1	1	1
SF87			1	1	1			1	1	1				1	1
SF97				1	1				1	1					1

1 - Possible Combination
2 - Gear unit has to be mounted on shims

آتور صنعت ATOORSANAT

Notes

آتور صنعت
ATOORSANAT

آتور صنعت ATOORSANAT SEW EURODRIVE

Technical Data

1. Lubrication

Each gear unit is supplied from the factory with the correct grade and quantity of lubricant for the specified mounting position. The following lubricants are supplied from our North American Facilities. Under special circumstances such as high or low ambient temperatures optional oils should be used.

1.1. Standard Oil

USA - Standard Oil			
Gear Units	**Type**	**Ambient Temperature °C**	**Manufacturer**
R/RF27 - R/RF167	Mobilgear 630 (M)	0 to +40	Mobil Oil Corp.
F..37 - F..157			
K..37 - K..157 K/KH167 - K/KH187			
S..37 - S..97	Mobilgear 636 (M)		

Canada - Standard Oil			
Gear Units	**Type**	**Ambient Temperature °C**	**Manufacturer**
R/RF27 - R/RF167	Omala 220(M)	0 to +40	Shell Oil Co.
F..37 - F..157			
K..37 - K..157 K/KH167 - K/KH187			
S..47 - S..97	Omala 680 (M)		
S..37 - S..97	Tribol 800/680 (S)	0 to +60	Tribol

1.2. Optional Oil

USA - Optional Oil			
Gear Units	**Type**	**Ambient Temperature °C**	**Manufacturer**
R/RF27 - R/RF167	Mobilgear 629 (M)	-15 to +25	Mobil Oil Corp.
F..37 - F..157	Mobil SHC630 (S)	-40 to +40	
K..37 - K..157 K/KH167 - K/KH187	Mobil SHC629 (S)	-30 to +50	
S..47 - S..97	Mobilgear 630 (M)	-15 to +25	
S..37 - S..97	Mobil SHC634 (S)	-25 to +60	

Canada - Optional Oil			
Gear Units	**Type**	**Ambient Temp. - °C**	**Manufacturer**
R/RF27 - R/RF167	Omala RL220(S)	-30 to +80	Shell Oil Co.
F..37 - F..157			
K..37 - K..157 K/KH167 - K/KH187			
S..47 - S..97	Omala 200 (M)	-15 to +25	
S..37 - S..97	Tivela SC460 (S)	-25 to +10	

(M) - Mineral Oil
(S) - Synthetic Oil

آتور صنعت ATOORSANAT

1.3. Mineral Grease

For ball and roller bearings used in the gear units the following greases are recommended.

Type	Manufacturer	Ambient Temperature °C
Mobilux EP2	Mobil Oil Corp.	-20 to +40
Alvania Grease R3	Shell Oil Co.	-30 to +60

1.4. Synthetic Grease

Type	Manufacturer	Ambient Temperature °C
Mobiltemp SHC 32	Mobil Oil Corp.	-45 to +60

The approximate lubricant in US **gallons and liters** per mounting position is as follows:

Gear Unit	Mounting Position											
	M1 [1]		M2 [1]		M3 [1]		M4		M5		M6	
	Gallons	Liters	Gallons	Liters	Gallons	Liters	Gallons	Liters	Gallons	Liters	Gallons	Liters
RX57	0.16	0.6	0.21	0.8	0.34	1.3	0.34	1.3	0.24	0.9	0.24	0.9
RX67	0.21	0.8	0.21	0.8	0.45	1.7	0.50	1.9	0.29	1.1	0.29	1.1
RX77	0.29	1.1	0.40	1.5	0.69	2.6	0.71	2.7	0.42	1.6	0.42	1.6
RX87	0.45	1.7	0.66	2.5	1.27	4.8	1.27	4.8	0.77	2.9	0.77	2.9
RX97	0.55	2.1	0.90	3.4	1.96	7.4	1.85	7	1.27	4.8	1.27	4.8
RX107	1.03	3.9	1.48	5.6	3.06	11.6	3.14	11.9	2.03	7.7	2.03	7.7
RXF57	0.13	0.5	0.21	0.8	0.29	1.1	0.29	1.1	0.18	0.7	0.18	0.7
RXF67	0.18	0.7	0.21	0.8	0.40	1.5	0.45	1.7	0.26	1	0.26	1
RXF77	0.24	0.9	0.40	1.5	0.63	2.4	0.66	2.5	0.42	1.6	0.42	1.6
RXF87	0.42	1.6	0.66	2.5	1.29	4.9	1.24	4.7	0.77	2.9	0.77	2.9
RXF97	0.55	2.1	0.95	3.6	1.88	7.1	1.85	7	1.27	4.8	1.27	4.8
RXF107	0.82	3.1	1.56	5.9	2.96	11.2	2.77	10.5	1.90	7.2	1.90	7.2
R17/R17F	0.07	0.25	0.16	0.6	0.09	0.35	0.16	0.6	0.09	0.35	0.09	0.35
R27/R27F	0.07 (0.11)	0.25 (0.4)	0.18	0.7	0.11	0.4	0.18	0.7	0.11	0.4	0.11	0.4
R37/R37F	0.08 (0.26)	0.3 (1)	0.24	0.9	0.26	1	0.29	1.1	0.21	0.8	0.26	1
R47/R47F	0.18 (0.40)	0.7 (1.5)	0.42	1.6	0.40	1.5	0.45	1.7	0.40	1.5	0.40	1.5
R57/R57F	0.21 (0.45)	0.8 (1.7)	0.50	1.9	0.45	1.7	0.55	2.1	0.45	1.7	0.45	1.7
R67/R67F	0.29 (0.61)	1.1 (2.3)	0.69 (0.92)	2.6 (3.5)	0.74	2.8	0.85	3.2	0.48	1.8	0.53	2
R77/R77F	0.32 (0.79)	1.2 (3)	1.00 (1.14)	3.8 (4.3)	0.95	3.6	1.14	4.3	0.66	2.5	0.90	3.4
R87/R87F	0.61 (1.59)	2.3 (6)	1.77 (2.22)	6.7 (8.4)	1.90	7.2	2.03	7.7	1.66	6.3	1.72	6.5
R97	1.22 (2.59)	4.6 (9.8)	3.09 (3.70)	11.7 (14)	3.09	11.7	3.54	13.4	2.99	11.3	3.09	11.7
R107	1.59 (3.62)	6 (13.7)	4.31	16.3	4.46	16.9	5.07	19.2	3.49	13.2	4.20	15.9
R137	2.64 (6.61)	10 (25)	7.40	28	7.79	29.5	8.32	31.5	6.61	25	6.61	25
R147	4.07 (10.57)	15.4 (40)	12.29	46.5	12.68	48	13.74	52	10.44	39.5	10.83	41
R167	7.13 (18.49)	27 (70)	21.66	82	20.61	78	23.25	88	17.44	66	18.23	69

[1] **On compound gear units the primary (larger) gear unit is provided with the oil quantity in parenthesis.**

آتور صنعت ATOORSANAT SEW EURODRIVE

Gear Unit	Mounting Position											
	M1 [1]		M2 [1]		M3 [1]		M4		M5		M6	
	Gallons	Liters	Gallons	Liters	Gallons	Liters	Gallons	Liters	Gallons	Liters	Gallons	Liters
RF17	0.07	0.25	0.16	0.6	0.09	0.35	0.16	0.6	0.09	0.35	0.09	0.35
RF27	0.07 (0.11)	0.25 (0.4)	0.18	0.7	0.11	0.4	0.18	0.7	0.11	0.4	0.11	0.4
RF37	0.11 (0.26)	0.4 (1)	0.24	0.9	0.26	1	0.29	1.1	0.21	0.8	0.26	1
RF47	0.18 (0.40)	0.7 (1.5)	0.42	1.6	0.40	1.5	0.45	1.7	0.40	1.5	0.40	1.5
RF/RM57	0.21 (0.45)	0.8 (1.7)	0.48	1.8	0.45	1.7	0.53	2	0.45	1.7	0.45	1.7
RF/RM67	0.32 (0.66)	1.2 (2.5)	0.71 (0.95)	2.7 (3.6)	0.71	2.7	0.82	3.1	0.50	1.9	0.55	2.1
RF/RM77	0.32 (0.69)	1.2 (2.6)	1.00 (1.08)	3.8 (4.1)	0.87	3.3	1.08	4.1	0.63	2.4	0.79	3
RF/RM87	0.63 (1.59)	2.4 (6)	1.8 (2.09)	6.8 (7.9)	1.88	7.1	2.03	7.7	1.66	6.3	1.69	6.4
RF/RM97	1.35 (2.69)	5.1 (10.2)	3.14 (3.70)	11.9 (14)	2.96	11.2	3.70	14	2.96	11.2	3.12	11.8
RF/RM107	1.66 (3.94)	6.3 (14.9)	4.20	15.9	4.49	17	5.07	19.2	3.46	13.1	4.20	15.9
RF/RM137	2.51 (6.61)	9.5 (25)	7.13	27	7.66	29	8.59	32.5	6.61	25	6.61	25
RF/RM147	4.33 (11.10)	16.4 (42)	12.42	47	12.68	48	13.74	52	11.10	42	11.10	42
RF/RM167	6.87 (18.49)	26 (70)	21.66	82	20.61	78	23.25	88	17.17	65	18.76	71
F37	0.26	1	0.32	1.2	0.18	0.7	0.32	1.2	0.26	1	0.29	1.1
F47	0.40	1.5	0.48	1.8	0.29	1.1	0.50	1.9	0.40	1.5	0.45	1.7
F57	0.69	2.6	0.98	3.7	0.55	2.1	0.92	3.5	0.74	2.8	0.77	2.9
F67	0.71	2.7	1.00	3.8	0.50	1.9	1.00	3.8	0.77	2.9	0.85	3.2
F77	1.32	5	1.93	7.3	1.14	4.3	2.11	8	1.59	6	1.66	6.3
F87	2.64	10	3.43	13	2.03	7.7	3.65	13.8	2.85	10.8	2.91	11
F97	4.89	18.5	5.94	22.5	3.33	12.6	6.66	25.2	4.89	18.5	5.28	20
F107	6.47	24.5	8.45	32	5.15	19.5	9.91	37.5	7.13	27	7.13	27
F127	10.70	40.5	14.53	55	8.98	34	16.12	61	12.29	46.5	12.42	47
F157	18.23	69	27.48	104	16.64	63	27.74	105	22.72	86	20.61	78
FF37	0.26	1	0.32	1.2	0.18	0.7	0.34	1.3	0.26	1	0.29	1.1
FF47	0.42	1.6	0.50	1.9	0.29	1.1	0.50	1.9	0.40	1.5	0.45	1.7
FF57	0.74	2.8	1.00	3.8	0.55	2.1	0.98	3.7	0.77	2.9	0.79	3
FF67	0.71	2.7	1.00	3.8	0.50	1.9	1.00	3.8	0.77	2.9	0.85	3.2
FF77	1.35	5.1	1.93	7.3	1.14	4.3	2.14	8.1	1.59	6	1.66	6.3
FF87	2.72	10.3	3.49	13.2	2.06	7.8	3.73	14.1	2.91	11	2.96	11.2
FF97	5.02	19	5.94	22.5	3.33	12.6	6.74	25.5	4.99	18.9	5.42	20.5
FF107	6.74	25.5	8.45	32	5.15	19.5	10.17	38.5	7.27	27.5	7.40	28
FF127	10.96	41.5	14.80	56	8.98	34	16.64	63	12.29	46.5	12.95	49
FF157	19.02	72	27.74	105	16.91	64	28.01	106	22.99	87	20.87	79
FA../FH../FV..37	0.26	1	0.32	1.2	0.18	0.7	0.32	1.2	0.26	1	0.29	1.1
FA../FH../FV..47	0.40	1.5	0.48	1.8	0.29	1.1	0.50	1.9	0.40	1.5	0.45	1.7
FA../FH../FV..57	0.71	2.7	1.00	3.8	0.55	2.1	0.95	3.6	0.77	2.9	0.79	3
FA../FH../FV..67	0.71	2.7	1.00	3.8	0.50	1.9	1.00	3.8	0.77	2.9	0.85	3.2
FA../FH../FV..77	1.32	5	1.93	7.3	1.14	4.3	2.11	8	1.59	6	1.66	6.3
FA../FH../FV..87	2.64	10	3.43	13	2.03	7.7	3.65	13.8	2.85	10.8	2.91	11
FA../FH../FV..97	4.89	18.5	5.94	22.5	3.33	12.6	6.61	25	4.89	18.5	5.28	20
FA../FH../FV..107	6.47	24.5	8.45	32	5.15	19.5	9.91	37.5	7.13	27	7.13	27
FA../FH../FV..127	10.30	39	14.53	55	8.98	34	16.12	61	11.89	45	12.29	46.5
FA../FH../FV..157	17.97	68	27.21	103	16.38	62	27.48	104	22.46	85	20.34	77

Gear Unit	Mounting Position											
	M1 [1]		M2 [1]		M3 [1]		M4		M5		M6	
	Gallons	Liters	Gallons	Liters	Gallons	Liters	Gallons	Liters	Gallons	Liters	Gallons	Liters
K37	0.13	0.5	0.26	1	0.26	1	0.34	1.3	0.26	1	0.26	1
K47	0.21	0.8	0.34	1.3	0.40	1.5	0.53	2	0.42	1.6	0.42	1.6
K57	0.32	1.2	0.61	2.3	0.66	2.5	0.79	3	0.69	2.6	0.63	2.4
K67	0.29	1.1	0.63	2.4	0.69	2.6	0.90	3.4	0.69	2.6	0.69	2.6
K77	0.58	2.2	1.08	4.1	1.16	4.4	1.56	5.9	1.11	4.2	1.16	4.4
K87	0.98	3.7	2.11	8	2.30	8.7	2.88	10.9	2.06	7.8	2.11	8
K97	1.85	7	3.70	14	4.15	15.7	5.28	20	4.15	15.7	4.10	15.5
K107	2.64	10	5.55	21	6.74	25.5	8.85	33.5	6.34	24	6.34	24
K127	5.55	21	10.96	41.5	11.62	44	14.27	54	10.57	40	10.83	41
K157	8.19	31	16.38	62	17.17	65	23.78	90	15.32	58	16.38	62
K/KH167	9.25	35	26.42	100	26.42	100	33.03	125	22.46	85	22.46	85
K/KH187	15.85	60	44.91	170	44.91	170	54.16	205	34.35	130	34.35	130
KF37	0.13	0.5	0.29	1.1	0.29	1.1	0.40	1.5	0.26	1	0.26	1
KF47	0.21	0.8	0.34	1.3	0.45	1.7	0.58	2.2	0.42	1.6	0.42	1.6
KF57	0.34	1.3	0.61	2.3	0.71	2.7	0.79	3	0.77	2.9	0.71	2.7
KF67	0.29	1.1	0.63	2.4	0.74	2.8	0.95	3.6	0.71	2.7	0.71	2.7
KF77	0.55	2.1	1.08	4.1	1.16	4.4	1.59	6	1.19	4.5	1.19	4.5
KF87	0.98	3.7	2.17	8.2	2.38	9	3.14	11.9	2.22	8.4	2.22	8.4
KF97	1.85	7	3.88	14.7	4.57	17.3	5.68	21.5	4.15	15.7	4.36	16.5
KF107	2.64	10	5.81	22	6.87	26	9.25	35	6.61	25	6.61	25
KF127	5.55	21	10.96	41.5	12.15	46	14.53	55	10.83	41	10.83	41
KF157	8.19	31	17.44	66	18.23	69	24.31	92	16.38	62	16.38	62
KA../KH../KV..37	0.13	0.5	0.26	1	0.26	1	0.37	1.4	0.26	1	0.26	1
KA../KH../KV..47	0.21	0.8	0.34	1.3	0.42	1.6	0.55	2.1	0.42	1.6	0.42	1.6
KA../KH../KV..57	0.34	1.3	0.61	2.3	0.71	2.7	0.79	3	0.77	2.9	0.71	2.7
KA../KH../KV..67	0.29	1.1	0.63	2.4	0.71	2.7	0.95	3.6	0.69	2.6	0.69	2.6
KA../KH../KV..77	0.55	2.1	1.08	4.1	1.22	4.6	1.59	6	1.16	4.4	1.16	4.4
KA../KH../KV..87	0.98	3.7	2.17	8.2	2.32	8.8	2.93	11.1	2.11	8	2.11	8
KA../KH../KV..97	1.85	7	3.88	14.7	4.15	15.7	5.28	20	4.15	15.7	4.15	15.7
KA../KH../KV..107	2.64	10	5.42	20.5	6.34	24	8.45	32	6.34	24	6.34	24
KA../KH../KV..127	5.55	21	10.96	41.5	11.36	43	13.74	52	10.57	40	10.57	40
KA../KH../KV..157	8.19	31	17.44	66	17.70	67	22.99	87	16.38	62	16.38	62
S37	0.07	0.25	0.11	0.4	0.13	0.5	0.16	0.6	0.11	0.4	0.11	0.4
S47	0.09	0.35	0.21	0.8	0.18 (0.24)	0.7 (0.9)	0.29	1.1	0.21	0.8	0.21	0.8
S57	0.13	0.5	0.32	1.2	0.26 (0.32)	1 (1.2)	0.40	1.5	0.34	1.3	0.34	1.3
S67	0.26	1	0.53	2	0.58 (0.82)	2.2 (3.1)	0.85	3.2	0.69	2.6	0.69	2.6
S77	0.50	1.9	1.11	4.2	0.98 (1.43)	3.7 (5.4)	1.59	6	1.16	4.4	1.16	4.4
S87	0.87	3.3	2.14	8.1	1.82 (2.75)	6.9 (10.4)	3.17	12	2.22	8.4	2.22	8.4
S97	1.80	6.8	3.96	15	3.54 (4.76)	13.4 (18)	5.94	22.5	4.49	17	4.49	17

Gear Unit	Mounting Position											
	M1 [1]		M2 [1]		M3 [1]		M4		M5		M6	
	Gallons	Liters	Gallons	Liters	Gallons	Liters	Gallons	Liters	Gallons	Liters	Gallons	Liters
SF37	0.07	0.25	0.11	0.4	0.13	0.5	0.16	0.6	0.11	0.4	0.11	0.4
SF47	0.11	0.4	0.24	0.9	0.24 (0.29)	0.9 (1.1)	0.32	1.2	0.26	1	0.26	1
SF57	0.13	0.5	0.32	1.2	0.26 (0.40)	1 (1.5)	0.42	1.6	0.37	1.4	0.37	1.4
SF67	0.26	1	0.58	2.2	0.61 (0.79)	2.3 (3)	0.85	3.2	0.71	2.7	0.71	2.7
SF77	0.50	1.9	1.08	4.1	1.03 (1.53)	3.9 (5.8)	1.72	6.5	1.29	4.9	1.29	4.9
SF87	1.00	3.8	2.11	8	1.88 (2.67)	7.1 (10.1)	3.17	12	2.40	9.1	2.40	9.1
SF97	1.96	7.4	3.96	15	3.65 (4.97)	13.8 (18.8)	6.24	23.6	4.76	18	4.76	18
SA../SH..37	0.07	0.25	0.11	0.4	0.13	0.5	0.16	0.6	0.11	0.4	0.11	0.4
SA../SH..47	0.11	0.4	0.21	0.8	0.18 (0.24)	0.7 (0.9)	0.29 0.28 [2]	1.1 1.05 [2]	0.21	0.8	0.21	0.8
SA../SH..57	0.13	0.5	0.29	1.1	0.26 (0.40)	1 (1.5)	0.42	1.6	0.32	1.2	0.32	1.2
SA../SH..67	0.26	1	0.53	2	0.48 (0.69)	1.8 (2.6)	0.77	2.9	0.66	2.5	0.66	2.5
SA../SH..77	0.48	1.8	1.03	3.9	0.95 (1.32)	3.6 (5)	1.56	5.9	1.19	4.5	1.19	4.5
SA../SH..87	1.00	3.8	1.96	7.4	1.59 (2.30)	6 (8.7)	2.96	11.2	2.11	8	2.11	8
SA../SH..97	1.85	7	3.70	14	3.01 (4.23)	11.4 (16)	5.55	21	4.15	15.7	4.15	15.7

[1] **On compound gear units the primary (larger) gear unit is provided with the oil quantity in parenthesis.**
[2] **2-pole motor only.**

For compound drives the secondary reducer requires its own oil filling as shown in the chart below.

Gear Unit	Mounting Position					
	M1/M3/M5/M6		M2		M4	
	Gallons	Liters	Gallons	Liters	Gallons	Liters
R17	0.07	0.25	0.16	0.60	0.16	0.60
R37	0.11	0.40	0.24	0.90	0.29	1.10
R57	0.21	0.80	0.48	1.80	0.53	2.00
R77	0.32	1.20	1.00	3.80	1.08	4.10
R87	0.63	2.40	1.80	6.80	2.03	7.70
R97	1.35	5.10	3.14	11.90	3.70	14.00
R107	1.66	6.30	4.20	15.90	5.07	19.20

ATOORSANAT آتور صنعت

2. Unit Weight - R-Series

Listed weights are for complete units less oil. For flanged units add the flange weight shown in second column to the complete unit weight shown in the chart (a negative value must be subtracted). For units with brakes, add the brake weight listed at the bottom of the chart. All weights are approximate.

Note: All weights listed are in pounds. Oil weighs approximately 7.5 lbs/gallon (2 lb/liter). Reference Lubrication Sheet for volume of oil required.

Model	Add for Flange	VU/VZ 01		VU/VZ 11	VU/VZ 21	VU/VZ 31		
		DT71	DT80	DT90	DT100	DT100	DV112M	DV132S
RX57	2	84	91	139	214	280	305	316
RX67	4	90	132	145	220	—	—	—
RX77	4	—	—	163	238	—	—	—
RX87	13	—	—	—	267	333	358	369
RX97	22	—	—	—	—	374	399	410
RX107	33	—	—	—	—	—	—	—
R27	2	77	84	—	—	—	—	—
R37	2	86	93	141	—	—	—	—
R47	0	97	104	152	227	—	—	—
R47R37	0	119	126	174	—	—	—	—
R57	4	106	120	161	236	302	327	338
R57R37	4	128	135	183	—	—	—	—
R67	3	103	110	158	233	299	324	335
R67R37	3	128	135	183	—	—	—	—
R77	9	—	—	185	260	326	351	362
R77R37	9	154	161	209	—	—	—	—
R87	0	—	—	—	319	385	410	421
R87R57	0	234	241	289	364	430	455	466
R97	-7	—	—	—	—	476	501	512
R97R57	-7	324	331	379	454	520	545	556
R107	-24	—	—	—	—	—	—	—
R107R77	-24	—	—	520	595	661	686	697
R137	-17	—	—	—	—	—	—	—
R137R77	-17	—	—	657	732	798	823	834
R147	-90	—	—	—	—	—	—	—
R147R77	-90	—	—	970	1045	1111	1136	1147
R147R87	-90	—	—	—	1091	1157	1182	1193
R167	-154	—	—	—	—	—	—	—
R167R97	-154	—	—	—	—	1918	1943	1954
R167R107	-154	—	—	—	—	—	—	—
Add for Brake		6.5	6.5	22	22	22	26.5	33
Add for VARIGEAR® Brake		13	13	13	31	36	36	36

آتور صنعت ATOORSANAT

آتور صنعت ATOORSANAT SEW EURODRIVE

Model	Add for Flange	VU/VZ41			VU51			VU 6		
		DV132M	DV132ML	DV160M	DV160L	DV180M	DV180L	DV180L	DV200	DV225
RX57	2	—	—	—	—	—	—	—	—	—
RX67	4	—	—	—	—	—	—	—	—	—
RX77	4	—	—	—	—	—	—	—	—	—
RX87	13	534	556	567	—	—	—	—	—	—
RX97	22	575	597	608	950	1005	1038	—	—	—
RX107	33	624	646	657	999	1054	1087	—	—	—
R27	2	—	—	—	—	—	—	—	—	—
R37	2	—	—	—	—	—	—	—	—	—
R47	0	—	—	—	—	—	—	—	—	—
R47R37	0	—	—	—	—	—	—	—	—	—
R57	4	—	—	—	—	—	—	—	—	—
R57R37	4	—	—	—	—	—	—	—	—	—
R67	3	—	—	—	—	—	—	—	—	—
R67R37	3	—	—	—	—	—	—	—	—	—
R77	9	527	549	560	—	—	—	—	—	—
R77R37	9	—	—	—	—	—	—	—	—	—
R87	0	586	608	619	961	1016	1049	—	—	—
R87R57	0	—	—	—	—	—	—	—	—	—
R97	-7	677	699	710	1052	1107	1140	—	—	—
R97R57	-7	—	—	—	—	—	—	—	—	—
R107	-24	789	811	822	1164	1219	1252	1393	1539	1781
R107R77	-24	862	884	895	—	—	—	—	—	—
R137	-17	—	—	—	1301	1356	1389	1530	1676	1918
R137R77	-17	999	1021	1032	—	—	—	—	—	—
R147	-90	—	—	—	1614	1669	1702	1843	1989	2231
R147R77	-90	1312	1334	1345	—	—	—	—	—	—
R147R87	-90	1358	1380	1391	1733	1788	1821	—	—	—
R167	-154	—	—	—	—	—	—	2516	2662	2904
R167R97	-154	2119	2141	2152	2494	2549	2582	—	—	—
R167R107	-154	2196	2218	2229	2571	2626	2659	2800	2946	3188
Add for Brake		53	55	55	93	90	93	93	112	112
Add for VARIGEAR® Brake		52	52	52	—	—	—	—	—	—

آتور صنعت ATOORSANAT

3. Unit Weight - F-Series

Listed weights are for complete units less oil. For flanged units add the flange weight shown in second column to the complete unit weight shown in the chart (a negative value must be subtracted). For units with brakes, add the brake weight listed at the bottom of the chart. All weights are approximate.

Note: All weights listed are in pounds. Oil weighs approximately 7.5 lbs/gallon (2 lb/liter). Reference Lubrication Sheet for volume of oil required.

Model	Add for			VU/VZ 01		VU/VZ 11	VU/VZ 21	VU/VZ 31		
	FF	FA	FAF	DT71	DT80	DT90	DT100	DT100	DV112	DV132S
F37	7	2	4	92	99	147	—	—	—	—
F47	7	-2	4	106	113	161	—	—	—	—
F57	11	-4	9	119	60	174	249	315	340	351
F57R37	11	-4	9	141	148	196	—	—	—	—
F67	11	-4	4	141	148	196	271	337	362	373
F67R37	11	-4	4	163	170	218	—	—	—	—
F77	18	-11	2	—	—	247	322	388	413	424
F77R37	18	-11	2	214	221	269	—	—	—	—
F87	51	-13	31	—	—	—	399	465	490	501
F87R57	51	-13	31	313	320	368	443	509	534	545
F97	75	-33	18	—	—	—	—	608	633	644
F97R57	75	-33	18	456	463	511	586	652	677	688
F107	57	-31	18	—	—	—	—	—	—	—
F107R77	57	-31	18	—	—	738	813	879	904	915
F127	88	-75	0	—	—	—	—	—	—	—
F127R77	88	-75	0	—	—	979	1054	1120	1145	1156
F127R87	88	-75	0	—	—	—	1100	1166	1191	1202
F157	159	-119	7	—	—	—	—	—	—	—
F157R97	159	-119	7	—	—	—	—	1885	1910	1921
Add for Motor Brake				6.5	6.5	22	22	22	26.5	33
Add for VARIGEAR® Brake				13	13	13	31	36	36	36

آتور صنعت ATOORSANAT

آتور صنعت ATOORSANAT SEW EURODRIVE

Model	Add For			VU/VZ 41			VU 51			VU 6		
	FF	FA	FAF	DV132M	DV132ML	DV160M	DV160L	DV180M	DV180L	DV180L	DV200	DV225
F37	7	2	4	—	—	—	—	—	—	—	—	—
F47	7	-2	4	—	—	—	—	—	—	—	—	—
F57	7	-4	9	—	—	—	—	—	—	—	—	—
F57R37	11	-4	9	—	—	—	—	—	—	—	—	—
F67	11	-4	4	—	—	—	—	—	—	—	—	—
F67R37	11	-4	4	—	—	—	—	—	—	—	—	—
F77	18	-11	2	589	611	622	—	—	—	—	—	—
F77R37	18	-11	2	—	—	—	—	—	—	—	—	—
F87	51	-13	31	666	688	699	1041	1096	1129	—	—	—
F87R57	51	-13	31	—	—	—	—	—	—	—	—	—
F97	75	-33	18	809	831	842	1184	1239	1272	—	—	—
F97R57	75	-33	18	—	—	—	—	—	—	—	—	—
F107	57	-31	18	1008	1030	1041	1383	1438	1471	1612	1758	2000
F107R77	57	-31	18	1080	1102	1113	—	—	—	—	—	—
F127	88	-75	0	—	—	—	1623	1678	1711	1852	1998	2240
F127R77	88	-75	0	1321	1343	1354	—	—	—	—	—	—
F127R87	88	-75	0	1367	1389	1400	1742	1497	1830	—	—	—
F157	159	-119	7	—	—	—	1532	1605	1629	2483	2629	2871
F157R97	159	-119	7	2086	2108	2119	2461	2516	2549	—	—	—
Add for Motor Brake				53	55	55	93	90	93	93	112	112
Add for VARIGEAR® Brake				52	52	52	—	—	—	—	—	—

آتور صنعت
ATOORSANAT

4. Unit Weight - K-Series

Listed weights are for complete units less oil. For flanged units add the flange weight shown in second column to the complete unit weight shown in the chart (a negative value must be subtracted). For units with brakes, add the brake weight listed at the bottom of the chart. All weights are approximate.

Note: All weights listed are in pounds. Oil weighs approximately 7.5 lbs/gallon (2 lb/liter). Reference Lubrication Sheet for volume of oil required.

Model	Add for			VU/VZ 01		VU/VZ 11	VU/VZ 21	VU/VZ 31		
	KF	KA	KAF	DT71	DT80	DT90	DT100	DT100	DV112	DV132S
K37	7	0	4	90	97	145	—	—	—	—
K47	9	0	7	106	113	161	236	302	327	338
K47R37	9	0	7	130	137	185	—	—	—	—
K57	4	0	4	123	130	178	253	319	344	355
K57R37	4	0	4	145	152	200	—	—	—	—
K67	13	-4	7	132	139	187	202	328	353	364
K67R37	13	-4	7	156	163	211	—	—	—	—
K77	20	-18	0	—	—	240	315	381	406	417
K77R37	20	-18	0	207	214	262	—	—	—	—
K87	53	-13	33	—	—	—	366	432	457	468
K87R57	53	-13	33	220	287	335	410	476	501	512
K97	75	-22	31	—	—	—	—	527	552	563
K97R57	75	-22	31	377	384	432	507	573	598	609
K107	51	-37	20	—	—	—	—	—	—	—
K107R77	51	-37	20	—	—	694	769	835	860	871
K127	84	-60	18	—	—	—	—	—	—	—
K127R77	84	-60	18	—	—	981	1056	1122	1147	1158
K127R87	84	-60	18	—	—	—	1100	1166	1191	1202
K157	198	-95	33	—	—	—	—	—	—	—
K157R97	198	-95	33	—	—	—	—	1761	1786	1797
K157R107	198	-95	33	—	—	—	—	—	—	—
K167	—	-88	—	—	—	—	—	—	—	—
K167R97	—	-88	—	—	—	—	—	2621	2646	2657
K167R107	—	-88	—	—	—	—	—	—	—	—
K187	—	-150	—	—	—	—	—	—	—	—
K187R97	—	-150	—	—	—	—	—	3900	3925	3936
K187R107	—	-150	—	—	—	—	—	—	—	—
Add for Motor Brake				6.5	6.5	22	22	22	26.5	33
Add for VARIGEAR® Brake				13	13	13	31	36	36	36

آتور صنعت ATOORSANAT

آتور صنعت ATOORSANAT SEW EURODRIVE

Model	Add For			VU/VZ 41			VU 51			VU 6		
	KF	KA	KAF	DV132M	DV132ML	DV160M	DV160L	DV180M	DV180L	DV180L	DV200	DV225
K37	7	0	4	—	—	—	—	—	—	—	—	—
K47	9	0	7	—	—	—	—	—	—	—	—	—
K47R37	9	0	7	—	—	—	—	—	—	—	—	—
K57	4	0	4	—	—	—	—	—	—	—	—	—
K57R37	4	0	4	—	—	—	—	—	—	—	—	—
K67	13	-4	7	—	—	—	—	—	—	—	—	—
K67R37	13	-4	7	—	—	—	—	—	—	—	—	—
K77	20	-18	0	582	604	615	—	—	—	—	—	—
K77R37	20	-18	0	—	—	—	—	—	—	—	—	—
K87	53	-13	33	633	655	666	1008	1063	1096	—	—	—
K87R57	53	-13	33	—	—	—	—	—	—	—	—	—
K97	75	-22	31	728	750	761	1103	1158	1191	—	—	—
K97R57	75	-22	31	—	—	—	—	—	—	—	—	—
K107	51	-37	20	959	544	992	1334	1389	1422	1536	1709	1951
K107R77	51	-37	20	1036	1058	1069	—	—	—	—	—	—
K127	84	-60	18	—	—	—	1621	1676	1709	1850	1996	2238
K127R77	84	-60	18	1323	1345	1356	—	—	—	—	—	—
K127R87	84	-60	18	1367	1389	1400	1742	1797	1830	—	—	—
K157	198	-95	33	—	—	—	—	—	—	2346	2492	2734
K157R97	198	-95	33	1962	1984	1995	2337	2392	2425	—	—	—
K157R107	198	-95	33	2025	2050	2061	2403	2458	2491	2632	2778	3020
K167	—	-88	—	—	—	—	—	—	—	3228	3374	3616
K167R97	—	-88	—	2822	2844	2855	3197	3252	3285	—	—	—
K167R107	—	-88	—	2885	2910	2921	3263	3318	3351	3492	3638	3880
K187	—	-132	—	—	—	—	—	—	—	4507	4653	4895
K187R97	—	-132	—	4101	4123	4134	4476	4531	4564	—	—	—
K187R107	—	-132	—	4164	4189	4200	4542	4597	4630	4771	4917	5159
Add for Brake				53	55	55	93	90	93	93	112	112
Add for VARIGEAR® Brake				52	52	52	—	—	—	—	—	—

آتور صنعت ATOORSANAT

5. Unit Weight - S-Series

Listed weights are for complete units less oil. For flanged units add the flange weight shown in second column to the complete unit weight shown in the chart (a negative value must be subtracted). For units with brakes, add the brake weight listed at the bottom of the chart. All weights are approximate.

Note: All weights listed are in pounds. Oil weighs approximately 7.5 lbs/gallon (2 lb/liter). Reference Lubrication Sheet for volume of oil required.

Model	Add for			VU/VZ 01		VU/VZ 11	VU/VZ 21	VU/VZ 31		
	SF	SA	SAF	DT71	DT80	DT90	DT100	DT100	DV112	DV132S
S37	0	0	0	79	86	—	—	—	—	—
S47	9	7	15	86	93	141	—	—	—	—
S57	9	4	13	95	102	150	—	—	—	—
S67	15	13	29	—	—	172	247	313	338	349
S67R37	15	13	29	141	148	196	—	—	—	—
S77	22	15	37	—	—	107	291	357	382	393
S77R37	22	15	37	185	192	240	—	—	—	—
S87	33	-4	29	—	—	—	383	449	474	485
S87R57	33	-4	29	298	305	353	428	494	519	530
S97	44	-4	26	—	—	—	—	593	618	629
S97R57	44	-4	26	445	452	500	575	641	666	677
Add for Motor Brake				6.5	6.5	22	22	22	26.5	33
Add for VARIGEAR® Brake				13	13	13	31	36	36	36

Model	Add For			VU/VZ 41			VU 51		
	SF	SA	SAF	DV132M	DV132ML	DV160M	DV160L	DV180M	DV180L
S37	0	0	0	—	—	—	—	—	—
S47	9	7	15	—	—	—	—	—	—
S57	9	4	13	—	—	—	—	—	—
S67	15	13	29	—	—	—	—	—	—
S67R37	15	13	29	—	—	—	—	—	—
S77	22	15	37	558	580	591	—	—	—
S77R37	22	15	37	558	580	591	—	—	—
S87	33	-4	29	650	672	683	1025	1080	1113
S87R57	33	-4	29	—	—	—	—	—	—
S97	44	-4	26	794	816	827	1169	1224	1257
S97R57	44	-4	26	—	—	—	—	—	—
Add for Brake				53	55	55	93	90	90
Add for VARIGEAR® Brake				52	52	52	—	—	—

آتور صنعت ATOORSANAT

آتور صنعت ATOORSANAT SEW EURODRIVE

Compatibility - Pinion Gear Bore Diameters

The selection tables show a wide range of VARIGEAR® and gear unit combinations. When it is necessary to substitute a reducer for one shown in the selection tables the following chart lists the possible combinations by gear unit ratios. Where no ratio is shown for a desired VARIGEAR®, then either the pinion gear bore is not available or the required VARIGEAR® to gearcase flange is not available. In all cases when substituting a VARIGEAR®, the gear unit's torque capacity should not be exceeded. The compatibility of motors with the VARIGEAR® may be determined by referring to the Non-Geared selection pages or appropriate dimension pages.

VU/VZ 01 10mm Pinion Gear Bore Diameter		
Gear Unit Size	**Gear Stages**	**Permissible Ratios for VARIGEAR®**
RX/RXF57	1	1.65 - 5.50
RX/RXF67	1	2.04 - 6.07
R/RF27	2 3	3.37 - 28.37 24.47 - 135.09
R/RF37	2 3	3.41 - 28.32 24.42 - 134.82
R/RF47	2 3	4.85 - 7.76, 10.15 - 33.79 29.88 - 176.88
R/RF57	2 3	6.41 - 9.06, 11.88 - 26.31 30.18 - 186.89
R/RF67	2 3	6.27 - 7.79, 12.7 - 28.13 32.27 - 199.81
R..47R37	4 5 (2/3) 5 (3/2) 6	98 - 429, 502 - 546 471, 554 - 2598 344 - 2246, 2625 - 2856 2898 - 13598
R..57R37	4 5 (2/3) 5 (3/2) 6	134 - 359 410 - 2957 142 - 1732 1967 - 14369
R..67R37	4 5 (2/3) 5 (3/2) 6	159 - 443 486 - 2682 158 - 2136 2403 - 15361
R..77R37	4 5 (2/3) 5 (3/2) 6	186 - 520 571 - 3151 149 - 2345 2671 - 16370
R..87R57	4 5 (2/3) 5 (3/2) 6	195 - 538 649 - 4020 236 - 268, 456 - 776, 885, 1143 - 1737 1961, 2873 - 17452
R..97R57	4 5 (2/3) 5 (3/2) 6	227, 297 - 625 755 - 4678 296 - 431, 632 - 3065 3481 - 21769
F..37	2 3	4.22 - 7.44, 8.97 - 23.63 23.88 - 128.51
F..47	2 3	6.34 - 8.96, 13.93 - 30.86 28.88 - 190.76
F..57	2 3	6.58 - 9.31, 13.52 - 40.13 30.15 - 199.70
F..67	2 3	7.53 - 9.08, 18.29 - 36.30 43.20 - 228.99
F..57R37	4 5 (2/3) 5 (3/2) 6	134 - 426 483 - 2854 155 - 1106 1238 - 14832

VU/VZ 01 10mm Pinion Gear Bore Diameter		
Gear Unit Size	**Gear Stages**	**Permissible Ratios for VARIGEAR®**
F..67R37	4 5 (2/3) 5 (3/2) 6	176 - 500 539 - 3377 175 - 2106 2439 - 19199
F..77R37	4 5 (2/3) 5 (3/2) 6	292 - 815 893 - 4931 199 - 1728 2029 - 19180
F..87R57	4 5 (2/3) 5 (3/2) 6	193 - 662 748 - 4952 452 - 3244 3721 - 23042
F..97R57	4 5 (2/3) 5 (3/2) 6	242 - 275, 361 - 892 1023 - 6338 208 - 285, 529 - 3906 4333 - 29211
K..37	3	5.36 - 106.38
K..47	3	7.36 - 11.77, 13.65 - 31.30, 39.61 - 131.87
K..57	3	9.59 - 11.92, 19.34 - 35.70, 48.89 - 145.14
K..67	3	10.63 - 12.48, 19.30 - 35.62, 48.77 - 144.79
K..47R37	5 6	94 - 1222 1388 - 10138
K..57R37	5 6	97 - 1743 1986 - 12169
K..67R37	5 6	122 - 1739 1981 - 12139
K..77R37	5 6	154 - 2050 2370 - 15310
K..87R57	5 6	201 - 250, 373 - 2088 2371 - 14829
K..97R57	5 6	232 - 305, 382, 573 - 2419 2757 - 18091
S..37	3	6.80 - 18.24, 19.89 - 51.30, 55.93 - 157.43
S..47	3	7.28 - 17.62, 20.33 - 54.59, 63.80 - 201.00
S..57	3	7.28 - 17.62, 20.33 - 54.59, 63.80 - 201.00
S..67R37	5 6	156 - 809 914 - 21362
S..77R37	5 6	219 - 1100 1245 - 25493
S..87R57	5 6	205/831 - 930, 1631 - 3475 3872 - 25987
S..97R57	5 6	287 - 376, 626 - 1394 1574 - 33818

آتور صنعت ATOORSANAT

VU/VZ 11 12mm Pinion Gear Bore Diameter		
Gear Unit Size	**Gear Stages**	**Permissible Ratios for VARIGEAR®**
RX/RXF57	1	1.30-4.35
RX/RXF67	1	1.61-5.18
RX/RXF77	1	2.13-6.41
R/RF37	2 3	3.41-22.27 24.42-105.28
R/RF47	2 3	3.83-26.74 23.59-139.99
R/RF57	2 3	5.05-26.31 26.97-147.92
R/RF67	2 3	4.93-7.79, 10.00-28.13 28.83-158.14
R/RF77	2 3	6.79-8.59, 12.33-23.37 29.00-166.59
R..47R37	4 5 (2/3) 5 (3/2) 6	98 - 429 471, 554 - 20295 344 - 2246 2898 - 10619
R..57R37	4 5 (2/3) 5 (3/2) 6	134 - 359 410 - 2309 142 - 1732 1967 - 9445
R..67R37	4 5 (2/3) 5 (3/2) 6	159 - 443 486 - 2094 158 - 2136 2403 - 11996
R..77R37	4 5 (2/3) 5 (3/2) 6	186 - 520 571 - 2460 149 - 2345 2671 - 12783
R..87R57	4 5 (2/3) 5 (3/2) 6	195 - 538 580 - 3182 236 - 1737 1961 - 13813
R..97R57	4 5 (2/3) 5 (3/2) 6	227 - 625 755 - 3702 249 - 3065 3481 - 17230
R..107R77	4 5 (2/3) 5 (3/2) 6	172, 220 - 469 528 - 3343 323 - 369, 717 - 1987 2688 - 17080
R..137R77	4 5 (2/3) 5 (3/2) 6	297 - 564 699 - 4018 223 - 381, 560, 730 - 2658 2993 - 18945
R..147R77	5 (3/2) 6	415 - 619, 889, 1166 - 2555 2898 - 12344, 15923 - 18210
F..37	2 3	3.77 - 23.63 23.88 - 100.36
F..47	2 3	4.99 - 30.86 28.88 - 150.06
F..57	2 3	5.18 - 34.24 30.15 - 157.09
F..67	2 3	5.95 - 9.08, 14.46 - 36.30 34.01 - 195.39
F..77	2 3	8.26 - 9.30, 17.49 - 36.58 38.23 - 225.79
F..57R37	4 5 (2/3) 5 (3/2) 6	134 - 426 483 - 2012 155 - 1106 1238 - 5289, 6913 - 9986

VU/VZ 11 12mm Pinion Gear Bore Diameter		
Gear Unit Size	**Gear Stages**	**Permissible Ratios for VARIGEAR®**
F..67R37	4 5 (2/3) 5 (3/2) 6	176 - 500 539 - 3377 175 - 2106 2439 - 14992
F..77R37	4 5 (2/3) 5 (3/2) 6	292 - 815 893 - 3851 199 - 1728 2029 - 14978
F..87R57	4 5 (2/3) 5 (3/2) 6	193 - 662 748 - 3919 345 - 3244 3721 - 18238
F..97R57	4 5 (2/3) 5 (3/2) 6	242 - 892 1023 - 5016 208 - 3906 4333 - 20813
F..107R77	4 5 (2/3) 5 (3/2) 6	340 - 644 800 - 4593 255 - 436, 640, 834 - 3037 3521 - 10039, 14767 - 21652
F..127R77	5 (3/2) 6	376 - 648, 930 - 2672 3031 - 12912, 16656 - 19048
K..37	3	5.36 - 83.69
K..47	3	5.81 - 104.37
K..57	3	7.55 - 11.92, 15.22 - 123.85
K..67	3	8.37 - 12.48, 15.19 - 123.54
K..77	3	10.84 - 12.36, 20.25 - 35.20, 51.18 - 154.02
K..47R37	5 6	94 - 1222 1388 - 6826
K..57R37	5 6	97 - 1743 1986 - 7277/9503
K..67R37	5 6	122 - 1739 1981 - 9479
K..77R37	5 6	154 - 2050 2370 - 11955
K..87R57	5 6	141 - 2088 2371 - 11737
K..97R57	5 6	199 - 305, 382 - 2419 2757 - 11677
K..107R77	5 6	251 - 364, 522 - 1713 1939 - 12211
K..127R77	5 6	418, 549 - 704, 899 - 1926 2607 - 14975
S..47, S..57	3	7.28 - 17.62, 20.33 - 54.59, 67.20, 71.75 - 158.12
S..67	3	8.69 - 17.28, 20.37 - 23.22 24.44 - 54.70, 62.35 - 65.63, 75.06 85.83 - 217.41
S..77	3	12.07 - 18.42, 20.99, 22.89 28.41 - 53.87, 63.03 71.33 - 75.0985.22 - 256.47
S..67R37	5 6	156 - 809 914 - 16682
S..77R37	5 6	219 - 1100 1245 - 19907
S..87R57	5 6	205 - 255, 323, 435, 558 - 3475 3872 - 20568
S..97R57	5 6	205, 252 - 1394 1574 - 21537

آتور صنعت ATOOR SANAT

آتور صنعت ATOORSANAT SEW EURODRIVE

VU/VZ 21 14mm Pinion Gear Bore Diameter		
Gear Unit Size	**Gear Stages**	**Permissible Ratios for VARIGEAR®**
RX/RXF57	1	1.30-3.79
RX/RXF67	1	1.40-4.53
RX/RXF77	1	1.42-5.63
RX/RXF87	1	2.15-7.63
R/RF47	2	3.83-23.28
	3	23.59-121.87
R/RF57	2	4.39 - 26.31
	3	26.97 - 128.77
R/RF67	2	4.29 - 28.13
	3	28.83 - 137.67
R/RF77	2	5.31-23.37
	3	25.23-145.67
R/RF87	2	7.13-9.14, 13.33-34.40
	3	27.88 - 216.54
R..87R57	4	195 - 538
	5 (2/3)	580 - 2770
	5 (3/2)	209 - 1737
	6	1961 - 4206, 8109 - 12025
R..97R57	4	227 - 625
	5 (2/3)	755 - 3019
	5 (3/2)	209 - 3065
	6	3481 - 14999
R..107R77	4	172 - 469
	5 (2/3)	528 - 2653
	5 (3/2)	187 - 1987
	6	2339 - 14936
R..137R77	4	297 - 564
	5 (2/3)	609 - 3514
	5 (3/2)	175 - 2658
	6	2993 - 12921, 16566
R..147R77	5 (3/2)	415 - 2555
	6	2898 - 12344, 15923
R..147R87	5 (3/2)	326 - 426
F..57	2	5.18 - 29.94
	3	30.15 - 136.16
F..67	2	3.97 - 36.30
	3	34.01 - 170.85
F..77	2	5.76 - 9.30, 12.20 - 36.58
	3	25.54 - 198.31
F..87	2	7.35 - 8.29, 17.12 - 33.92
	3	39.30 - 50.36, 76.39 - 270.68

VU/VZ 21 14mm Pinion Gear Bore Diameter		
Gear Unit Size	**Gear Stages**	**Permissible Ratios for VARIGEAR®**
F..87R57	4	193 - 662
	5 (2/3)	748 - 3196
	5 (3/2)	249 - 3244
	6	3721 - 15877
F..97R57	4	242 - 892
	5 (2/3)	1023 - 4367
	5 (3/2)	195 - 3906
	6	4333 - 18119
F..107R77	4	266 - 644
	5 (2/3)	696 - 4016
	5 (3/2)	190 - 3037
	6	3521 - 10039, 14767, 18933
F..127R77	5 (3/2)	376 - 2672
	6	3031 - 12912, 16656
F..127R87	5 (3/2)	418
K..47	3	5.81 - 90.86
K..57	3	6.57 - 108.29
K..67	3	7.28 - 108.03
K..77	3	7.24 - 135.28
K..87	3	11.17 - 16.00, 19.45 - 31.39, 49.16 - 174.19
K..87R57	5	141 - 2088
	6	2371 - 10217
K..97R57	5	199 - 2419
	6	2757 - 11677
K..107R77	5	140 - 1713
	6	1939 - 8328, 10677
K..127R77	5	418 - 1926
	6	2268 - 12440
K..127R87	5	330 - 418, 536
S..67	3	7.56 - 17.28, 20.37 - 23.22, 24.44 - 54.70, 62.35 - 65.63, 78.00 - 190.11
S..77	3	8.06 - 18.42, 20.99, 22.89 - 775.09, 85.22 - 225.26
S..87	3	12.21 - 19.70, 21.43, 25.50 - 57.00 64.27 - 70.43, 81.76 - 288.00
S..87R57	5	205 - 3475
	6	3872 - 16774
S..97R57	5	205 - 1394
	6	1574 - 5780, 7554 - 18749

آتور صنعت ATOORSANAT

VU/VZ 31 18mm Pinion Gear Bore Diameter		
Gear Unit Size	**Gear Stages**	**Permissible Ratios for VARIGEAR®**
RX/RXF87	1	1.60 - 5.56
RX/RXF97	1	2.24 - 7.16
R/RF57	2 3	4.39 - 18.60 26.97 - 48.23, 80.55 - 89.71
R/RF67	2 3	4.29 - 19.89 28.83 - 51.56, 69.75 - 95.91
R/RF77	2 3	5.31 - 23.37 25.23 - 102.99
R/RF87	2 3	5.30 - 34.40 27.88 - 155.34
R/RF97	2 3	7.12 - 9.29, 12.39 - 32.05 27.58 - 186.30
R..87R57	4 5 (2/3) 5 (3/2) 6	195 - 400 580 - 1037, 1733 - 1930 209 - 1737 2209 - 2873, 3744
R..97R57	4 5 (2/3) 5 (3/2) 6	227 - 466 755 - 1207, 2016 - 2245 209 - 824, 1228 - 1396 3481 - 4004
R..107R77	4 5 (2/3) 5 (3/2) 6	172 - 469 528 - 2067 187 - 1987 2339 - 9547
R..137R77	4 5 (2/3) 5 (3/2) 6	297 - 564 609 - 2484 175 - 2658 2993 - 11712
R..147R77	5 (3/2) 6	415 - 2555 2898 - 12344
R..147R87	5 (3/2)	159 - 533
R..167R97	5 (3/2) 6	335 - 376/503, 656 - 2657 3099 - 7749, 10509 - 17361
F..57	2 3	5.18 - 21.17 30.15 - 50.10, 83.46 - 93.47
F..67	2 3	3.97 - 27.41 34.01 - 67.65, 90.59 - 120.79
F..77	2 3	4.28 - 31.51 25.54 - 142.27
F..87	2 3	5.63 - 8.29, 13.12 - 33.92 29.20 - 197.20
F..97	2 3	7.07 - 9.06, 17.25 - 43.28 44.49 - 72.29, 80.31 - 276.77
F..87R57	4 5 (2/3) 5 (3/2) 6	193 - 398 748 - 1278, 1717 - 2134 249 - 1300 3721 - 4245, 5510

VU/VZ 31 18mm Pinion Gear Bore Diameter		
Gear Unit Size	**Gear Stages**	**Permissible Ratios for VARIGEAR®**
F..97R57	4 5 (2/3) 5 (3/2) 6	242 - 569 1023 - 1468/2448 195 - 898, 1327, 2907 6469/14022
F..107R77	4 5 (2/3) 5 (3/2) 6	266 - 644 696 - 2839 190 - 3037 3521 - 3948, 5223 - 10039
F..127R77	5 (3/2) 6	376 - 2672 3031 - 5153, 7643 - 12912
F..127R87	5 (3/2)	166 - 483
F..157R97	5 (3/2) 6	197, 232 - 302, 446, 576 - 2427 1441 - 20212
K..47	3	5.81 - 21.81, 35.39 - 63.30
K..57	3	6.57 - 30.28, 38.49 - 76.56
K..67	3	7.28 - 30.22, 38.39 - 76.37
K..77	3	7.24 - 97.05
K..87	3	8.29 - 11.17, 14.45 - 126.91
K..97	3	18.96 - 38.30, 47.93 - 153.21
K..87R57	5 6	141 - 951 2371 - 2728, 4562
K..97R57	5 6	199 - 743, 1430 - 1625 2757, 4669, 6970
K..107R77	5 6	140 - 1713 1939 - 6184
K..127R77	5 6	418 - 1926 2268 - 5804, 8443
K..127R87	5	147 - 536
K..157R97	5 6	333, 434 - 567, 756 - 1659 1805 - 11368
K..167R97	5 6	369, 481, 632 - 2182 2263 - 11573
K..187R97	5 6	527 - 3609 2818 - 24353
S..67	3	7.56 - 20.30, 23.33, 26.93 - 46.40 58.80 - 67.57, 78.00 - 134.00
S..77	3	8.06 - 18.42, 20.99, 22.89 - 56.92 66.67, 75.20 - 161.60
S..87	3	9.07 - 19.70, 21.43, 25.50 - 57.00 64.27 - 77.14, 86.15, 99.26 - 222.40
S..97	3	13.07 - 23.59, 26.39, 32.60 - 60.59 71.43, 80.85 - 286.40
S..87R57	5 6	205 - 2586 3872 - 5187/6706, 99040 - 11200
S..97R57	5 6	205 - 928 1574 - 2081, 4017, 14576 - 16233

آتور صنعت ATOOR SANAT

آتور صنعت ATOORSANAT SEW EURODRIVE

VU/VZ 41 22mm Pinion Gear Bore Diameter		
Gear Unit Size	**Gear Stages**	**Permissible Ratios for VARIGEAR®**
RX/RXF87	1	1.39-4.50
RX/RXF97	1	1.42-5.79
RX/RXF107	1	1.71-6.63
R/RF77	2 3	5.31-18.80 25.23-45.81, 65.77-81.80
R/RF87	2 3	5.30-27.84 27.88-63.68, 81.92-124.97
R/RF97	2 3	4.50-32.05 27.58-150.78
R/RF107	2 3	5.82-7.86, 10.13-30.77 29.49-203.16
R..107R77	4 5 (2/3) 5 (3/2) 6	172 - 377 528 - 717, 919 - 1550 187 - 1827 2339 - 2688, 3432 - 5168, 6743 - 7583
R..137R77	4 5 (2/3) 5 (3/2) 6	297 - 453 609 - 1105, 1586 - 1863 175 - 831, 1226, 1598 - 1839 2993 - 4464, 5834, 2479 - 8784
R..147R77	5 (3/2) 6	415 - 1705 2898 -3302, 4325, 5568 - 8443
R..147R87	5 (3/2)	159 - 533
R..167R97	5 (3/2) 6	279 - 2657 3099 - 7749, 10509 - 14051
R..167R107	4 5 (2/3) 5 (3/2)	168 - 446 511 - 2436 200 - 270/349
F..77	2 3	4.28 - 25.50 25.54 - 58.32, 75.02 - 114.45
F..87	2 3	4.12 - 33.92 29.20 - 159.61
F..97	2 3	4.57 - 43.28 32.50 - 223.88
F..107	2 3	7.40 - 9.69, 14.67 - 33.79 37.61 - 254.40

VU/VZ 41 22mm Pinion Gear Bore Diameter		
Gear Unit Size	**Gear Stages**	**Permissible Ratios for VARIGEAR®**
F..107R77	4 5 (2/3) 5 (3/2) 6	266 - 518 696 - 1263, 1813 - 2255 190 - 950, 1243 - 1401, 1826 3948, 2223 - 5954, 8548 - 10039
F..127R77	5 (3/2) 6	376 - 2357 3031 - 3454, 4533, 7643 - 8831
F..127R87	5 (3/2)	166 - 483
F..157R97	5 (3/2) 6	197 - 2427 1441 - 16358
K..77	3	7.24 - 30.89 ,40.04 - 78.07
K..87	3	7.21 - 102.71
K..97	3	8.71 - 123.93
K..107	3	8.69 - 29.00, 32.69 - 143.47
K..107R77	5 6	140 - 696, 904 - 1030 1939 - 2286, 3358, 5138 - 5662
K..127R77	5 6	418 - 899, 1177, 1541 2268 - 4423, 5804
K..127R87	5	147 - 536
K..157R97	5 6	291 - 1659 1805 - 7734
K..157R107	5	107 - 122, 213, 253 - 299, 385
K..167R97	5 6	369 - 2182 2263 - 10264
K..167R107	5	118 - 160, 206 - 318
K..187R97	5 6	527 - 3609 2818 - 16978
K..187R107	5	193 - 835
S..77	3	8.06 - 18.42, 22.22, 25.07 - 43.33, 56.92, 66.67, 75.20 - 130.00
S..87	3	7.88 - 19.70, 21.43, 25.50 - 64.00, 77.14, 86.15, 99.26 - 180.00
S..97	3	8.26 - 23.59, 26.39, 32.60 - 78.26, 89.60 - 231.67

آتور صنعت ATOORSANAT

VU 51 28mm Pinion Gear Bore Diameter		
Gear Unit Size	**Gear Stages**	**Permissible Ratios for VARIGEAR®**
RX/RXF97	1	1.42 - 4.52
RX/RXF107	1	1.44 - 5.19
R/RF87	2 3	5.30 - 21.51 27.88 - 47.58, 81.92 - 93.38
R/RF97	2 3	4.50 - 25.03 27.58 - 59.92, 72.17 - 116.48
R/RF107	2 3	4.92 - 30.77 29.49 - 158.68
R/RF137	2 3	6.38 - 7.59, 10.79 - 29.57 27.83 - 174.40
R/RF147	2 3	7.25, 11.99 - 20.44 29.95 - 163.31
R..147R87	5 (3/2)	159 - 533
R..167R97	5 (3/2) 6	279 - 656, 861 - 1123, 1670 - 2333 3099 - 4650, 6894 - 7749
R..167R107	4 5 (2/3) 5 (3/2)	168 - 446 511 - 1849, 2298 169 - 349
F..87	2 3	4.12 - 26.50 29.20 - 123.29
F..97	2 3	4.57 - 33.91 32.50 - 89.85, 102.16 - 174.87
F..107	2 3	6.22 - 9.69, 12.33 - 33.79 31.80 - 199.31
F..127	2 3	6.80 - 8.86, 12.54 - 26.86 31.33 - 170.83
F..157R97	5 (3/2) 6	197 - 1308, 1944 - 2427 1441 - 5404, 8026 - 10033
K..87	3	7.21 - 79.34
K..97	3	8.71 - 96.80
K..107	3	8.69 - 112.41
K..127	3	10.74 - 12.79, 17.77 - 136.14
K..157	3	18.37 - 31.30, 46.79 - 150.41
K..127R87	5	147 - 536
K..157R97	5 6	291 - 1365 1805 - 2610, 3516, 4514 - 5074
K..157R107	5	107 - 385
K..167R97	5 6	369 - 1296, 1704 2263 - 2755, 4079 - 5355
K..167R107	5	118 - 318
K..187R97	5 6	527 - 2519 2818 - 6747, 8126 - 13116
K..187R107	5	163 - 835
S..87	3	7.88 - 20.27, 24.43, 27.28 - 44.03 64.00, 77.14, 86.15, 99.26 - 139.05
S..97	3	8.26 - 23.59, 26.39, 32.60 - 55.79 65.45, 78.26, 89.60 - 180.95

VU 6 32mm Pinion Gear Bore Diameter		
Gear Unit Size	**Gear Stages**	**Permissible Ratios for VARIGEAR®**
R/RF107	2 3	4.92-24.90 29.49-65.60, 78.57-127.68
R/RF137	2 3	5.15-29.57 27.83-141.12
R/RF147	2 3	5.89-7.25, 9.74-20.44 24.19-146.91
R/RF167	2 3	11.99-37.74 27.96-186.93
R..167R107	4 5 (2/3) 5 (3/2)	168 - 361 511 - 1849 169 - 349
F..107	2 3	6.22 - 33.79 31.80 - 161.28
F..127	2 3	5.52 - 26.86 25.30 - 153.67
F..157	2 3	16.85 - 53.55 40.06 - 267.43
K..107	3	8.69 - 90.96
K..127	3	8.68 - 110.18
K..157	3	14.92 - 122.39
K..167	3	20.32 - 32.25, 42.89 - 134.99
K..187	3	27.92 - 42.51, 73.96 - 179.86
K..157R107	5	107 - 385
K..167R107	5	118 - 318
K..187R107	5	163 - 835

آتور صنعت ATOORSANAT

آتور صنعت ATOORSANAT SEW EURODRIVE

1.VARIGEAR® with Parallel Helical Gear Units

5:1						
Input/Output P_n / P_{a2} HP	Speed Range n_{a1} - n_{a2} rpm	Gear Ratio *i*	Output Torque T_{a2} lb-in	Gear Stages Pri	Gear Stages Sec	Model
0.50/0.40	448 - 2340	1.65	11	1	-	
	385 - 2010	1.92	13	1	-	
	363 - 1890	2.04	13	1	-	
	312 - 1630	2.37	16	1	-	
	280 - 1460	2.64	17	1	-	
	254 - 1325	2.91	19	1	-	
	236 - 1230	3.14	21	1	-	**RX57 VU01 DT71D4**
	208 - 1085	3.55	23	1	-	
	195 - 1020	3.79	25	1	-	
	170 - 887	4.35	29	1	-	
	146 - 761	5.07	33	1	-	
	134 - 702	5.50	36	1	-	
	122 - 636	6.07	40	1	-	**RX67 VU01 DT71D4**
	112 - 586	6.59	43	2	-	
	97 - 506	7.63	50	2	-	
	91 - 473	8.16	54	2	-	
	79 - 410	9.41	62	2	-	
	73 - 381	10.13	67	2	-	
	62 - 325	11.86	78	2	-	
	56 - 291	13.28	87	2	-	
	47 - 247	15.63	103	2	-	
	41 - 213	18.08	119	2	-	
	38 - 199	19.35	127	2	-	
	33 - 173	22.32	147	2	-	
	30 - 158	24.47	161	3	-	
	28 - 148	26.09	171	2	-	
	26 - 136	28.37	186	2	-	
	23 - 119	32.47	215	3	-	**R27 VU01 DT71D4**
	20 - 105	36.79	240	3	-	
	19 - 98	39.25	260	3	-	
	16 - 86	44.90	295	3	-	
	15 - 80	48.17	315	3	-	
	13 - 69	55.87	365	3	-	
	12 - 63	61.30	405	3	-	
	11 - 56	69.47	455	3	-	
	10 - 52	74.11	485	3	-	
	8.7 - 46	84.78	555	3	-	
	8.1 - 42	90.96	600	3	-	
	7.0 - 37	105.49	695	3	-	
	6.0 - 31	123.91	810	3	-	
	5.5 - 29	135.09	890	3	-	
	5.3 - 28	139.99	920	3	-	
	4.5 - 24	162.94	1070	3	-	**R47 VU01 DT71D4**
	4.2 - 22	176.88	1160	3	-	
	4.0 - 21	186.89	1230	3	-	**R57 VU01 DT71D4**
	3.7 - 19	199.81	1310	3	-	**R67 VU01 DT71D4**
	3.5 - 18	139.99	1420	3	-	
	3.0 - 15	162.94	1650	3	-	**R47 VU01 DT80K6**
	2.8 - 14	176.88	1800	3	-	
	2.6 - 13	186.89	1900	3	-	**R57 VU01 DT80K6**
	2.5 - 12	199.81	2030	3	-	**R67 VU01 DT80K6**

Please consult your SEW-Eurodrive Assembly Center for additional speed (RPM) selections and dimension pages not listed.

آتور صنعت
ATOORSANAT

5:1

Input/Output P_n / P_{a2} HP	Speed Range n_{a1} - n_{a2} rpm	Gear Ratio *i*	Output Torque T_{a2} lb-in	Gear Stages Pri	Gear Stages Sec	Model
0.50/0.38	2.1 - 11	348	2150	2	2	
	2.0 - 10	372	2300	2	2	**R47R37 VU01 DT71D4**
	1.8 - 9.5	408	2490	3	2	
	1.7 - 9.0	429	2650	2	2	
	1.6 - 8.2	471	2870	3	2	
	1.4 - 7.2	537	3270	3	2	**R57R37 VU01 DT71D4**
	1.2 - 6.4	604	3680	3	2	
	1.1 - 6.0	646	3930	3	2	
	1.0 - 5.3	730	4450	2	3	**R67R37 VU01 DT71D4**
	0.99 - 5.1	750	4570	3	2	
	0.88 - 4.6	836	5090	3	2	
	0.86 - 4.5	858	5230	2	3	
	0.81 - 4.2	915	5570	2	3	
	0.79 - 4.1	940	5730	3	2	**R77R37 VU01 DT71D4**
	0.71 - 3.7	1047	6380	2	3	
	0.68 - 3.6	1084	6600	3	2	
	0.66 - 3.4	1124	6850	2	3	
	0.65 - 3.4	1143	6960	3	2	
	0.60 - 3.1	1232	7500	2	3	
	0.57 - 3.0	1303	7940	3	2	
	0.53 - 2.8	1395	8500	2	3	
	0.50 - 2.6	1489	9070	2	3	**R87R57 VU01 DT71D4**
	0.49 - 2.5	1524	9280	3	2	
	0.43 - 2.2	1737	10600	3	2	
	0.38 - 2.0	1930	11800	2	3	
	0.35 - 1.8	2129	13000	2	3	
	0.33 - 1.7	2245	13700	2	3	
	0.32 - 1.7	2311	14100	3	2	
	0.28 - 1.4	2668	16300	2	3	
	0.27 - 1.4	2722	16600	3	2	
	0.24 - 1.3	3065	18700	3	2	**R97R57 VU01 DT71D4**
	0.21 - 1.1	3481	20900	3	3	
	0.20 - 1.0	3702	22500	2	3	
	0.18 - 0.96	4004	24000	3	3	
	0.17 - 0.90	4309	26200	2	3	
0.75/.060	448 - 2340	1.65	16	1	-	
	385 - 2010	1.92	19	1	-	
	363 - 1890	2.04	20	1	-	
	312 - 1630	2.37	23	1	-	
	280 - 1460	2.64	26	1	-	
	254 - 1325	2.91	29	1	-	
	236 - 1230	3.14	31	1	-	**RX57 VU01 DT80K4**
	208 - 1085	3.55	35	1	-	
	195 - 1020	3.79	37	1	-	
	170 - 887	4.35	43	1	-	
	146 - 761	5.07	50	1	-	
	134 - 702	5.50	54	1	-	
	122 - 636	6.07	60	1	-	**RX67 VU01 DT80K4**
	112 - 586	6.59	65	2	-	
	97 - 506	7.63	75	2	-	
	91 - 473	8.16	80	2	-	**R27 VU01 DT80K4**
	79 - 410	9.41	93	2	-	
	73 - 381	10.13	100	2	-	

Please consult your SEW-Eurodrive Assembly Center for additional speed (RPM) selections and dimension pages not listed.

آتور صنعت ATOORSANAT
SEW EURODRIVE

5:1							
Input/Output P_n / P_{a2} HP	Speed Range n_{a1} - n_{a2} rpm	Gear Ratio *i*	Output Torque T_{a2} lb-in	Gear Stages Pri	Gear Stages Sec	Model	
0.75/0.60	62 - 325	11.86	117	2	-		
	56 - 291	13.28	131	2	-		
	47 - 247	15.63	154	2	-		
	41 - 213	18.08	178	2	-		
	38 - 199	19.35	191	2	-		
	33 - 173	22.32	220	2	-		
	30 - 158	24.47	240	3	-		
	28 - 148	26.09	255	2	-		
	26 - 136	28.37	280	2	-		
	23 - 119	32.47	320	3	-		
	20 - 105	36.79	365	3	-	**R27 VU01 DT80K4**	
	19 - 98	39.25	385	3	-		
	16 - 86	44.90	440	3	-		
	15 - 80	48.17	475	3	-		
	13 - 69	55.87	550	3	-		
	12 - 63	61.30	605	3	-		
	11 - 56	69.47	685	3	-		
	10 - 52	74.11	730	3	-		
	8.7 - 46	84.78	840	3	-		
	8.1 - 42	90.96	900	3	-		
	7.0 - 37	105.49	1040	3	-		
	6.0 - 31	123.66	1220	3	-	**R37 VU01 DT80K4**	
	5.5 - 29	134.82	1330	3	-		
	5.3 - 28	139.99	1380	3	-		
	4.5 - 24	162.94	1610	3	-	**R47 VU01 DT80K4**	
	4.2 - 22	176.88	1740	3	-		
	4.0 - 21	186.89	1840	3	-	**R57 VU01 DT80K4**	
	3.7 - 19	199.81	1970	3	-	**R67 VU01 DT80K4**	
	3.5 - 18	139.99	2130	3	-	**R47 VU01 DT80N6**	
	3.0 - 15	162.94	2480	3	-		
	2.9 - 15	172.17	2620	3	-	**R57 VU01 DT80N6**	
	2.6 - 13	186.89	2850	3	-		
	2.5 - 12	199.81	3040	3	-	**R67 VU01 DT80N6**	
0.75/0.56	2.3 - 12	324	3010	2	2		
	2.1 - 11	359	3330	2	2	**R57R37 VU01 DT80K4**	
	1.8 - 9.4	410	3750	2	3		
	1.7 - 8.7	443	4110	2	2		
	1.5 - 7.8	495	4520	3	2	**R67R37 VU01 DT80K4**	
	1.3 - 6.7	574	5240	3	2		
	1.1 - 6.0	646	5900	3	2		
	1.0 - 5.3	731	6680	3	2	**R77R37 VU01 DT80K4**	
	0.98 - 5.1	757	6920	2	3		
	0.95 - 5.0	776	7090	3	2		
	0.92 - 4.8	802	7330	2	3		
	0.84 - 4.4	885	8090	3	2		
	0.79 - 4.1	931	8510	2	3		
	0.71 - 3.7	1037	9470	2	3	**R87R57 VU01 DT80K4**	
	0.65 - 3.4	1143	10400	3	2		
	0.60 - 3.1	1232	11300	2	3		
	0.57 - 3.0	1303	11900	3	2		
	0.53 - 2.8	1395	12700	2	3		
	0.50 - 2.6	1489	13600	2	3		
	0.47 - 2.4	1583	14500	3	2	**R97R57 VU01 DT80K4**	

Please consult your SEW-Eurodrive Assembly Center for additional speed (RPM) selections and dimension pages not listed.

آتور صنعت ATOORSANAT

5:1

Input/Output P_n / P_{a2} HP	Speed Range n_{a1} - n_{a2} rpm	Gear Ratio *i*	Output Torque T_{a2} lb-in	Gear Stages Pri	Gear Stages Sec	Model
0.75/0.56	0.46 - 2.4	1623	14800	2	3	
	0.43 - 2.2	1733	15800	2	3	
	0.41 - 2.1	1823	16700	3	2	
	0.37 - 1.9	2016	18400	2	3	
	0.36 - 1.9	2078	19000	3	2	**R97R57 VU01 DT80K4**
	0.33 - 1.7	2245	20500	2	3	
	0.32 - 1.7	2311	21100	3	2	
	0.28 - 1.4	2668	24400	2	3	
	0.27 - 1.4	2722	24900	3	2	
1.00/0.83	448 - 2340	1.65	22	1	-	
	385 - 2010	1.92	26	1	-	
	363 - 1890	2.04	28	1	-	
	312 - 1630	2.37	32	1	-	
	280 - 1460	2.64	36	1	-	
	254 - 1325	2.91	40	1	-	
	236 - 1230	3.14	43	1	-	**RX57 VU01 DT80N4**
	208 - 1085	3.55	48	1	-	
	195 - 1020	3.79	51	1	-	
	170 - 887	4.35	59	1	-	
	146 - 761	5.07	69	1	-	
	134 - 702	5.50	75	1	-	
	122 - 636	6.07	82	1	-	**RX67 VU01 DT80N4**
	112 - 586	6.59	89	2	-	
	97 - 506	7.63	104	2	-	
	91 - 473	8.16	111	2	-	
	79 - 410	9.41	128	2	-	
	73 - 381	10.13	138	2	-	
	62 - 325	11.86	161	2	-	
	56 - 291	13.28	180	2	-	
	47 - 247	15.63	210	2	-	
	41 - 213	18.08	245	2	-	
	38 - 199	19.35	265	2	-	
	33 - 173	22.32	305	2	-	
	30 - 158	24.47	330	3	-	
	28 - 148	26.09	355	2	-	**R27 VU01 DT80N4**
	26 - 136	28.37	385	2	-	
	23 - 119	32.47	440	3	-	
	20 - 105	36.79	500	3	-	
	19 - 98	39.25	535	3	-	
	16 - 86	44.90	610	3	-	
	15 - 80	48.17	655	3	-	
	13 - 69	55.87	760	3	-	
	12 - 63	61.30	830	3	-	
	11 - 56	69.47	940	3	-	
	10 - 52	74.11	1010	3	-	
	8.7 - 46	84.78	1150	3	-	
	8.1 - 43	90.77	1230	3	-	
	7.0 - 37	105.28	1430	3	-	**R37 VU01 DT80N4**
	6.0 - 31	123.66	1680	3	-	
	5.3 - 28	139.99	1900	3	-	
	4.5 - 24	162.94	2210	3	-	**R47 VU01 DT80N4**
	4.2 - 22	176.88	2400	3	-	
	4.0 - 21	186.89	2540	3	-	**R57 VU01 DT80N4**

Please consult your SEW-Eurodrive Assembly Center for additional speed (RPM) selections and dimension pages not listed.

آتور صنعت ATOORSANAT

آتور صنعت ATOORSANAT SEW EURODRIVE

5:1 - 6:1

Input/Output P_n / P_{a2} HP	Speed Range n_{a1} - n_{a2} rpm	Gear Ratio *i*	Output Torque T_{a2} lb-in	Gear Stages Pri	Gear Stages Sec	Model
1.00/0.83	3.7 - 19	199.81	2710	3	-	**R67 VU01 DT80N4**
	3.5 - 21	121.87	2520	3	-	**R47 VU11 DT90S6**
	3.3 - 20	128.77	2670	3	-	**R57 VU11 DT90S6**
	2.9 - 17	147.92	3060	3	-	
	2.7 - 16	158.14	3270	3	-	**R67 VU11 DT90S6**
	2.6 - 15	166.59	3450	3	-	**R77 VU11 DT90S6**
1.00/0.78	2.5 - 13	294	3700	3	2	**R67R37 VU01 DT80N4**
	2.4 - 12	310	3960	2	2	
	2.1 - 11	359	4590	2	2	
	1.9 - 10	384	4910	2	2	
	1.8 - 9.1	422	5390	2	2	**R77R37 VU01 DT80N4**
	1.7 - 8.9	436	5490	3	2	
	1.6 - 8.6	451	5760	2	2	
	1.5 - 7.9	488	6140	3	2	
	1.4 - 7.4	520	6650	2	2	
	1.3 - 6.9	560	7050	3	2	
	1.2 - 6.4	599	7540	3	2	**R87R57 VU01 DT80N4**
	1.1 - 5.6	685	8620	3	2	
	0.98 - 5.1	754	9490	2	3	
	0.95 - 5.0	776	9770	3	2	
	0.92 - 4.8	802	10100	2	3	
	0.84 - 4.4	885	11100	3	2	
	0.79 - 4.1	931	11700	2	3	
	0.71 - 3.7	1037	13100	2	3	
	0.69 - 3.6	1069	13500	3	2	**R97R57 VU01 DT80N4**
	0.68 - 3.6	1084	13600	2	3	
	0.61 - 3.2	1207	15200	2	3	
	0.60 - 3.1	1228	15500	3	2	
	0.53 - 2.8	1396	17600	3	2	
	0.52 - 2.7	1434	18100	2	3	
	0.47 - 2.4	1583	19900	3	2	
	0.43 - 2.2	1733	21800	2	3	
	0.41 - 2.1	1823	22900	3	2	
	0.37 - 1.9	2016	25400	2	3	
	0.36 - 1.9	2078	26200	3	2	
	0.35 - 2.1	1228	23600	3	2	**R97R57 VU11 DT90S6**
	0.31 - 1.8	1400	26900	3	2	**R107R77 VU11 DT90S6**
	0.27 - 1.6	1599	30700	3	2	
	0.25 - 1.5	1693	32500	2	3	
	0.24 - 1.4	1827	35100	3	2	
	0.23 - 1.4	1839	35300	3	2	**R137R77 VU11 DT90S6**
	0.21 - 1.2	2073	39800	3	2	
	0.19 - 1.1	2242	43000	2	3	
	0.18 - 1.0	2412	46300	3	2	
	0.17 - 1.0	2484	47700	2	3	
	0.16 - 0.95	2658	51000	3	2	
	0.15 - 0.86	2929	56200	2	3	
	0.13 - 0.76	3338	64100	2	3	
	0.12 - 0.72	3514	67500	2	3	
	0.11 - 0.67	3754	71000	3	3	**R147R77 VU11 DT90S6**
	0.10 - 0.58	4325	81800	3	3	
	0.09 - 0.51	4926	93200	3	3	
	0.08 - 0.45	5568	105300	3	3	

Please consult your SEW-Eurodrive Assembly Center for additional speed (RPM) selections and dimension pages not listed.

آتور صنعت
ATOORSANAT

6:1						
Input/Output P_n / P_{a2} HP	Speed Range n_{a1} - n_{a2} rpm	Gear Ratio *i*	Output Torque T_{a2} lb-in	Gear Stages Pri	Gear Stages Sec	Model
1.50/1.20	498 - 3045	1.30	25	1	-	
	437 - 2675	1.48	28	1	-	
	392 - 2400	1.65	32	1	-	
	337 - 2060	1.92	37	1	-	
	317 - 1940	2.04	39	1	-	
	273 - 1670	2.37	46	1	-	
	245 - 1500	2.64	51	1	-	**RX57 VU11 DT90S4**
	222 - 1360	2.91	56	1	-	
	206 - 1260	3.14	60	1	-	
	182 - 1115	3.55	68	1	-	
	171 - 1045	3.79	73	1	-	
	149 - 909	4.35	84	1	-	
	143 - 873	4.53	87	1	-	
	125 - 764	5.18	100	1	-	**RX67 VU11 DT90S4**
	121 - 739	5.35	103	1	-	
	115 - 703	5.63	108	1	-	**RX77 VU11 DT90S4**
	101 - 617	6.41	123	1	-	
	97 - 593	6.67	128	2	-	
	81 - 496	7.97	153	2	-	
	68 - 418	9.47	182	2	-	
	64 - 391	10.11	194	2	-	
	55 - 334	11.83	225	2	-	
	49 - 299	13.25	255	2	-	
	41 - 254	15.60	300	2	-	
	36 - 219	18.05	345	2	-	
	34 - 205	19.31	370	2	-	
	29 - 178	22.27	430	2	-	
	27 - 162	24.42	470	3	-	
	23 - 138	28.73	550	3	-	**R37 VU11 DT90S4**
	20 - 122	32.40	625	3	-	
	18 - 108	36.72	705	3	-	
	17 - 101	39.17	755	3	-	
	14 - 88	44.81	860	3	-	
	13 - 82	48.08	920	3	-	
	12 - 71	55.76	1070	3	-	
	11 - 65	61.18	1180	3	-	
	9.3 - 57	69.33	1330	3	-	
	8.8 - 53	73.96	1420	3	-	
	7.7 - 47	84.61	1630	3	-	
	7.1 - 44	90.77	1740	3	-	
	6.9 - 42	93.68	1800	3	-	
	6.4 - 39	100.86	1940	3	-	
	5.7 - 35	114.17	2190	3	-	**R47 VU11 DT90S4**
	5.3 - 32	121.87	2340	3	-	
	5.0 - 31	128.77	2480	3	-	**R57 VU11 DT90S4**
	4.4 - 27	147.92	2840	3	-	
	4.1 - 25	158.14	3040	3	-	**R67 VU11 DT90S4**
	3.9 - 24	166.59	3200	3	-	**R77 VU11 DT90S4**
	3.6 - 22	120.63	3530	3	-	**R57 VU11 DT90L6**
	3.4 - 20	128.77	3770	3	-	
	3.1 - 19	137.67	4030	3	-	**R67 VU11 DT90L6**
	2.7 - 16	158.14	4630	3	-	
	2.6 - 16	166.59	4870	3	-	**R77 VU11 DT90L6**

Please consult your SEW-Eurodrive Assembly Center for additional speed (RPM) selections and dimension pages not listed.

آتور صنعت ATOORSANAT

آتور صنعت ATOORSANAT SEW EURODRIVE

6:1

Input/Output P_n / P_{a2} HP	Speed Range n_{a1} - n_{a2} rpm	Gear Ratio *i*	Output Torque T_{a2} lb-in	Gear Stages Pri	Gear Stages Sec	Model
1.50/1.10	2.5 - 15	264	4780	2	2	**R67R37 VU11 DT90S4**
	2.2 - 13	294	5240	3	2	
	2.1 - 13	310	5610	2	2	**R77R37 VU11 DT90S4**
	2.0 - 12	327	5830	3	2	
	1.8 - 11	365	6600	2	2	
	1.7 - 11	373	6650	3	2	
	1.6 - 9.9	400	7240	2	2	**R87R57 VU11 DT90S4**
	1.4 - 8.4	472	8540	2	2	
	1.2 - 7.4	538	9740	2	2	
	1.1 - 6.6	599	10700	3	2	
	1.0 - 6.1	649	11600	2	3	
	0.94 - 5.8	685	12200	3	2	
	0.86 - 5.2	754	13400	2	3	
	0.79 - 4.8	824	14700	3	2	**R97R57 VU11 DT90S4**
	0.74 - 4.5	878	15600	2	3	
	0.69 - 4.2	938	16700	3	2	
	0.61 - 3.7	1069	19100	3	2	
	0.60 - 3.6	1084	19300	2	3	
	0.54 - 3.3	1207	21500	2	3	
	0.53 - 3.2	1228	21900	3	2	
	0.46 - 2.8	1396	24900	3	2	
	0.45 - 2.8	1434	25600	2	3	
	0.42 - 2.6	1550	27600	2	3	**R107R77 VU11 DT90S4**
	0.40 - 2.5	1599	28500	3	2	
	0.38 - 2.3	1693	30200	2	3	
	0.35 - 2.2	1827	32600	3	2	
	0.33 - 2.0	1987	35400	3	2	
	0.31 - 1.9	2067	36800	2	3	
	0.29 - 1.8	2242	40000	2	3	**R137R77 VU11 DT90S4**
	0.27 - 1.6	2412	43000	3	2	
	0.26 - 1.6	2484	44300	2	3	
	0.24 - 1.5	2658	47400	3	2	
	0.22 - 1.4	2929	52200	2	3	
	0.19 - 1.2	3338	59500	2	3	
	0.18 - 1.1	3514	62600	2	3	
	0.17 - 1.1	3754	65900	3	3	**R147R77 VU11 DT90S4**
	0.15 - 0.91	4325	75900	3	3	
	0.13 - 0.80	4926	86500	3	3	
	0.12 - 0.71	5568	97800	3	3	
	0.10 - 0.61	6447	113200	3	3	
2.00/1.60	498 - 3045	1.30	34	1	-	**RX57 VU11 DT90L4**
	437 - 2675	1.48	39	1	-	
	392 - 2400	1.65	43	1	-	
	337 - 2060	1.92	50	1	-	
	317 - 1940	2.04	54	1	-	
	273 - 1670	2.37	62	1	-	
	245 - 1500	2.64	69	1	-	
	222 - 1360	2.91	76	1	-	
	206 - 1260	3.14	82	1	-	
	182 - 1115	3.55	93	1	-	
	171 - 1045	3.79	100	1	-	
	149 - 909	4.35	114	1	-	
	143 - 873	4.53	119	1	-	**RX67 VU11 DT90L4**

Please consult your SEW-Eurodrive Assembly Center for additional speed (RPM) selections and dimension pages not listed.

6:1

Input/Output P_n / P_{a2} HP	Speed Range n_{a1} - n_{a2} rpm	Gear Ratio *i*	Output Torque T_{a2} lb-in	Gear Stages Pri	Gear Stages Sec	Model
2.00/1.60	125 - 764	5.18	136	1	-	**RX67 VU11 DT90L4**
	121 - 739	5.35	141	1	-	
	115 - 703	5.63	148	1	-	**RX77 VU11 DT90L4**
	101 - 617	6.41	168	1	-	
	97 - 593	6.67	175	2	-	
	81 - 496	7.97	210	2	-	
	68 - 418	9.47	250	2	-	
	64 - 391	10.11	265	2	-	
	55 - 334	11.83	310	2	-	
	49 - 299	13.25	350	2	-	
	41 - 254	15.60	410	2	-	
	36 - 219	18.05	475	2	-	**R37 VU11 DT90L4**
	34 - 205	19.31	505	2	-	
	29 - 178	22.27	585	2	-	
	27 - 162	24.42	640	3	-	
	23 - 138	28.73	755	3	-	
	20 - 122	32.40	850	3	-	
	18 - 108	36.72	960	3	-	
	17 - 101	39.17	1030	3	-	
	14 - 88	44.81	1180	3	-	
	13 - 82	48.08	1260	3	-	**R37 VU11 DT90L4**
	12 - 71	55.76	1460	3	-	
	11 - 65	61.18	1610	3	-	
	10 - 62	64.21	1690	3	-	
	9.4 - 58	68.54	1800	3	-	
	8.5 - 52	76.23	2000	3	-	**R47 VU11 DT90L4**
	7.6 - 47	84.90	2230	3	-	
	6.9 - 42	93.68	2460	3	-	
	6.6 - 40	98.00	2420	2	2	**R47R37 VU11 DT90L4**
	6.4 - 39	100.86	2650	3	-	**R47 VU11 DT90L4**
	6.1 - 37	106.58	2800	3	-	
	5.4 - 33	120.63	3170	3	-	**R57 VU11 DT90L4**
	5.0 - 31	128.77	3380	3	-	
	4.8 - 30	134.00	3310	2	2	**R57R37 VU11 DT90L4**
	4.6 - 28	142.00	3460	3	2	
	4.4 - 27	147.92	3890	3	-	**R57 VU11 DT90L4**
	4.1 - 25	159	3930	2	2	**R57R37 VU11 DT90L4**
	3.7 - 22	176	4290	3	2	
	3.6 - 22	181	4480	2	2	**R67R37 VU11 DT90L4**
	3.2 - 20	201	4970	2	2	
	2.9 - 18	221	5470	2	2	
	2.7 - 17	236	5840	2	2	
	2.5 - 15	260	6330	3	2	**R77R37 VU11 DT90L4**
	2.3 - 14	276	6830	2	2	
	2.2 - 14	289	7040	3	2	
	2.1 - 13	305	7430	3	2	
	1.8 - 11	361	8930	2	2	
	1.6 - 9.9	400	9890	2	2	**R87R57 VU11 DT90L4**
	1.4 - 8.4	472	11700	2	2	
	1.2 - 7.4	538	13300	2	2	
	1.0 - 6.3	625	15500	2	2	
	.88 - 5.4	737	18000	3	2	**R97R57 VU11 DT90L4**
	.86 - 5.2	755	18400	2	3	

Please consult your SEW-Eurodrive Assembly Center for additional speed (RPM) selections and dimension pages not listed.

آتور صنعت ATOORSANAT SEW EURODRIVE

6:1

Input/Output P_n / P_{a2} HP	Speed Range n_{a1} - n_{a2} rpm	Gear Ratio *i*	Output Torque T_{a2} lb-in	Gear Stages Pri	Gear Stages Sec	Model
2.00/1.60	.79 - 4.8	824	20100	3	2	
	.74 - 4.5	878	21400	2	3	
	.69 - 4.2	938	22800	3	2	**R97R57 VU11 DT90L4**
	.61 - 3.7	1069	26000	3	2	
	.60 - 3.6	1084	26400	2	3	
	.59 - 3.6	1104	26900	3	2	
	0.54 - 3.3	1209	29500	2	3	
	0.53 - 3.2	1226	29900	3	2	**R107R77 VU11 DT90L4**
	0.46 - 2.8	1400	34100	3	2	
	0.42 - 2.6	1550	37800	2	3	
	0.41 - 2.5	1598	38900	3	2	
	0.35 - 2.2	1839	44800	3	2	
	0.31 - 1.9	2073	50500	3	2	
	0.29 - 1.8	2242	54600	2	3	**R137R77 VU11 DT90L4**
	0.27 - 1.6	2412	58800	3	2	
	0.26 - 1.6	2484	60500	2	3	
	0.24 - 1.5	2658	64700	3	2	
	0.22 - 1.4	2898	69500	3	3	
	0.20 - 1.2	3302	79200	3	3	**R147R77 VU11 DT90L4**
	0.17 - 1.1	3754	90100	3	3	
	0.15 - 0.91	4325	103800	3	3	
	0.14 - 0.85	2898	111100	3	3	**R147R77 VU21 DT100L6**
3.00/2.50	472 - 2925	1.30	52	1	-	
	415 - 2570	1.48	59	1	-	
	372 - 2305	1.65	66	1	-	
	320 - 1980	1.92	77	1	-	
	301 - 1865	2.04	82	1	-	
	259 - 1605	2.37	95	1	-	**RX57 VU21 DT100LS4**
	232 - 1440	2.64	106	1	-	
	211 - 1305	2.91	116	1	-	
	195 - 1210	3.14	126	1	-	
	173 - 1070	3.55	142	1	-	
	162 - 1005	3.79	152	1	-	
	143 - 884	4.30	172	1	-	**RX67 VU21 DT100LS4**
	135 - 839	4.53	181	1	-	
	130 - 804	4.73	189	1	-	
	115 - 711	5.35	215	1	-	**RX77 VU21 DT100LS4**
	109 - 675	5.63	225	1	-	
	95 - 589	6.45	260	1	-	
	85 - 528	7.20	290	1	-	**RX87 VU21 DT100LS4**
	80 - 498	7.63	305	1	-	
	79 - 490	7.76	310	2	-	
	77 - 475	8.01	320	2	-	
	68 - 419	9.07	365	2	-	
	60 - 375	10.15	405	2	-	
	52 - 322	11.79	470	2	-	
	49 - 303	12.54	500	2	-	**R47 VU21 DT100LS4**
	42 - 261	14.56	585	2	-	
	38 - 234	16.22	650	2	-	
	34 - 212	17.89	715	2	-	
	32 - 197	19.27	770	2	-	
	28 - 174	21.81	870	2	-	
	26 - 163	23.28	930	2	-	

Please consult your SEW-Eurodrive Assembly Center for additional speed (RPM) selections and dimension pages not listed.

آتور صنعت ATOORSANAT

6:1

Input/Output P_n / P_{a2} HP	Speed Range n_{a1} - n_{a2} rpm	Gear Ratio *i*	Output Torque T_{a2} lb-in	Gear Stages Pri	Gear Stages Sec	Model
3.00/2.50	23 - 142	26.70	1070	3	-	
	21 - 127	29.88	1200	3	-	
	18 - 109	34.73	1390	3	-	
	17 - 103	36.93	1480	3	-	
	14 - 89	42.87	1720	3	-	**R47 VU21 DT100LS4**
	13 - 80	47.75	1910	3	-	
	12 - 72	52.69	2110	3	-	
	11 - 67	56.73	2270	3	-	
	9.6 - 59	64.21	2570	3	-	
	9.5 - 59	64.85	2590	3	-	
	8.9 - 55	69.23	2770	3	-	
	7.6 - 47	80.55	3220	3	-	**R57 VU21 DT100LS4**
	6.8 - 42	89.71	3590	3	-	
	6.2 - 38	98.99	3960	3	-	
	5.8 - 36	105.83	4230	3	-	
	5.4 - 33	113.94	4560	3	-	**R67 VU21 DT100LS4**
	4.8 - 29	128.97	5160	3	-	
	4.4 - 27	138.39	5540	3	-	**R77 VU21 DT100LS4**
	4.2 - 26	145.67	5830	3	-	
	4.0 - 24	155.34	6220	3	-	
	3.4 - 21	181.77	7270	3	-	**R87 VU21 DT100LS4**
	3.0 - 18	205.71	8230	3	-	
	2.8 - 18	216.54	8660	3	-	
	2.6 - 16	155.34	9600	3	-	**R87 VU31 DV112M6**
	2.4 - 14	170.02	10500	3	-	**R97 VU31 DV112M6**
	2.2 - 13	186.30	11500	3	-	
3.00/2.30	2.0 - 13	300	11300	2	2	**R87R57 VU21 DT100LS4**
	1.7 - 11	361	13600	2	2	
	1.6 - 10	379	14100	3	2	
	1.5 - 9.1	420	15800	2	2	
	1.4 - 8.8	431	16000	3	2	
	1.3 - 8.2	466	17600	2	2	**R97R57 VU21 DT100LS4**
	1.1 - 6.9	549	20700	2	2	
	0.98 - 6.1	625	23500	2	2	
	0.97 - 6.0	632	23400	3	2	
	0.86 - 5.3	717	26600	2	3	
	0.75 - 4.6	822	30500	3	2	**R107R77 VU21 DT100LS4**
	0.67 - 4.1	919	34100	2	3	
	0.65 - 4.0	939	34800	3	2	
	0.59 - 3.6	1043	38700	2	3	
	0.56 - 3.5	1090	40400	3	2	
	0.49 - 3.0	1256	46600	2	3	
	0.44 - 2.7	1397	51800	3	2	**R137R77 VU21 DT100LS4**
	0.39 - 2.4	1586	58800	2	3	
	0.38 - 2.4	1598	59300	3	2	
	0.33 - 2.1	1839	68200	3	2	
	0.31 - 1.9	1951	72400	3	2	
	0.28 - 1.7	2211	82000	3	2	**R147R77 VU21 DT100LS4**
	0.24 - 1.5	2555	94800	3	2	
	0.21 - 1.3	2898	105900	3	3	
	0.20 - 1.2	2085	119400	3	2	
	0.18 - 1.1	2333	133600	3	2	**R167R97 VU31 DV112M6**
	0.15 - 0.93	2657	152200	3	2	

Please consult your SEW-Eurodrive Assembly Center for additional speed (RPM) selections and dimension pages not listed.

آتور صنعت ATOORSANAT
SEW EURODRIVE

6:1

Input/Output P_n / P_{a2} HP	Speed Range n_{a1} - n_{a2} rpm	Gear Ratio *i*	Output Torque T_{a2} lb-in	Gear Stages Pri	Gear Stages Sec	Model
5.00/4.00	430 - 2555	1.42	99	1	-	**RX77 VU31 DT100L4**
	365 - 2175	1.67	117	1	-	
	325 - 1930	1.88	131	1	-	
	287 - 1705	2.13	149	1	-	
	251 - 1495	2.43	170	1	-	
	226 - 1345	2.70	189	1	-	
	198 - 1180	3.08	215	1	-	
	188 - 1115	3.25	225	1	-	
	165 - 981	3.70	260	1	-	
	151 - 898	4.04	280	1	-	
	136 - 806	4.50	315	1	-	**RX87 VU31 DT100L4**
	120 - 716	5.07	355	1	-	
	110 - 653	5.56	390	1	-	
	107 - 637	5.70	400	2	-	**R67 VU31 DT100L4**
	97 - 579	6.27	440	2	-	
	83 - 493	7.36	515	2	-	
	78 - 466	7.79	545	2	-	
	70 - 417	8.70	610	2	-	
	61 - 363	10.00	700	2	-	
	53 - 314	11.54	810	2	-	
	48 - 286	12.70	890	2	-	
	41 - 243	14.91	1040	2	-	
	39 - 230	15.79	1100	2	-	
	34 - 202	17.95	1250	2	-	
	31 - 182	19.89	1390	2	-	
	21 - 126	28.83	2010	3	-	
	19 - 112	32.27	2250	3	-	
	16 - 97	37.50	2620	3	-	
	15 - 91	39.88	2790	3	-	
	13 - 78	46.29	3230	3	-	
	12 - 70	51.56	3600	3	-	
	8.8 - 52	69.75	4870	3	-	
	8.2 - 49	74.17	5180	3	-	
	7.9 - 47	77.24	5400	3	-	**R77 VU31 DT100L4**
	7.5 - 44	81.80	5710	3	-	
	6.6 - 39	92.97	6490	3	-	
	5.9 - 35	102.99	7190	3	-	
	5.2 - 31	118.43	8270	3	-	**R87 VU31 DT100L4**
	4.9 - 29	124.97	8730	3	-	
	4.3 - 25	142.41	9950	3	-	
	3.9 - 23	155.34	10900	3	-	
	3.1 - 19	195	12800	2	2	**R87R57 VU31 DT100L4**
	2.9 - 17	209	13500	3	2	
	2.7 - 16	227	14900	2	2	**R97R57 VU31 DT100L4**
	2.6 - 16	234	15200	3	2	
	2.5 - 15	249	16100	3	2	
	2.3 - 13	270	17800	2	2	
	2.1 - 12	297	19500	2	2	**R97R57 VU31 DT100L4**
	1.8 - 11	336	21800	3	2	
	1.7 - 10	349	22900	2	2	
	1.6 - 9.8	370	24300	2	2	
	1.5 - 8.7	417	27000	3	2	**R107R77 VU31 DT100L4**
	1.4 - 8.5	426	28000	2	2	

Please consult your SEW-Eurodrive Assembly Center for additional speed (RPM) selections and dimension pages not listed.

آتور صنعت
ATOORSANAT

6:1

Input/Output P_n / P_{a2} HP	Speed Range n_{a1} - n_{a2} rpm	Gear Ratio *i*	Output Torque T_{a2} lb-in	Gear Stages Pri	Gear Stages Sec	Model
5.00/4.00	1.3 - 7.7	469	30800	2	2	
	1.2 - 7.4	492	31900	3	2	**R107R77 VU31 DT100L4**
	1.1 - 6.7	544	35200	3	2	
	1.0 - 6.0	609	39400	2	3	
	0.97 - 5.8	629	40700	3	2	
	0.87 - 5.2	699	45300	2	3	
	0.84 - 5.0	730	47300	3	2	
	0.73 - 4.4	831	53800	3	2	**R137R77 VU31 DT100L4**
	0.69 - 4.1	888	57500	2	3	
	0.64 - 3.8	951	61600	3	2	
	0.59 - 3.5	1043	67600	2	3	
	0.56 - 3.3	1090	70600	3	2	
	0.52 - 3.1	1166	75500	3	2	
	0.46 - 2.7	1329	86100	3	2	**R147R77 VU31 DT100L4**
	0.40 - 2.4	1536	99500	3	2	
	0.36 - 2.1	1705	110400	3	2	
	0.33 - 1.9	1877	121600	3	2	
	0.29 - 1.7	2085	135000	3	2	**R167R97 VU31 DT100L4**
	0.26 - 1.6	2333	151100	3	2	
7.50/6.00	433 - 2630	1.42	144	1	-	
	368 - 2240	1.67	170	1	-	
	327 - 1990	1.88	191	1	-	
	289 - 1755	2.13	215	1	-	
	253 - 1540	2.43	245	1	-	**RX77 VU31 DV132S4**
	228 - 1385	2.70	275	1	-	
	200 - 1215	3.08	315	1	-	
	189 - 1150	3.25	330	1	-	
	166 - 1010	3.70	375	1	-	
	152 - 925	4.04	410	1	-	
	137 - 830	4.50	460	1	-	
	121 - 737	5.07	515	1	-	**RX87 VU31 DV132S4**
	111 - 672	5.56	565	1	-	
	108 - 656	5.70	580	2	-	
	98 - 596	6.27	640	2	-	
	84 - 508	7.36	750	2	-	
	79 - 480	7.79	795	2	-	
	71 - 430	8.70	890	2	-	
	61 - 374	10.00	1020	2	-	
	53 - 324	11.54	1170	2	-	
	48 - 294	12.70	1290	2	-	
	41 - 251	14.91	1520	2	-	
	39 - 237	15.79	1610	2	-	**R67 VU31 DV132S4**
	34 - 208	17.95	1830	2	-	
	31 - 188	19.89	2020	2	-	
	21 - 130	28.83	2930	3	-	
	19 - 116	32.27	3280	3	-	
	16 - 100	37.50	3820	3	-	
	15 - 94	39.88	4060	3	-	
	13 - 81	46.29	4710	3	-	
	12 - 72	51.56	5250	3	-	
	11 - 65	57.68	5870	3	-	
	9.3 - 57	65.77	6690	3	-	**R77 VU31 DV132S4**

Please consult your SEW-Eurodrive Assembly Center for additional speed (RPM) selections and dimension pages not listed.

آتور صنعت ATOORSANAT

آتور صنعت ATOORSANAT SEW EURODRIVE

6:1

Input/Output P_n / P_{a2} HP	Speed Range n_{a1} - n_{a2} rpm	Gear Ratio *i*	Output Torque T_{a2} lb-in	Gear Stages Pri	Gear Stages Sec	Model
7.50/6.00	8.5 - 51	72.57	7380	3	-	**R87 VU31 DV132S4**
	7.5 - 46	81.92	8340	3	-	
	6.6 - 40	93.38	9500	3	-	
	5.9 - 36	103.65	10500	3	-	
	5.2 - 32	118.43	12100	3	-	
	4.9 - 30	124.97	12700	3	-	
	4.8 - 29	126.75	12900	3	-	**R97 VU31 DV132S4**
	4.1 - 25	150.78	15300	3	-	
	3.6 - 22	170.02	17300	3	-	
	3.3 - 20	186.30	19000	3	-	
7.50/5.60	1.9 - 11	325	31100	2	2	**R107R77 VU31 DV132S4**
	1.7 - 10	369	34800	3	2	
	1.6 - 9.9	377	36100	2	2	
	1.4 - 8.2	453	43400	2	2	**R137R77 VU31 DV132S4**
	1.3 - 7.6	490	46200	3	2	
	1.2 - 7.2	517	49500	2	2	
	1.1 - 6.6	564	54000	2	2	
	1.0 - 6.1	609	57500	2	3	
	0.98 - 5.9	629	59300	3	2	
	0.88 - 5.3	699	66000	2	3	
	0.84 - 5.1	730	68900	3	2	
	0.78 - 4.8	784	74000	3	2	**R147R77 VU31 DV132S4**
	0.69 - 4.2	889	83900	3	2	
	0.60 - 3.6	1029	97100	3	2	
	0.53 - 3.2	1166	110000	3	2	
	0.48 - 2.9	1279	120700	3	2	**R167R97 VU31 DV132S4**
	0.43 - 2.6	1438	135700	3	2	
	0.37 - 2.2	1670	157600	3	2	
10.00/8.30	435 - 2655	1.39	197	1	-	**RX87 VU41 DV132M4**
	378 - 2305	1.60	225	1	-	
	314 - 1910	1.93	275	1	-	
	281 - 1715	2.15	305	1	-	
	244 - 1485	2.48	350	1	-	
	219 - 1335	2.76	390	1	-	
	196 - 1195	3.09	440	1	-	**RX87 VU41 DV132M4**
	174 - 1060	3.48	495	1	-	
	160 - 976	3.78	535	1	-	
	134 - 820	4.50	640	1	-	
	123 - 751	4.91	695	1	-	**RX97 VU41 DV132M4**
	105 - 637	5.79	820	1	-	
	91 - 556	6.63	940	1	-	**RX107 VU41 DV132M4**
	89 - 543	6.79	960	2	-	**R77 VU41 DV132M4**
	78 - 477	7.74	1100	2	-	
	70 - 429	8.59	1220	2	-	
	63 - 383	9.64	1370	2	-	
	56 - 339	10.88	1550	2	-	
	49 - 299	12.33	1750	2	-	
	43 - 263	14.05	2000	2	-	
	39 - 236	15.60	2220	2	-	
	34 - 207	17.82	2530	2	-	
	32 - 196	18.80	2670	2	-	
	24 - 146	25.23	3580	3	-	
	21 - 127	29.00	4120	3	-	

Please consult your SEW-Eurodrive Assembly Center for additional speed (RPM) selections and dimension pages not listed.

آتور صنعت
ATOORSANAT

6:1

Input/Output P_n / P_{a2} HP	Speed Range n_{a1} - n_{a2} rpm	Gear Ratio *i*	Output Torque T_{a2} lb-in	Gear Stages Pri	Gear Stages Sec	Model
10.00/8.30	18 - 110	33.47	4750	3	-	
	16 - 100	36.83	5230	3	-	**R77 VU41 DV132M4**
	14 - 85	43.26	6140	3	-	
	13 - 81	45.81	6510	3	-	
	11 - 70	52.82	7500	3	-	
	10 - 61	60.35	8570	3	-	
	9.5 - 58	63.68	9040	3	-	**R87 VU41 DV132M4**
	7.4 - 45	81.92	11600	3	-	
	6.5 - 40	93.38	13300	3	-	
	5.8 - 36	103.44	14700	3	-	
	5.2 - 32	116.48	16500	3	-	**R97 VU41 DV132M4**
	4.8 - 29	126.75	18000	3	-	
	4.0 - 24	150.78	21400	3	-	
	3.8 - 23	158.68	22500	3	-	
	3.5 - 21	172.34	24500	3	-	**R107 VU41 DV132M4**
	3.0 - 18	203.16	28900	3	-	
10.00/7.80	2.1 - 13	284	38000	2	2	**R107R77 VU41 DV132M4**
	2.0 - 12	297	39700	2	2	
	1.9 - 11	323	42500	3	2	
	1.8 - 11	339	45300	2	2	
	1.6 - 9.8	376	50300	2	2	**R137R77 VU41 DV132M4**
	1.4 - 8.6	428	56400	3	2	
	1.3 - 8.1	453	60600	2	2	
	1.2 - 7.5	490	64500	3	2	
	1.1 - 6.6	558	73500	3	2	
	.98 - 6.0	619	81500	3	2	**R147R77 VU41 DV132M4**
	.87 - 5.3	695	91500	3	2	
	.77 - 4.7	784	103200	3	2	
	.70 - 4.3	861	113400	3	2	
	.61 - 3.7	999	131600	3	2	**R167R97 VU41 DV132M4**
	.54 - 3.3	1123	147900	3	2	
	.53 - 3.2	760	150100	3	2	
15.00/12.10	435 - 2655	1.39	285	1	-	
	378 - 2305	1.60	330	1	-	
	314 - 1910	1.93	400	1	-	
	281 - 1715	2.15	445	1	-	
	244 - 1485	2.48	510	1	-	**RX87 VU41 DV160M4**
	219 - 1335	2.76	570	1	-	
	196 - 1195	3.09	635	1	-	
	174 - 1060	3.48	715	1	-	
	160 - 976	3.78	780	1	-	
	134 - 820	4.50	930	1	-	
	123 - 751	4.91	1010	1	-	**RX97 VU41 DV160M4**
	105 - 637	5.79	1190	1	-	
	91 - 556	6.63	1370	1	-	**RX107 VU41 DV160M4**
	89 - 543	6.79	1400	2	-	
	78 - 477	7.74	1600	2	-	
	70 - 429	8.59	1770	2	-	
	63 - 383	9.64	1990	2	-	**R77 VU41 DV160M4**
	56 - 339	10.88	2240	2	-	
	49 - 299	12.33	2540	2	-	
	43 - 263	14.05	2900	2	-	
	39 - 236	15.60	3220	2	-	

Please consult your SEW-Eurodrive Assembly Center for additional speed (RPM) selections and dimension pages not listed.

آتور صنعت ATOORSANAT SEW EURODRIVE

6:1

Input/Output P_n / P_{a2} HP	Speed Range n_{a1} - n_{a2} rpm	Gear Ratio *i*	Output Torque T_{a2} lb-in	Gear Stages Pri	Gear Stages Sec	Model
15.00/12.10	34 - 207	17.82	3670	2	-	
	32 - 196	18.80	3880	2	-	
	24 - 146	25.23	5200	3	-	**R77 VU41 DV160M4**
	21 - 127	29.00	5980	3	-	
	18 - 110	33.47	6900	3	-	
	16 - 100	36.84	7590	3	-	
	14 - 88	41.74	8610	3	-	
	13 - 78	47.58	9810	3	-	**R87 VU41 DV160M4**
	11 - 70	52.82	10900	3	-	
	10 - 61	60.35	12400	3	-	
	9.5 - 58	63.68	13100	3	-	
	9.3 - 57	65.21	13400	3	-	
	8.4 - 51	72.17	14900	3	-	**R97 VU41 DV160M4**
	7.3 - 44	83.15	17100	3	-	
	6.5 - 40	92.48	19100	3	-	
	5.8 - 36	103.44	21300	3	-	
	5.2 - 32	116.48	24000	3	-	**R97 VU41 DV160M4**
	4.8 - 29	126.75	26100	3	-	
	4.7 - 29	127.68	26300	3	-	
	4.3 - 26	141.83	29200	3	-	**R107 VU41 DV160M4**
	3.8 - 23	158.68	32700	3	-	
	3.5 - 21	172.34	35500	3	-	
15.00/11.30	2.1 - 13	291	55600	3	2	
	2.0 - 12	297	57600	2	2	**R137R77 VU41 DV160M4**
	1.9 - 11	323	61700	3	2	
	1.8 - 11	339	65800	2	2	
	1.6 - 10	368	70300	3	2	**R147R87 VU41 DV160M4**
	1.5 - 8.9	415	79300	3	2	**R147R77 VU41 DV160M4**
	1.4 - 8.7	426	81400	3	2	**R147R87 VU41 DV160M4**
	1.3 - 8.0	462	88300	3	2	
	1.2 - 7.5	489	93500	3	2	**R147R77 VU41 DV160M4**
	1.1 - 6.6	558	106700	3	2	
	1.0 - 6.4	579	110700	3	2	
	.92 - 5.6	656	125400	3	2	**R167R97 VU41 DV160M4**
	.80 - 4.9	760	145300	3	2	
20.00/16.50	435 - 2630	1.42	395	1	-	
	376 - 2275	1.64	455	1	-	
	315 - 1905	1.96	545	1	-	
	276 - 1665	2.24	625	1	-	
	234 - 1415	2.64	735	1	-	**RX97 VU51 DV160L4**
	211 - 1280	2.92	810	1	-	
	187 - 1130	3.30	920	1	-	
	170 - 1025	3.64	1010	1	-	
	153 - 924	4.04	1130	1	-	
	137 - 825	4.52	1260	1	-	
	133 - 802	4.65	1300	1	-	**RX107 VU51 DV160L4**
	119 - 719	5.19	1450	1	-	
	116 - 704	5.30	1480	2	-	
	97 - 584	6.39	1780	2	-	
	87 - 523	7.13	1990	2	-	**R87 VU51 DV160L4**
	75 - 454	8.22	2290	2	-	
	68 - 408	9.14	2550	2	-	
	62 - 377	9.90	2760	2	-	

Please consult your SEW-Eurodrive Assembly Center for additional speed (RPM) selections and dimension pages not listed.

آتور صنعت ATOORSANAT

6:1

Input/Output P_n / P_{a2} HP	Speed Range n_{a1} - n_{a2} rpm	Gear Ratio *i*	Output Torque T_{a2} lb-in	Gear Stages Pri	Gear Stages Sec	Model
20.00/16.50	52 - 313	11.93	3320	2	-	
	46 - 280	13.33	3710	2	-	
	40 - 243	15.35	4280	2	-	
	36 - 218	17.08	4760	2	-	
	32 - 195	19.10	5320	2	-	
	29 - 173	21.51	5990	2	-	**R87 VU51 DV160L4**
	22 - 134	27.88	7770	3	-	
	19 - 114	32.66	9100	3	-	
	17 - 101	36.84	10300	3	-	
	15 - 89	41.74	11600	3	-	
	13 - 78	47.58	13300	3	-	
	12 - 70	53.21	14800	3	-	
	10 - 62	59.92	16700	3	-	
	8.6 - 52	72.17	20100	3	-	**R97 VU51 DV160L4**
	7.4 - 45	83.15	23200	3	-	
	6.7 - 40	92.48	25800	3	-	
	6.0 - 36	102.53	28600	3	-	
	5.3 - 32	115.63	32200	3	-	**R107 VU51 DV160L4**
	4.8 - 29	127.68	35600	3	-	
	4.4 - 26	141.12	39300	3	-	
	3.9 - 24	156.31	43500	3	-	**R137 VU51 DV160L4**
	3.5 - 21	174.40	48600	3	-	
20.00/15.30	2.2 - 13	280	72300	3	2	
	1.9 - 11	326	84200	3	2	**R147R87 VU51 DV160L4**
	1.7 - 10	368	95000	3	2	
	1.4 - 8.8	426	110000	3	2	
	1.2 - 7.4	503	129900	3	2	**R167R97 VU51 DV160L4**
	1.1 - 6.4	579	149500	3	2	
25.00/20.00	435 - 2630	1.42	490	1	-	
	376 - 2275	1.64	565	1	-	
	315 - 1905	1.96	675	1	-	
	276 - 1665	2.24	770	1	-	
	234 - 1415	2.64	910	1	-	**RX97 VU51 DV180M4**
	211 - 1280	2.92	1010	1	-	
	187 - 1130	3.30	1140	1	-	
	170 - 1025	3.64	1250	1	-	
	153 - 924	4.04	1390	1	-	
	137 - 825	4.52	1560	1	-	
	133 - 802	4.65	1600	1	-	**RX107 VU51 DV180M4**
	119 - 719	5.19	1790	1	-	
	116 - 704	5.30	1820	2	-	
	97 - 584	6.39	2200	2	-	
	87 - 523	7.13	2450	2	-	
	75 - 454	8.22	2830	2	-	
	68 - 408	9.14	3150	2	-	
	62 - 377	9.90	3410	2	-	
	52 - 313	11.93	4110	2	-	**R87 VU51 DV180M4**
	46 - 280	13.33	4590	2	-	
	40 - 243	15.35	5280	2	-	
	36 - 218	17.08	5880	2	-	
	32 - 195	19.10	6570	2	-	
	29 - 173	21.51	7400	2	-	
	22 - 134	27.88	9600	3	-	

Please consult your SEW-Eurodrive Assembly Center for additional speed (RPM) selections and dimension pages not listed.

آتور صنعت ATOORSANAT
SEW EURODRIVE

6:1

Input/Output P_n / P_{a2} HP	Speed Range n_{a1} - n_{a2} rpm	Gear Ratio *i*	Output Torque T_{a2} lb-in	Gear Stages Pri	Gear Stages Sec	Model
25.00/20.00	19 - 114	32.66	11200	3	-	**R87 VU51 DV180M4**
	17 - 101	36.84	12700	3	-	
	14 - 87	42.78	14700	3	-	**R97 VU51 DV180M4**
	13 - 78	47.58	16400	3	-	
	12 - 70	53.21	18300	3	-	
	10 - 62	59.92	20600	3	-	
	8.6 - 52	72.17	24800	3	-	
	8.5 - 51	72.88	25100	3	-	**R107 VU51 DV180M4**
	7.9 - 47	78.57	27000	3	-	
	6.7 - 40	92.70	31900	3	-	
	6.0 - 36	102.53	35300	3	-	
	5.4 - 33	113.72	39100	3	-	**R137 VU51 DV180M4**
	4.8 - 29	128.18	44100	3	-	
	4.4 - 26	141.12	48600	3	-	
	3.9 - 24	156.31	53800	3	-	
	3.5 - 21	174.40	60000	3	-	
25.00/19.00	3.3 - 20	189	60300	3	2	**R147R87 VU51 DV180M4**
	2.9 - 17	214	68300	3	2	
	2.5 - 15	247	78800	3	2	
	2.2 - 13	280	89400	3	2	
	1.9 - 11	326	104100	3	2	
	1.8 - 11	335	106900	3	2	**R167R97 VU51 DV180M4**
	1.6 - 9.9	376	120000	3	2	
	1.4 - 8.6	432	137900	3	2	
30.00/24.00	435 - 2630	1.42	580	1	-	**RX97 VU51 DV180L4**
	376 - 2275	1.64	670	1	-	
	315 - 1905	1.96	800	1	-	
	276 - 1665	2.24	910	1	-	
	234 - 1415	2.64	1080	1	-	
	211 - 1280	2.92	1190	1	-	
	187 - 1130	3.30	1350	1	-	
	170 - 1025	3.64	1480	1	-	
	153 - 924	4.04	1650	1	-	
	137 - 825	4.52	1840	1	-	
	133 - 802	4.65	1900	1	-	**RX107 VU51 DV180L4**
	119 - 719	5.19	2120	1	-	
	116 - 704	5.30	2160	2	-	**R87 VU51 DV180L4**
	97 - 584	6.39	2600	2	-	
	87 - 523	7.13	2910	2	-	
	75 - 454	8.22	3350	2	-	
	68 - 408	9.14	3730	2	-	
	62 - 377	9.90	4040	2	-	
	52 - 313	11.93	4860	2	-	
	46 - 280	13.33	5430	2	-	
	40 - 243	15.35	6260	2	-	
	36 - 218	17.08	6960	2	-	
	32 - 195	19.10	7790	2	-	
	29 - 173	21.51	8770	2	-	
	22 - 134	27.88	11400	3	-	
	19 - 114	32.66	13300	3	-	
	17 - 100	37.13	15100	3	-	**R97 VU51 DV180L4**
	14 - 87	42.78	17400	3	-	
	13 - 78	47.58	19400	3	-	

Please consult your SEW-Eurodrive Assembly Center for additional speed (RPM) selections and dimension pages not listed.

آتور صنعت ATOORSANAT

6:1

Input/Output P_n / P_{a2} HP	Speed Range n_{a1} - n_{a2} rpm	Gear Ratio *i*	Output Torque T_{a2} lb-in	Gear Stages Pri	Gear Stages Sec	Model
30.00/24.00	12 - 70	53.21	21700	3	-	**R97 VU51 DV180L4**
	10 - 62	59.92	24400	3	-	
	9.4 - 57	65.60	26700	3	-	**R107 VU51 DV180L4**
	8.5 - 51	72.88	29700	3	-	
	7.9 - 47	78.57	32000	3	-	
	6.7 - 40	92.70	37800	3	-	
	6.0 - 36	103.20	42100	3	-	**R137 VU51 DV180L4**
	5.4 - 33	113.72	46400	3	-	
	4.8 - 29	128.18	52300	3	-	
	4.4 - 26	141.12	57500	3	-	
	3.9 - 24	156.31	63700	3	-	
	3.8 - 23	163.31	66600	3	-	**R147 VU51 DV180L4**
30.00/23.00	3.3 - 20	189	71400	3	2	**R147R87 VU51 DV180L4**
	2.9 - 17	214	80900	3	2	
	2.5 - 15	247	93400	3	2	
	2.2 - 13	280	105800	3	2	
	2.1 - 13	295	111500	3	2	**R167R107 VU51 DV180L4**
	2.0 - 12	303	114500	3	2	**R167R97 VU51 DV180L4**
	1.8 - 11	335	126600	3	2	
	1.6 - 9.9	376	142100	3	2	

4:1

Input/Output P_n / P_{a2} HP	Speed Range n_{a1} - n_{a2} rpm	Gear Ratio *i*	Output Torque T_{a2} lb-in	Gear Stages Pri	Gear Stages Sec	Model
40.00/34.00	134 - 615	4.92	3430	2	-	**R107 VU6 DV200L4**
	113 - 520	5.82	4060	2	-	
	99 - 455	6.66	4650	2	-	
	84 - 385	7.86	5480	2	-	
	77 - 354	8.56	5970	2	-	
	65 - 299	10.13	7070	2	-	
	57 - 261	11.59	8090	2	-	
	48 - 222	13.66	9530	2	-	
	42 - 193	15.65	10900	2	-	
	36 - 166	18.21	12700	2	-	
	33 - 151	20.07	14000	2	-	
	29 - 134	22.62	15800	2	-	
	26 - 122	24.90	17400	2	-	
	22 - 103	29.49	20600	3	-	
	19 - 86	35.26	24600	3	-	
	16 - 75	40.37	28200	3	-	
	14 - 64	47.63	33200	3	-	
	12 - 57	52.68	36800	3	-	
	11 - 51	59.17	41300	3	-	**R137 VU6 DV200L4**
	10 - 46	65.20	45500	3	-	
	9.0 - 41	73.49	51300	3	-	
	8.1 - 37	80.91	56500	3	-	
	7.4 - 34	88.70	61900	3	-	
	7.0 - 32	94.60	66000	3	-	**R147 VU6 DV200L4**
	6.0 - 28	109.31	76300	3	-	
	5.5 - 25	119.86	83600	3	-	
	4.5 - 21	146.91	102500	3	-	

Please consult your SEW-Eurodrive Assembly Center for additional speed (RPM) selections and dimension pages not listed.

آتور صنعت ATOORSANAT
SEW EURODRIVE

4:1

Input/Output P_n / P_{a2} HP	Speed Range n_{a1} - n_{a2} rpm	Gear Ratio *i*	Output Torque T_{a2} lb-in	Gear Stages Pri	Gear Stages Sec	Model
40.00/34.00	4.3 - 20	153.07	106800	3	-	**R167 VU6 DV200L4**
	3.5 - 16	186.93	130400	3	-	
40.00/31.00	3.3 - 15	200	129400	3	2	**R167R107 VU6 DV200L4**
	2.9 - 13	229	148200	3	2	

3:1

Input/Output P_n / P_{a2} HP	Speed Range n_{a1} - n_{a2} rpm	Gear Ratio *i*	Output Torque T_{a2} lb-in	Gear Stages Pri	Gear Stages Sec	Model
50.00/40.00	168 - 508	4.92	4990	2	-	
	142 - 429	5.82	5900	2	-	
	124 - 375	6.66	6760	2	-	
	105 - 318	7.86	7970	2	-	
	96 - 292	8.56	8680	2	-	
	81 - 247	10.13	10300	2	-	
	71 - 216	11.59	11800	2	-	
	60 - 183	13.66	13900	2	-	**R107 VU6 DV225S4**
	53 - 160	15.65	15900	2	-	
	45 - 137	18.21	18500	2	-	
	41 - 125	20.07	20400	2	-	
	36 - 110	22.62	22900	2	-	
	33 - 100	24.90	25300	2	-	
	28 - 85	29.49	29900	3	-	
	23 - 71	35.26	35800	3	-	
	22 - 66	37.65	38200	3	-	
	19 - 56	44.39	45000	3	-	
	16 - 49	50.86	51600	3	-	**R137 VU6 DV225S4**
	14 - 42	59.17	60000	3	-	
	13 - 38	65.20	66100	3	-	
	12 - 37	66.99	67900	3	-	
	11 - 35	72.09	73100	3	-	
	9.9 - 30	83.47	84700	3	-	**R147 VU6 DV225S4**
	8.7 - 26	94.60	96000	3	-	
	7.5 - 23	109.31	110900	3	-	
	6.8 - 21	121.81	123600	3	-	
	5.9 - 18	139.98	142000	3	-	**R167 VU6 DV225S4**
	5.4 - 16	153.07	155300	3	-	
50.00/36.00	4.9 - 15	169	158900	3	2	**R167R107 VU6 DV225S4**
60.00/50.00	168 - 508	4.92	6150	2	-	
	142 - 429	5.82	7280	2	-	
	124 - 375	6.66	8330	2	-	
	105 - 318	7.86	9830	2	-	
	96 - 292	8.56	10700	2	-	
	81 - 247	10.13	12700	2	-	
	71 - 216	11.59	14500	2	-	**R107 VU6 DV225M4**
	60 - 183	13.66	17100	2	-	
	53 - 160	15.65	19600	2	-	
	45 - 137	18.21	22800	2	-	
	41 - 125	20.07	25100	2	-	
	36 - 110	22.62	28300	2	-	
	33 - 100	24.90	31100	2	-	
	28 - 85	29.49	36900	3	-	

Please consult your SEW-Eurodrive Assembly Center for additional speed (RPM) selections and dimension pages not listed.

آتور صنعت ATOORSANAT

3:1

Input/Output P_n / P_{a2} HP	Speed Range n_{a1} - n_{a2} rpm	Gear Ratio *i*	Output Torque T_{a2} lb-in	Gear Stages Pri	Gear Stages Sec	Model
60.00/50.00	25 - 76	32.91	41200	3	-	R137 VU6 DV225M4
	22 - 66	37.65	47100	3	-	
	19 - 56	44.39	55500	3	-	
	16 - 49	50.86	63600	3	-	
	14 - 41	61.09	76400	3	-	R147 VU6 DV225M4
	12 - 37	66.99	83800	3	-	
	11 - 35	72.09	90200	3	-	
	9.9 - 30	83.47	104400	3	-	
	8.9 - 27	93.19	116600	3	-	R167 VU6 DV225M4
	7.7 - 23	107.49	134500	3	-	
	6.8 - 21	121.81	152400	3	-	

7:1

Input/Output P_n / P_{a2} HP	Speed Range n_{a1} - n_{a2} rpm	Gear Ratio *i*	Output Torque T_{a2} lb-in	Gear Stages Pri	Gear Stages Sec	Model
1.00/0.83	331 - 2325	1.30	23	1	-	RX57 VU11 DT90S6
	291 - 2045	1.48	26	1	-	
	261 - 1835	1.65	29	1	-	
	224 - 1575	1.92	33	1	-	
	211 - 1485	2.04	35	1	-	
	182 - 1275	2.37	41	1	-	
	163 - 1145	2.64	46	1	-	
	148 - 1040	2.91	50	1	-	
	137 - 963	3.14	54	1	-	
	121 - 852	3.55	61	1	-	
	114 - 798	3.79	66	1	-	
	99 - 695	4.35	75	1	-	
	95 - 668	4.53	78	1	-	RX67 VU11 DT90S6
	83 - 584	5.18	90	1	-	
	80 - 565	5.35	93	1	-	RX77 VU11 DT90S6
	76 - 537	5.63	98	1	-	
	67 - 472	6.41	111	1	-	
	65 - 454	6.67	116	2	-	R37 VU11 DT90S6
	54 - 380	7.97	138	2	-	
	45 - 319	9.47	164	2	-	
	43 - 299	10.11	175	2	-	
	36 - 256	11.83	205	2	-	
	32 - 228	13.25	230	2	-	
	28 - 194	15.60	270	2	-	
	24 - 168	18.05	315	2	-	
	22 - 157	19.31	335	2	-	
	19 - 136	22.27	385	2	-	
	18 - 124	24.42	425	3	-	
	15 - 105	28.73	500	3	-	
	13 - 93	32.40	560	3	-	
	12 - 82	36.72	635	3	-	
	11 - 77	39.17	680	3	-	
	9.6 - 68	44.81	775	3	-	
	8.9 - 63	48.08	830	3	-	
	7.7 - 54	55.76	970	3	-	
	7.0 - 49	61.18	1060	3	-	
	6.2 - 44	69.33	1200	3	-	

Please consult your SEW-Eurodrive Assembly Center for additional speed (RPM) selections and dimension pages not listed.

آتور صنعت ATOORSANAT

آتور صنعت ATOORSANAT SEW EURODRIVE

7:1

Input/Output P_n / P_{a2} HP	Speed Range n_{a1} - n_{a2} rpm	Gear Ratio *i*	Output Torque T_{a2} lb-in	Gear Stages Pri	Gear Stages Sec	Model
1.00/0.83	5.8 - 41	73.96	1280	3	-	
	5.1 - 36	84.61	1470	3	-	**R37 VU11 DT90S6**
	4.7 - 33	90.77	1570	3	-	
	4.6 - 32	93.68	1620	3	-	
	4.3 - 30	100.86	1750	3	-	
	3.8 - 26	114.17	1980	3	-	**R47 VU11 DT90S6**
	3.5 - 25	121.87	2110	3	-	
	3.1 - 22	139.99	2420	3	-	
	2.9 - 20	147.92	2560	3	-	**R57 VU11 DT90S6**
	2.7 - 19	158.14	2740	3	-	**R67 VU11 DT90S6**
	2.6 - 18	166.59	2890	3	-	**R77 VU11 DT90S6**
1.00/0.78	2.3 - 16	188	3060	2	2	
	2.0 - 14	220	3590	2	2	**R57R37 VU11 DT90S6**
	1.8 - 13	241	3870	3	2	
	1.6 - 11	264	4300	2	2	
	1.5 - 10	294	4720	3	2	**R67R37 VU11 DT90S6**
	1.4 - 9.8	310	5050	2	2	
	1.3 - 9.3	327	5250	3	2	
	1.2 - 8.3	365	5950	2	2	**R77R37 VU11 DT90S6**
	1.0 - 7.2	422	6880	2	2	
	0.99 - 6.9	436	7000	3	2	
	0.94 - 6.6	456	7320	3	2	
	0.91 - 6.4	472	7690	2	2	
	0.82 - 5.8	525	8430	3	2	
	0.80 - 5.6	538	8770	2	2	
	0.74 - 5.2	580	9310	2	3	
	0.72 - 5.1	599	9620	3	2	**R87R57 VU11 DT90S6**
	0.66 - 4.7	649	10400	2	3	
	0.63 - 4.4	685	11000	3	2	
	0.57 - 4.0	754	12100	2	3	
	0.55 - 3.9	776	12500	3	2	
	0.54 - 3.8	802	12900	2	3	
	0.52 - 3.7	824	13200	3	2	
	0.49 - 3.4	878	14100	2	3	
	0.46 - 3.2	938	15100	3	2	
	0.40 - 2.8	1069	17200	3	2	
	0.36 - 2.5	1207	19400	2	3	**R97R57 VU11 DT90S6**
	0.35 - 2.5	1228	19700	3	2	
	0.31 - 2.2	1396	22400	3	2	
	0.30 - 2.1	1434	23000	2	3	
	0.27 - 1.9	1583	25400	3	2	
	0.25 - 1.8	1693	27200	2	3	
	0.24 - 1.7	1827	29300	3	2	
	0.22 - 1.5	1987	31900	3	2	**R107R77 VU11 DT90S6**
	0.21 - 1.5	2067	33200	2	3	
	0.19 - 1.3	2280	36600	2	3	
	0.18 - 1.3	2412	38700	3	2	
	0.17 - 1.2	2484	39900	2	3	
	0.16 - 1.1	2658	42700	3	2	
	0.15 - 1.0	2929	47000	2	3	**R137R77 VU11 DT90S6**
	0.13 - 0.91	3338	53600	2	3	
	0.12 - 0.86	3514	56400	2	3	
	0.11 - 0.75	4018	64500	2	3	

Please consult your SEW-Eurodrive Assembly Center for additional speed (RPM) selections and dimension pages not listed.

7:1						
Input/Output P_n / P_{a2} HP	Speed Range n_{a1} - n_{a2} rpm	Gear Ratio *i*	Output Torque T_{a2} lb-in	Gear Stages Pri	Gear Stages Sec	Model
1.00/0.78	0.10 - 0.70	4325	68400	3	3	
	0.09 - 0.61	4926	77900	3	3	**R147R77 VU11 DT90S6**
	0.08 - 0.54	5568	88100	3	3	
1.50/1.20	332 - 2390	1.30	32	1	-	
	292 - 2100	1.48	36	1	-	
	262 - 1885	1.65	40	1	-	
	225 - 1620	1.92	47	1	-	
	212 - 1525	2.04	50	1	-	
	182 - 1310	2.37	58	1	-	
	164 - 1175	2.64	65	1	-	**RX57 VU11 DT90L6**
	148 - 1070	2.91	71	1	-	
	138 - 990	3.14	77	1	-	
	122 - 875	3.55	87	1	-	
	114 - 820	3.79	93	1	-	
	99 - 714	4.35	106	1	-	
	95 - 686	4.53	111	1	-	
	83 - 600	5.18	127	1	-	**RX67 VU11 DT90L6**
	81 - 581	5.35	131	1	-	
	77 - 552	5.63	138	1	-	**RX77 VU11 DT90L6**
	67 - 485	6.41	157	1	-	
	65 - 466	6.67	163	2	-	
	54 - 390	7.97	195	2	-	
	46 - 328	9.47	230	2	-	
	43 - 307	10.11	245	2	-	
	37 - 263	11.83	290	2	-	
	33 - 235	13.25	325	2	-	
	28 - 199	15.60	380	2	-	
	24 - 172	18.05	440	2	-	
	22 - 161	19.31	475	2	-	
	19 - 140	22.27	545	2	-	
	18 - 127	24.42	600	3	-	**R37 VU11 DT90L6**
	15 - 108	28.73	705	3	-	
	13 - 96	32.40	795	3	-	
	12 - 85	36.72	900	3	-	
	11 - 79	39.17	960	3	-	
	9.6 - 69	44.81	1100	3	-	
	9.0 - 65	48.08	1180	3	-	
	7.7 - 56	55.76	1360	3	-	
	7.1 - 51	61.18	1500	3	-	
	6.2 - 45	69.33	1700	3	-	
	5.7 - 41	76.23	1870	3	-	
	5.1 - 37	84.90	2080	3	-	
	4.6 - 33	93.68	2290	3	-	**R47 VU11 DT90L6**
	4.3 - 31	100.86	2470	3	-	
	4.1 - 29	106.58	2610	3	-	
	3.6 - 26	120.63	2950	3	-	
	3.4 - 24	128.77	3150	3	-	**R57 VU11 DT90L6**
	2.9 - 21	147.92	3620	3	-	
	2.7 - 20	158.14	3870	3	-	**R67 VU11 DT90L6**
	2.6 - 19	166.59	4080	3	-	
	0.07 - 0.47	6447	102000	3	3	**R77 VU11 DT90L6**
1.50/1.10	2.5 - 18	176	3990	3	2	
	2.4 - 17	181	4170	2	2	**R67R37 VU11 DT90L6**

Please consult your SEW-Eurodrive Assembly Center for additional speed (RPM) selections and dimension pages not listed.

آتور صنعت ATOORSANAT

آتور صنعت ATOORSANAT SEW EURODRIVE

7:1

Input/Output P_n / P_{a2} HP	Speed Range n_{a1} - n_{a2} rpm	Gear Ratio *i*	Output Torque T_{a2} lb-in	Gear Stages Pri	Gear Stages Sec	Model
1.50/1.10	2.2 - 16	200	4540	3	2	
	2.1 - 15	201	4630	2	2	**R67R37 VU11 DT90L6**
	1.8 - 13	234	5310	3	2	
	1.7 - 12	260	5900	3	2	
	1.6 - 11	276	6360	2	2	**R77R37 VU11 DT90L6**
	1.5 - 11	289	6560	3	2	
	1.4 - 10	310	7140	2	2	
	1.2 - 8.6	361	8320	2	2	
	1.1 - 7.8	400	9210	2	2	
	0.95 - 6.8	456	10300	3	2	
	0.92 - 6.6	472	10900	2	2	**R87R57 VU11 DT90L6**
	0.82 - 5.9	525	11900	3	2	
	0.80 - 5.8	538	12400	2	2	
	0.75 - 5.4	580	13200	2	3	
	0.72 - 5.2	599	13600	3	2	
	0.69 - 5.0	625	14400	2	2	
	0.68 - 4.9	632	14300	3	2	
	0.59 - 4.2	737	16700	3	2	
	0.57 - 4.1	755	17100	2	3	**R97R57 VU11 DT90L6**
	0.52 - 3.8	824	18700	3	2	
	0.49 - 3.5	878	19900	2	3	
	0.46 - 3.3	938	21300	3	2	
	0.40 - 2.9	1069	24300	3	2	
	0.39 - 2.8	1104	25100	3	2	
	0.36 - 2.6	1209	27400	2	3	
	0.35 - 2.5	1226	27800	3	2	**R107R77 VU11 DT90L6**
	0.31 - 2.2	1400	31800	3	2	
	0.28 - 2.0	1550	35200	2	3	
	0.27 - 1.9	1599	36300	3	2	
	0.23 - 1.7	1839	41700	3	2	
	0.21 - 1.5	2073	47000	3	2	
	0.19 - 1.4	2242	50900	2	3	
	0.18 - 1.3	2412	54700	3	2	**R137R77 VU11 DT90L6**
	0.17 - 1.3	2484	56400	2	3	
	0.16 - 1.2	2658	60300	3	2	
	0.15 - 1.1	2929	66500	2	3	
	0.13 - 0.94	3302	73800	3	3	
	0.12 - 0.83	3754	83900	3	3	**R147R77 VU11 DT90L6**
	0.10 - 0.72	4325	96700	3	3	
	0.09 - 0.63	4926	110100	3	3	

8:1

Input/Output P_n / P_{a2} HP	Speed Range n_{a1} - n_{a2} rpm	Gear Ratio *i*	Output Torque T_{a2} lb-in	Gear Stages Pri	Gear Stages Sec	Model
2.00/1.60	315 - 2465	1.30	42	1	-	
	276 - 2165	1.48	48	1	-	
	248 - 1940	1.65	54	1	-	
	213 - 1670	1.92	62	1	-	
	201 - 1570	2.04	66	1	-	**RX57 VU21 DT100L6**
	173 - 1350	2.37	77	1	-	
	155 - 1215	2.64	86	1	-	
	141 - 1100	2.91	94	1	-	

Please consult your SEW-Eurodrive Assembly Center for additional speed (RPM) selections and dimension pages not listed.

8:1

Input/Output P_n / P_{a2} HP	Speed Range n_{a1} - n_{a2} rpm	Gear Ratio *i*	Output Torque T_{a2} lb-in	Gear Stages Pri	Gear Stages Sec	Model
2.00/1.60	130 - 1020	3.14	102	1	-	
	115 - 902	3.55	115	1	-	**RX57 VU21 DT100L6**
	108 - 845	3.79	123	1	-	
	95 - 745	4.30	140	1	-	**RX67 VU21 DT100L6**
	90 - 707	4.53	147	1	-	
	87 - 677	4.73	153	1	-	
	76 - 599	5.35	174	1	-	**RX77 VU21 DT100L6**
	73 - 569	5.63	183	1	-	
	63 - 497	6.45	210	1	-	
	57 - 445	7.20	235	1	-	**RX87 VU21 DT100L6**
	54 - 420	7.63	250	1	-	
	53 - 413	7.76	250	2	-	
	51 - 400	8.01	260	2	-	
	45 - 353	9.07	295	2	-	
	40 - 316	10.15	330	2	-	
	35 - 272	11.79	385	2	-	
	33 - 255	12.54	405	2	-	
	28 - 220	14.56	470	2	-	
	25 - 197	16.22	525	2	-	
	23 - 179	17.89	580	2	-	
	21 - 166	19.27	625	2	-	
	19 - 147	21.81	710	2	-	
	18 - 138	23.28	755	2	-	
	17 - 136	23.59	765	3	-	**R47 VU21 DT100L6**
	15 - 120	26.70	870	3	-	
	14 - 107	29.88	970	3	-	
	12 - 92	34.73	1130	3	-	
	11 - 87	36.93	1200	3	-	
	9.5 - 75	42.87	1390	3	-	
	8.6 - 67	47.75	1550	3	-	
	7.8 - 61	52.69	1710	3	-	
	7.2 - 56	56.73	1840	3	-	
	6.4 - 50	64.21	2080	3	-	
	6.0 - 47	68.54	2220	3	-	
	5.4 - 42	76.23	2470	3	-	
	5.1 - 40	80.55	2610	3	-	
	4.6 - 36	89.71	2910	3	-	
	4.1 - 32	98.99	3210	3	-	**R57 VU21 DT100L6**
	3.8 - 30	106.58	3460	3	-	
	3.4 - 27	120.63	3910	3	-	
	3.2 - 25	128.97	4180	3	-	**R67 VU21 DT100L6**
	3.0 - 23	137.67	4470	3	-	
	2.8 - 22	145.67	4730	3	-	**R77 VU21 DT100L6**
	2.6 - 21	155.34	5040	3	-	**R87 VU21 DT100L6**
	2.3 - 18	181.77	5900	3	-	
	2.1 - 16	195	5960	2	2	**R87R57 VU21 DT100L6**
	2.0 - 16	205.71	6670	3	-	**R87 VU21 DT100L6**
	1.9 - 15	216.54	7030	3	-	
	1.8 - 14	232	7090	2	2	
	1.7 - 14	236	7100	3	2	
	1.6 - 13	256	7820	2	2	**R87R57 VU21 DT100L6**
	1.5 - 12	268	8060	3	2	
	1.4 - 11	300	9160	2	2	

Please consult your SEW-Eurodrive Assembly Center for additional speed (RPM) selections and dimension pages not listed.

آتور صنعت ATOORSANAT

آتور صنعت ATOORSANAT SEW EURODRIVE

8:1

Input/Output P_n / P_{a2} HP	Speed Range n_{a1} - n_{a2} rpm	Gear Ratio *i*	Output Torque T_{a2} lb-in	Gear Stages Pri	Gear Stages Sec	Model
2.00/1.60	1.3 - 11	305	9180	3	2	
	1.2 - 9.1	352	10600	3	2	
	1.1 - 8.9	361	11000	2	2	**R87R57 VU21 DT100L6**
	1.0 - 8.0	400	12200	2	2	
	0.90 - 7.0	456	13700	3	2	
	0.88 - 6.9	466	14200	2	2	
	0.85 - 6.6	484	14600	3	2	
	0.75 - 5.8	549	16800	2	2	
	0.73 - 5.7	560	16800	3	2	
	0.65 - 5.1	625	19100	2	2	**R97R57 VU21 DT100L6**
	0.56 - 4.3	737	22200	3	2	
	0.54 - 4.2	755	22700	2	3	
	0.50 - 3.9	824	24800	3	2	
	0.47 - 3.6	878	26400	2	3	
	0.45 - 3.5	919	27600	2	3	
	0.44 - 3.4	939	28200	3	2	
	0.39 - 3.0	1055	31700	2	3	**R107R77 VU21 DT100L6**
	0.37 - 2.9	1104	33200	3	2	
	0.34 - 2.6	1209	36400	2	3	
	0.33 - 2.6	1226	36900	3	2	
	0.29 - 2.3	1397	42000	3	2	
	0.26 - 2.0	1598	48100	3	2	
	0.22 - 1.7	1839	55300	3	2	**R137R77 VU21 DT100L6**
	0.20 - 1.5	2073	62400	3	2	
	0.18 - 1.4	2242	67500	2	3	
	0.16 - 1.3	2555	76900	3	2	
	0.14 - 1.1	2898	85900	3	3	**R147R77 VU21 DT100L6**
	0.12 - 0.97	3302	97900	3	3	
	0.11 - 0.85	3754	111200	3	3	
3.00/2.50	289 - 2295	1.42	66	1	-	
	246 - 1950	1.67	78	1	-	
	218 - 1735	1.88	88	1	-	
	193 - 1530	2.13	99	1	-	
	169 - 1340	2.43	113	1	-	**RX77 VU31 DV112M6**
	152 - 1210	2.70	126	1	-	
	133 - 1060	3.08	144	1	-	
	126 - 1005	3.25	152	1	-	
	111 - 881	3.70	173	1	-	
	102 - 807	4.04	188	1	-	
	91 - 725	4.50	210	1	-	
	81 - 643	5.07	235	1	-	**RX87 VU31 DV112M6**
	74 - 586	5.56	260	1	-	
	72 - 572	5.70	265	2	-	
	65 - 520	6.27	290	2	-	
	56 - 443	7.36	345	2	-	
	53 - 419	7.79	365	2	-	
	47 - 375	8.70	405	2	-	
	41 - 326	10.00	465	2	-	**R67 VU31 DV112M6**
	36 - 283	11.54	540	2	-	
	32 - 257	12.70	590	2	-	
	28 - 219	14.91	695	2	-	
	26 - 206	15.79	735	2	-	
	23 - 182	17.95	840	2	-	

Please consult your SEW-Eurodrive Assembly Center for additional speed (RPM) selections and dimension pages not listed.

آتور صنعت ATOORSANAT

8:1

Input/Output P_n / P_{a2} HP	Speed Range n_{a1} - n_{a2} rpm	Gear Ratio *i*	Output Torque T_{a2} lb-in	Gear Stages Pri	Gear Stages Sec	Model
3.00/2.50	21 - 164	19.89	930	2	-	
	14 - 113	28.83	1340	3	-	
	13 - 101	32.27	1510	3	-	
	11 - 87	37.50	1750	3	-	
	10 - 82	39.88	1860	3	-	
	8.9 - 70	46.29	2160	3	-	**R67 VU31 DV112M6**
	8.0 - 63	51.56	2410	3	-	
	5.9 - 47	69.75	3250	3	-	
	5.5 - 44	74.17	3460	3	-	
	4.8 - 38	86.11	4020	3	-	
	4.3 - 34	95.91	4470	3	-	
	4.0 - 32	102.99	4800	3	-	**R77 VU31 DV112M6**
	3.5 - 28	118.43	5520	3	-	
	3.3 - 26	124.97	5830	3	-	**R87 VU31 DV112M6**
	2.9 - 23	142.41	6640	3	-	
	2.6 - 21	155.34	7250	3	-	
	2.4 - 19	170.02	7930	3	-	**R97 VU31 DV112M6**
	2.2 - 18	186.30	8690	3	-	
3.00/2.30	2.1 - 17	195	8560	2	2	
	2.0 - 16	209	9040	3	2	
	1.8 - 14	232	10200	2	2	
	1.7 - 14	236	10200	3	2	**R87R57 VU31 DV112M6**
	1.6 - 13	256	11200	2	2	
	1.5 - 12	268	11600	3	2	
	1.4 - 11	300	13200	2	2	
	1.3 - 11	305	13200	3	2	
	1.2 - 9.3	349	15300	2	2	
	1.1 - 8.8	370	16200	2	2	
	0.98 - 7.8	420	18400	2	2	
	0.95 - 7.6	431	18600	3	2	**R97R57 VU31 DV112M6**
	0.88 - 7.0	466	20500	2	2	
	0.85 - 6.7	484	20900	3	2	
	0.73 - 5.8	560	24200	3	2	
	0.67 - 5.3	614	26600	3	2	
	0.66 - 5.2	626	27100	2	3	
	0.57 - 4.5	717	31000	2	3	
	0.50 - 4.0	822	35600	3	2	
	0.46 - 3.7	888	38400	2	3	
	0.43 - 3.4	951	41100	3	2	**R107R77 VU31 DV112M6**
	0.39 - 3.1	1043	45100	2	3	
	0.38 - 3.0	1090	47100	3	2	
	0.37 - 3.0	1105	47800	2	3	
	0.33 - 2.7	1226	53000	3	2	
	0.29 - 2.3	1397	60400	3	2	
	0.26 - 2.0	1598	69100	3	2	
	0.24 - 1.9	1705	73700	3	2	
	0.21 - 1.7	1951	84400	3	2	**R147R77 VU31 DV112M6**
	0.19 - 1.5	2211	95600	3	2	
	0.16 - 1.3	2555	110500	3	2	
	0.15 - 1.2	2657	114900	3	2	
	0.13 - 1.1	3099	132000	3	3	**R167R97 VU31 DV112M6**
	0.11 - 0.88	3692	157300	3	3	

Please consult your SEW-Eurodrive Assembly Center for additional speed (RPM) selections and dimension pages not listed.

آتور صنعت ATOORSANAT
SEW EURODRIVE

1.VARIGEAR® with theSNUGGLER® Helical Gear Units

5:1						
Input/Output P_n / P_{a2} HP	Speed Range n_{a1} - n_{a2} rpm	Gear Ratio *i*	Output Torque T_{a2} lb-in	Gear Stages Pri	Gear Stages Sec	Model
0.50/0.40	175 - 915	4.22	28	2	-	
	151 - 787	4.90	32	2	-	
	142 - 740	5.21	34	2	-	
	122 - 638	6.05	40	2	-	
	110 - 573	6.74	44	2	-	
	99 - 519	7.44	49	2	-	
	82 - 430	8.97	59	2	-	
	71 - 370	10.42	68	2	-	
	67 - 348	11.08	73	2	-	
	57 - 300	12.87	85	2	-	
	52 - 269	14.33	94	2	-	
	47 - 244	15.81	104	2	-	
	43 - 227	17.03	112	2	-	
	38 - 200	19.27	127	2	-	
	36 - 188	20.57	135	2	-	
	31 - 163	23.63	155	2	-	**FA37 VU01 DT71D4**
	26 - 137	28.09	185	3	-	
	23 - 122	31.69	210	3	-	
	21 - 107	35.91	235	3	-	
	19 - 101	38.31	250	3	-	
	17 - 88	43.83	290	3	-	
	16 - 82	47.02	310	3	-	
	14 - 75	51.70	340	3	-	
	13 - 66	58.32	385	3	-	
	11 - 58	66.09	435	3	-	
	10 - 55	70.50	465	3	-	
	9.2 - 48	80.65	530	3	-	
	8.5 - 45	86.53	570	3	-	
	7.4 - 38	100.36	660	3	-	
	6.3 - 33	117.88	775	3	-	
	5.8 - 30	128.51	840	3	-	
	5.7 - 30	130.07	850	3	-	
	4.9 - 26	150.06	990	3	-	**FA47 VU01 DT71D4**
	4.2 - 22	175.38	1150	3	-	
	3.9 - 20	190.76	1250	3	-	
	3.7 - 19	199.70	1310	3	-	**FA57 VU01 DT71D4**
	3.2 - 17	228.99	1500	3	-	**FA67 VU01 DT71D4**
	2.8 - 14.0	175.38	1780	3	-	**FA47 VU01 DT80K6**
	2.6 - 13.0	190.76	1940	3	-	
	2.5 - 13.0	199.70	2030	3	-	**FA57 VU01 DT80K6**
	2.2 - 11.0	228.99	2320	3	-	**FA67 VU01 DT80K6**
0.50/0.38	1.9 - 10.0	382	2360	2	2	
	1.7 - 9.1	426	2630	2	2	
	1.6 - 8.5	452	2750	3	2	
	1.5 - 7.6	506	3080	3	2	
	1.3 - 6.9	558	3400	3	2	**FA57R37 VU01 DT71D4**
	1.1 - 6.0	646	3930	3	2	
	1.0 - 5.2	738	4500	3	2	
	0.99 - 5.2	749	4560	2	3	
	0.87 - 4.5	851	5180	3	2	
	0.86 - 4.5	856	5210	2	3	

Please consult your SEW-Eurodrive Assembly Center for additional speed (RPM) selections and dimension pages not listed.

آتور صنعت ATOORSANAT

5:1

Input/Output P_n / P_{a2} HP	Speed Range n_{a1} - n_{a2} rpm	Gear Ratio *i*	Output Torque T_{a2} lb-in	Gear Stages Pri	Gear Stages Sec	Model
0.50/0.38	0.76 - 4.0	970	5910	3	2	**FA67R37 VU01 DT71D4**
	0.75 - 3.9	984	5990	2	3	
	0.67 - 3.5	1102	6710	3	2	
	0.66 - 3.4	1126	6860	2	3	
	0.62 - 3.2	1200	7310	3	2	**FA77R37 VU01 DT71D4**
	0.55 - 2.9	1354	8250	3	2	
	0.52 - 2.7	1433	8730	2	3	
	0.48 - 2.5	1544	9400	3	2	
	0.43 - 2.2	1728	10500	3	2	
	0.36 - 1.9	2029	12200	3	3	
	0.35 - 1.8	2134	13000	2	3	**FA87R57 VU01 DT71D4**
	0.34 - 1.8	2199	13400	3	2	
	0.29 - 1.5	2576	15700	3	2	
	0.26 - 1.3	2881	17500	3	2	
	0.23 - 1.2	3244	19800	3	2	
	0.21 - 1.1	3503	21300	2	3	
	0.20 - 1.0	3721	22300	3	3	
	0.19 - 0.98	3919	23900	2	3	
	0.17 - 0.91	4245	25500	3	3	
	0.15 - 0.77	5016	30600	2	3	**FA97R57 VU01 DT71D4**
	0.13 - 0.68	5680	34600	2	3	
0.75/0.60	175 - 915	4.22	42	2	-	**FA37 VU01 DT80K4**
	151 - 787	4.90	48	2	-	
	142 - 740	5.21	51	2	-	
	122 - 638	6.05	60	2	-	
	110 - 573	6.74	66	2	-	
	99 - 519	7.44	73	2	-	
	82 - 430	8.97	88	2	-	
	71 - 370	10.42	103	2	-	
	67 - 348	11.08	109	2	-	
	57 - 300	12.87	127	2	-	
	52 - 269	14.33	141	2	-	
	47 - 244	15.81	156	2	-	
	43 - 227	17.03	168	2	-	
	38 - 200	19.27	190	2	-	
	36 - 188	20.57	205	2	-	
	31 - 163	23.63	235	2	-	
	26 - 137	28.09	275	3	-	
	23 - 122	31.69	310	3	-	
	21 - 107	35.91	355	3	-	
	19 - 101	38.31	380	3	-	
	17 - 88	43.83	430	3	-	
	16 - 82	47.02	465	3	-	
	14 - 75	51.70	510	3	-	
	13 - 66	58.32	575	3	-	
	11 - 58	66.09	650	3	-	
	10 - 55	70.50	695	3	-	
	9.2 - 48	80.65	795	3	-	
	8.5 - 45	86.53	850	3	-	
	7.4 - 38	100.36	990	3	-	
	6.3 - 33	117.88	1160	3	-	
	5.8 - 30	128.51	1270	3	-	

Please consult your SEW-Eurodrive Assembly Center for additional speed (RPM) selections and dimension pages not listed.

آتور صنعت ATOORSANAT

آتور صنعت ATOORSANAT SEW EURODRIVE

5:1

Input/Output P_n / P_{a2} HP	Speed Range n_{a1} - n_{a2} rpm	Gear Ratio *i*	Output Torque T_{a2} lb-in	Gear Stages Pri	Gear Stages Sec	Model
0.75/0.60	5.7 - 30	130.07	1280	3	-	
	4.9 - 26	150.06	1480	3	-	**FA47 VU01 DT80K4**
	4.2 - 22	175.38	1730	3	-	
	3.9 - 20	190.76	1880	3	-	
	3.7 - 19	199.70	1970	3	-	**FA57 VU01 DT80K4**
	3.2 - 17	228.99	2260	3	-	**FA67 VU01 DT80K4**
	2.8 - 14.0	175.38	2670	3	-	**FA47 VU01 DT80N6**
	2.6 - 13.0	190.76	2900	3	-	
	2.5 - 13.0	199.70	3040	3	-	**FA57 VU01 DT80N6**
	2.2 - 11.0	228.99	3490	3	-	**FA67 VU01 DT80N6**
0.75/0.56	1.9 - 10.0	382	3540	2	2	
	1.7 - 9.1	426	3950	2	2	
	1.6 - 8.5	452	4130	3	2	**FA57R37 VU01 DT80K4**
	1.5 - 7.6	506	4620	3	2	
	1.3 - 6.9	558	5100	3	2	
	1.2 - 6.0	641	5860	3	2	
	1.0 - 5.3	722	6600	2	3	**FA67R37 VU01 DT80K4**
	0.98 - 5.1	755	6900	3	2	
	0.91 - 4.7	815	7560	2	2	
	0.83 - 4.3	893	8160	2	3	
	0.81 - 4.2	910	8310	3	2	**FA77R37 VU01 DT80K4**
	0.70 - 3.7	1053	9620	3	2	
	0.62 - 3.2	1200	11000	3	2	
	0.55 - 2.9	1354	12400	3	2	
	0.50 - 2.6	1493	13600	3	2	
	0.43 - 2.3	1709	15600	3	2	
	0.39 - 2.0	1913	17500	2	3	
	0.38 - 2.0	1930	17600	3	2	**FA87R57 VU01 DT80K4**
	0.35 - 1.8	2134	19500	2	3	
	0.34 - 1.8	2199	20100	3	2	
	0.29 - 1.5	2576	23500	3	2	
	0.26 - 1.3	2881	26300	3	2	
	0.25 - 1.3	2907	26600	3	2	
	0.22 - 1.2	3352	30600	3	2	**FA97R57 VU01 DT80K4**
	0.19 - 0.99	3906	35700	3	2	

5:1 - 6:1

Input/Output P_n / P_{a2} HP	Speed Range n_{a1} - n_{a2} rpm	Gear Ratio *i*	Output Torque T_{a2} lb-in	Gear Stages Pri	Gear Stages Sec	Model
1.00/0.83	175 - 915	4.22	57	2	-	
	151 - 787	4.90	67	2	-	
	142 - 740	5.21	71	2	-	
	122 - 638	6.05	82	2	-	
	110 - 573	6.74	91	2	-	
	99 - 519	7.44	101	2	-	
	82 - 430	8.97	122	2	-	**FA37 VU01 DT80N4**
	71 - 370	10.42	142	2	-	
	67 - 348	11.08	150	2	-	
	57 - 300	12.87	175	2	-	
	52 - 269	14.33	195	2	-	
	47 - 244	15.81	215	2	-	
	43 - 227	17.03	230	2	-	

Please consult your SEW-Eurodrive Assembly Center for additional speed (RPM) selections and dimension pages not listed.

آتور صنعت ATOORSANAT

5:1 - 6:1

Input/Output P_n / P_{a2} HP	Speed Range n_{a1} - n_{a2} rpm	Gear Ratio *i*	Output Torque T_{a2} lb-in	Gear Stages Pri	Gear Stages Sec	Model
1.00/0.83	38 - 200	19.27	260	2	-	
	36 - 188	20.57	280	2	-	
	31 - 163	23.63	320	2	-	
	26 - 137	28.09	380	3	-	
	23 - 122	31.69	430	3	-	
	21 - 107	35.91	490	3	-	
	19 - 101	38.31	520	3	-	
	17 - 88	43.83	595	3	-	
	16 - 82	47.02	640	3	-	**FA37 VU01 DT80N4**
	14 - 75	51.70	700	3	-	
	13 - 66	58.32	790	3	-	
	11 - 58	66.09	900	3	-	
	10 - 55	70.50	960	3	-	
	9.2 - 48	80.65	1090	3	-	
	8.5 - 45	86.53	1170	3	-	
	7.4 - 38	100.36	1360	3	-	
	6.3 - 33	117.88	1600	3	-	
	5.8 - 30	128.51	1740	3	-	
	5.7 - 30	130.07	1770	3	-	
	4.9 - 26	150.06	2040	3	-	**FA47 VU01 DT80N4**
	4.2 - 22	175.38	2380	3	-	
	3.9 - 20	190.76	2590	3	-	
	3.7 - 19	199.70	2710	3	-	**FA57 VU01 DT80N4**
	3.2 - 17	228.99	3110	3	-	**FA67 VU01 DT80N4**
	2.9 - 17	150.06	3110	3	-	**FA47 VU11 DT90S6**
	2.7 - 16	157.09	3250	3	-	**FA57 VU11 DT90S6**
	2.5 - 15	170.85	3540	3	-	**FA67 VU11 DT90S6**
	2.2 - 13	195.39	4050	3	-	
	1.9 - 11	225.79	4680	3	-	**FA77 VU11 DT90S6**
1.00/0.78	1.7 - 8.8	437	5500	3	2	
	1.6 - 8.5	454	5800	2	2	
	1.5 - 7.7	500	6390	2	2	**FA67R37 VU01 DT80N4**
	1.4 - 7.2	539	6780	2	3	
	1.3 - 6.7	572	7200	3	2	
	1.2 - 6.3	615	7740	3	2	
	1.1 - 5.8	660	8430	2	2	
	1.0 - 5.5	706	9020	2	2	
	0.91 - 4.8	810	10200	3	2	**FA77R37 VU01 DT80N4**
	0.81 - 4.2	910	11500	3	2	
	0.70 - 3.7	1053	13300	3	2	
	0.65 - 3.4	1142	14400	2	3	
	0.64 - 3.4	1148	14500	3	2	
	0.58 - 3.0	1278	16100	2	3	
	0.57 - 3.0	1300	16400	3	2	
	0.50 - 2.6	1493	18800	3	2	**FA87R57 VU01 DT80N4**
	0.43 - 2.3	1709	21500	3	2	
	0.39 - 2.0	1913	24100	2	3	
	0.38 - 2.0	1930	24300	3	2	
	0.34 - 1.8	2199	27700	2	3	
	0.33 - 1.7	2245	28300	3	2	
	0.30 - 1.6	2448	30800	2	3	**FA97R57 VU01 DT80N4**
	0.29 - 1.5	2553	32100	3	2	
	0.25 - 1.3	2907	36600	3	2	

Please consult your SEW-Eurodrive Assembly Center for additional speed (RPM) selections and dimension pages not listed.

آتور صنعت ATOORSANAT
SEW EURODRIVE

5:1 - 6:1

Input/Output P_n / P_{a2} HP	Speed Range n_{a1} - n_{a2} rpm	Gear Ratio *i*	Output Torque T_{a2} lb-in	Gear Stages Pri	Gear Stages Sec	Model
1.00/0.78	0.22 - 1.3	1970	37800	3	2	**FA97R57 VU11 DT90S6**
	0.21 - 1.2	2068	39700	3	2	
	0.18 - 1.1	2369	45500	3	2	
	0.16 - 0.92	2756	52900	3	2	**FA107R77 VU11 DT90S6**
	0.14 - 0.83	3037	58300	3	2	
	0.12 - 0.72	3521	66600	3	3	
	0.11 - 0.64	3926	74200	3	3	
	0.09 - 0.56	4533	85700	3	3	**FA127R77 VU11 DT90S6**
	0.08 - 0.49	5153	97500	3	3	

6:1

Input/Output P_n / P_{a2} HP	Speed Range n_{a1} - n_{a2} rpm	Gear Ratio *i*	Output Torque T_{a2} lb-in	Gear Stages Pri	Gear Stages Sec	Model
1.50/1.20	172 - 1050	3.77	72	2	-	
	153 - 938	4.22	81	2	-	
	132 - 807	4.90	94	2	-	
	124 - 759	5.21	100	2	-	
	107 - 654	6.05	116	2	-	
	96 - 587	6.74	130	2	-	
	87 - 532	7.44	143	2	-	
	81 - 494	8.01	154	2	-	
	72 - 441	8.97	172	2	-	
	62 - 380	10.42	200	2	-	
	58 - 357	11.08	215	2	-	
	50 - 307	12.87	245	2	-	
	45 - 276	14.33	275	2	-	
	41 - 250	15.81	305	2	-	
	38 - 232	17.03	325	2	-	
	34 - 205	19.27	370	2	-	**FA37 VU11 DT90S4**
	31 - 192	20.57	395	2	-	
	27 - 167	23.63	455	2	-	
	23 - 141	28.09	540	3	-	
	20 - 125	31.69	610	3	-	
	18 - 110	35.91	690	3	-	
	17 - 103	38.31	735	3	-	
	15 - 90	43.83	840	3	-	
	14 - 84	47.02	900	3	-	
	13 - 77	51.70	990	3	-	
	12 - 73	54.54	1050	3	-	
	11 - 68	58.32	1120	3	-	
	9.8 - 60	66.09	1270	3	-	
	9.2 - 56	70.50	1360	3	-	
	8.0 - 49	80.65	1550	3	-	
	7.5 - 46	86.53	1660	3	-	
	7.2 - 44	89.29	1720	3	-	
	6.2 - 38	105.09	2020	3	-	
	5.3 - 33	121.57	2340	3	-	**FA47 VU11 DT90S4**
	5.0 - 30	130.07	2500	3	-	
	4.3 - 26	150.06	2880	3	-	
	4.1 - 25	157.09	3020	3	-	**FA57 VU11 DT90S4**
	4.0 - 24	162.31	3120	3	-	**FA67 VU11 DT90S4**
	3.8 - 23	170.85	3280	3	-	

Please consult your SEW-Eurodrive Assembly Center for additional speed (RPM) selections and dimension pages not listed.

آتور صنعت ATOORSANAT

6:1

Input/Output P_n / P_{a2} HP	Speed Range n_{a1} - n_{a2} rpm	Gear Ratio *i*	Output Torque T_{a2} lb-in	Gear Stages Pri	Gear Stages Sec	Model
1.50/1.20	3.3 - 20	195.39	3760	3	-	**FA67 VU11 DT90S4**
	2.9 - 18	225.79	4340	3	-	**FA77 VU11 DT90S4**
	2.8 - 17	157.09	4600	3	-	**FA57 VU11 DT90L6**
	2.7 - 16	162.31	4750	3	-	**FA67 VU11 DT90L6**
	2.5 - 15	170.85	5000	3	-	
	2.2 - 13	195.39	5720	3	-	
	1.9 - 12	225.79	6610	3	-	**FA77 VU11 DT90L6**
1.50/1.10	1.7 - 10	392	7090	2	2	**FA67R37 VU11 DT90S4**
	1.6 - 9.6	413	7360	3	2	**FA77R37 VU11 DT90S4**
	1.5 - 9.1	433	7840	2	2	
	1.3 - 8.2	485	8780	2	2	
	1.2 - 7.4	538	9590	3	2	
	1.1 - 6.4	615	11000	3	2	
	0.91 - 5.6	710	12700	3	2	
	0.87 - 5.3	748	13300	2	3	**FA87R57 VU11 DT90S4**
	0.83 - 5.1	780	13900	3	2	
	0.73 - 4.5	887	15800	3	2	
	0.66 - 4.0	988	17600	2	3	
	0.64 - 3.9	1010	18000	3	2	
	0.57 - 3.5	1142	20400	2	3	
	0.56 - 3.4	1148	20500	3	2	
	0.51 - 3.1	1278	22800	2	3	
	0.50 - 3.0	1300	23200	3	2	
	0.44 - 2.7	1476	26300	2	3	
	0.42 - 2.6	1527	27200	3	2	**FA97R57 VU11 DT90S4**
	0.38 - 2.3	1722	30700	3	2	
	0.37 - 2.3	1741	31000	2	3	
	0.33 - 2.0	1970	35100	3	2	
	0.31 - 1.9	2068	36900	3	2	**FA107R77 VU11 DT90S4**
	0.27 - 1.7	2369	42200	3	2	
	0.23 - 1.4	2756	49100	3	2	
	0.21 - 1.3	3037	54100	3	2	
	0.18 - 1.1	3521	61800	3	3	
	0.16 - 1.0	3926	68900	3	3	**FA127R77 VU11 DT90S4**
	0.14 - 0.87	4533	79600	3	3	
	0.13 - 0.77	5153	90500	3	3	
	0.11 - 0.67	5925	104000	3	3	
2.00/1.60	172 - 1050	3.77	99	2	-	**FA37 VU11 DT90L4**
	153 - 938	4.22	111	2	-	
	132 - 807	4.90	129	2	-	
	124 - 759	5.21	137	2	-	
	107 - 654	6.05	159	2	-	
	96 - 587	6.74	177	2	-	
	87 - 532	7.44	195	2	-	
	81 - 494	8.01	210	2	-	
	72 - 441	8.97	235	2	-	
	62 - 380	10.42	275	2	-	
	58 - 357	11.08	290	2	-	
	50 - 307	12.87	340	2	-	
	45 - 276	14.33	375	2	-	
	41 - 250	15.81	415	2	-	
	38 - 232	17.03	445	2	-	
	34 - 205	19.27	505	2	-	

Please consult your SEW-Eurodrive Assembly Center for additional speed (RPM) selections and dimension pages not listed.

آتور صنعت ATOORSANAT

آتور صنعت ATOORSANAT SEW EURODRIVE

6:1

Input/Output P_n / P_{a2} HP	Speed Range n_{a1} - n_{a2} rpm	Gear Ratio *i*	Output Torque T_{a2} lb-in	Gear Stages Pri	Gear Stages Sec	Model
2.00/1.60	31 - 192	20.57	540	2	-	**FA37 VU11 DT90L4**
	27 - 167	23.63	620	2	-	
	23 - 141	28.09	740	3	-	
	20 - 125	31.69	830	3	-	
	18 - 110	35.91	940	3	-	
	17 - 103	38.31	1010	3	-	
	15 - 90	43.83	1150	3	-	
	14 - 84	47.02	1240	3	-	
	13 - 77	51.70	1360	3	-	
	12 - 73	54.54	1430	3	-	
	11 - 68	58.32	1530	3	-	
	9.8 - 60	66.09	1740	3	-	
	9.5 - 58	68.09	1790	3	-	**FA47 VU11 DT90L4**
	8.1 - 50	79.72	2090	3	-	
	7.2 - 44	89.29	2350	3	-	
	6.2 - 38	105.09	2760	3	-	
	5.3 - 33	121.57	3190	3	-	
	5.0 - 30	130.07	3420	3	-	
	4.8 - 29	136.16	3580	3	-	**FA57 VU11 DT90L4**
	4.3 - 26	152	3760	2	2	**FA57R37 VU11 DT90L4**
	4.2 - 26	155	3780	3	2	
	4.1 - 25	157.09	4130	3	-	**FA57 VU11 DT90L4**
	3.8 - 23	170	4200	2	2	**FA57R37 VU11 DT90L4**
	3.6 - 22	181	4410	3	2	
	3.2 - 20	200	4950	2	2	
	2.8 - 17	231	5630	3	2	**FA67R37 VU11 DT90L4**
	2.7 - 17	238	5890	2	2	
	2.5 - 15	261	6450	2	2	
	2.3 - 14.0	280	6820	3	2	**FA77R37 VU11 DT90L4**
	2.2 - 14.0	292	7220	2	2	
	2.0 - 12.0	323	7870	3	2	
	1.9 - 11.0	346	8560	2	2	
	1.8 - 11.0	367	8940	3	2	
	1.7 - 11.0	370	9150	2	2	
	1.6 - 9.6	413	10100	3	2	
	1.3 - 8.2	480	11700	3	2	
	1.2 - 7.4	538	13100	3	2	
	1.1 - 6.7	592	14600	2	2	**FA87R57 VU11 DT90L4**
	0.98 - 6.0	662	16400	2	2	
	0.96 - 5.9	674	16400	3	2	
	0.87 - 5.3	748	18200	2	3	
	0.83 - 5.1	780	19000	3	2	
	0.73 - 4.5	887	21600	3	2	
	0.66 - 4.0	988	24100	2	3	
	0.64 - 3.9	1010	24600	3	2	
	0.63 - 3.9	1022	24900	3	2	**FA97R57 VU11 DT90L4**
	0.55 - 3.4	1171	28500	3	2	
	0.54 - 3.3	1189	29000	2	3	
	0.49 - 3.0	1327	32300	3	2	
	0.44 - 2.7	1468	35800	2	3	
	0.42 - 2.6	1527	37200	3	2	
	0.41 - 2.5	1597	38900	3	2	**FA107R77 VU11 DT90L4**
	0.35 - 2.2	1826	44500	3	2	

Please consult your SEW-Eurodrive Assembly Center for additional speed (RPM) selections and dimension pages not listed.

آتور صنعت ATOORSANAT

6:1

Input/Output P_n / P_{a2} HP	Speed Range n_{a1} - n_{a2} rpm	Gear Ratio *i*	Output Torque T_{a2} lb-in	Gear Stages Pri	Gear Stages Sec	Model
2.00/1.60	0.31 - 1.9	2068	50400	3	2	
	0.27 - 1.7	2369	57700	3	2	**FA107R77 VU11 DT90L4**
	0.23 - 1.4	2756	67100	3	2	
	0.21 - 1.3	3031	72700	3	3	
	0.19 - 1.1	3454	82900	3	3	**FA127R77 VU11 DT90L4**
	0.16 - 1.0	3926	94200	3	3	
	0.15 - 0.93	2672	104000	3	2	**FA127R77 VU21 DT100L6**
3.00/2.50	118 - 734	5.18	205	2	-	
	103 - 636	5.98	240	2	-	
	93 - 578	6.58	265	2	-	
	79 - 492	7.73	310	2	-	
	75 - 464	8.19	330	2	-	
	66 - 408	9.31	375	2	-	
	58 - 357	10.64	425	2	-	
	50 - 309	12.29	490	2	-	
	45 - 281	13.52	540	2	-	
	39 - 239	15.88	635	2	-	
	37 - 226	16.81	675	2	-	
	32 - 199	19.11	765	2	-	
	29 - 180	21.17	850	2	-	
	25 - 152	24.96	1000	2	-	
	22 - 134	28.45	1140	2	-	**FA57 VU21 DT100LS4**
	21 - 127	29.94	1200	2	-	
	20 - 126	30.15	1210	3	-	
	17 - 106	35.79	1430	3	-	
	16 - 99	38.21	1530	3	-	
	14.0 - 85	44.73	1790	3	-	
	12.0 - 76	50.10	2000	3	-	
	10.0 - 64	58.97	2360	3	-	
	9.0 - 56	68.22	2730	3	-	
	8.4 - 52	72.98	2920	3	-	
	7.4 - 46	83.46	3340	3	-	
	6.6 - 41	93.47	3740	3	-	
	5.6 - 35	110.01	4400	3	-	
	4.8 - 30	127.27	5090	3	-	
	4.3 - 27	142.40	5700	3	-	
	3.8 - 23	162.31	6490	3	-	**FA67 VU21 DT100LS4**
	3.6 - 22	170.85	6840	3	-	
	3.3 - 20	188.40	7540	3	-	**FA77 VU21 DT100LS4**
	3.1 - 19	198.31	7940	3	-	
	2.7 - 17	228.93	9160	3	-	
	2.4 - 15	255.37	10200	3	-	**FA87 VU21 DT100LS4**
	2.3 - 14.0	270.68	10800	3	-	
	2.1 - 12.0	197.20	12200	3	-	**FA87 VU31 DV112M6**
	1.8 - 11.0	223.88	13800	3	-	
	1.6 - 9.7	253.41	15700	3	-	**FA97 VU31 DV112M6**
	1.5 - 8.9	276.77	17100	3	-	
3.00/2.30	1.4 - 8.4	452	16800	3	2	
	1.3 - 8.1	468	17600	2	2	
	1.2 - 7.3	519	19500	2	2	**FA87R57 VU21 DT100LS4**
	1.0 - 6.4	592	22300	2	2	
	0.93 - 5.7	662	24900	2	2	
	0.91 - 5.6	674	25000	3	2	

Please consult your SEW-Eurodrive Assembly Center for additional speed (RPM) selections and dimension pages not listed.

آتور صنعت ATOORSANAT
SEW EURODRIVE

6:1

Input/Output P_n / P_{a2} HP	Speed Range n_{a1} - n_{a2} rpm	Gear Ratio *i*	Output Torque T_{a2} lb-in	Gear Stages Pri	Gear Stages Sec	Model
3.00/2.30	0.89 - 5.5	690	25600	3	2	
	0.81 - 5.0	760	28600	2	2	
	0.78 - 4.8	784	29100	3	2	**FA97R57 VU21 DT100LS4**
	0.69 - 4.3	892	33600	2	2	
	0.68 - 4.2	898	33300	3	2	
	0.60 - 3.7	1022	37900	3	2	
	0.56 - 3.5	1087	40300	3	2	
	0.49 - 3.1	1243	46100	3	2	
	0.44 - 2.7	1401	52000	3	2	**FA107R77 VU21 DT100LS4**
	0.38 - 2.4	1597	59200	3	2	
	0.34 - 2.1	1826	67700	3	2	
	0.30 - 1.9	2038	75600	3	2	
	0.26 - 1.6	2357	87400	3	2	**FA127R77 VU21 DT100LS4**
	0.23 - 1.4	2672	99100	3	2	
	0.21 - 1.3	1944	111300	3	2	
	0.19 - 1.1	2185	125100	3	2	**FA157R97 VU31 DV112M6**
	0.17 - 1.0	2427	139000	3	2	
	0.15 - 0.89	2780	156800	3	3	
5.00/4.00	154 - 914	3.97	275	2	-	
	131 - 779	4.66	325	2	-	
	116 - 691	5.25	365	2	-	
	103 - 610	5.95	415	2	-	
	90 - 535	6.78	475	2	-	
	81 - 482	7.53	525	2	-	
	71 - 422	8.60	600	2	-	
	67 - 400	9.08	635	2	-	
	63 - 376	9.66	675	2	-	
	54 - 321	11.31	790	2	-	
	48 - 284	12.76	890	2	-	
	42 - 251	14.46	1010	2	-	**FA67 VU31 DT100L4**
	37 - 220	16.48	1150	2	-	
	33 - 198	18.29	1280	2	-	
	29 - 174	20.90	1460	2	-	
	28 - 165	22.05	1540	2	-	
	24 - 144	25.13	1760	2	-	
	22 - 132	27.41	1920	2	-	
	18 - 107	34.01	2380	3	-	
	16 - 92	39.26	2740	3	-	
	14 - 84	43.20	3020	3	-	
	12 - 72	50.74	3540	3	-	
	11 - 68	53.73	3750	3	-	
	10 - 59	61.07	4270	3	-	
	9.0 - 54	67.65	4730	3	-	**FA67 VU31 DT100L4**
	6.7 - 40	90.59	6330	3	-	
	6.4 - 38	95.94	6700	3	-	
	5.6 - 33	108.46	7580	3	-	
	5.3 - 32	114.45	7990	3	-	**FA77 VU31 DT100L4**
	4.7 - 28	130.42	9110	3	-	
	4.3 - 26	142.27	9940	3	-	
	3.8 - 23	159.61	11100	3	-	**FA87 VU31 DT100L4**
	3.4 - 20	179.97	12600	3	-	
	3.2 - 19	193.00	12700	2	2	**FA87R57 VU31 DT100L4**
	3.1 - 18	197.20	13800	3	-	**FA87 VU31 DT100L4**

Please consult your SEW-Eurodrive Assembly Center for additional speed (RPM) selections and dimension pages not listed.

آتور صنعت ATOORSANAT

6:1							
Input/Output P_n / P_{a2} HP	Speed Range n_{a1} - n_{a2} rpm	Gear Ratio *i*	Output Torque T_{a2} lb-in	Gear Stages Pri	Gear Stages Sec	Model	
5.00/4.00	2.9 - 17	211	13900	2	2		
	2.5 - 15	240	15800	2	2		
	2.2 - 13.0	281	18500	2	2		
	2.0 - 12.0	300	19400	3	2	**FA87R57 VU31 DT100L4**	
	1.9 - 12.0	315	20700	2	2		
	1.8 - 11.0	345	22300	3	2		
	1.7 - 10.0	350	23000	2	2		
	1.5 - 9.1	398	26200	2	2		
	1.3 - 7.7	473	31100	2	2		
	1.2 - 7.1	510	33500	2	2	**FA97R57 VU31 DT100L4**	
	1.1 - 6.4	569	37400	2	2		
	0.95 - 5.7	640	41500	3	2		
	0.83 - 4.9	736	47700	3	2	**FA107R77 VU31 DT100L4**	
	0.73 - 4.4	834	54000	3	2		
	0.64 - 3.8	950	61500	3	2		
	0.57 - 3.4	1077	69800	3	2		
	0.50 - 3.0	1220	79000	3	2	**FA127R77 VU31 DT100L4**	
	0.44 - 2.6	1390	90000	3	2		
	0.38 - 2.3	1606	104000	3	2		
	0.36 - 2.2	1674	108400	3	2		
	0.31 - 1.9	1944	125900	3	2	**FA157R97 VU31 DT100L4**	
	0.28 - 1.7	2185	141500	3	2		
	0.25 - 1.5	2427	157200	3	2		
7.50/6.00	155 - 941	3.97	405	2	-		
	132 - 802	4.66	475	2	-		
	117 - 712	5.25	535	2	-		
	103 - 628	5.95	605	2	-		
	91 - 551	6.78	690	2	-		
	82 - 496	7.53	765	2	-		
	71 - 434	8.60	880	2	-		
	68 - 412	9.08	920	2	-		
	64 - 387	9.66	980	2	-		
	54 - 330	11.31	1150	2	-		
	48 - 293	12.76	1300	2	-		
	43 - 258	14.46	1470	2	-		
	37 - 227	16.48	1680	2	-	**FA67 VU31 DV132S4**	
	34 - 204	18.29	1860	2	-		
	29 - 179	20.90	2130	2	-		
	28 - 169	22.05	2240	2	-		
	24 - 149	25.13	2560	2	-		
	22 - 136	27.41	2790	2	-		
	18 - 110	34.01	3460	3	-		
	16 - 95	39.26	3990	3	-		
	14.0 - 87	43.20	4400	3	-		
	12.0 - 74	50.74	5160	3	-		
	11.0 - 70	53.73	5470	3	-		
	10.0 - 61	61.07	6210	3	-		
	9.1 - 55	67.65	6880	3	-		
	8.5 - 52	72.50	7380	3	-		
	8.2 - 50	75.02	7630	3	-		
	7.2 - 44	85.52	8700	3	-	**FA77 VU31 DV132S4**	
	6.5 - 39	94.93	9660	3	-		
	5.7 - 34	108.46	11000	3	-		

Please consult your SEW-Eurodrive Assembly Center for additional speed (RPM) selections and dimension pages not listed.

آتور صنعت ATOORSANAT
SEW EURODRIVE

6:1

Input/Output P_n / P_{a2} HP	Speed Range n_{a1} - n_{a2} rpm	Gear Ratio *i*	Output Torque T_{a2} lb-in	Gear Stages Pri	Gear Stages Sec	Model
7.50/6.00	5.4 - 33	114.45	11600	3	-	**FA77 VU31 DV132S4**
	4.7 - 29	130.42	13300	3	-	
	4.6 - 28	134.16	13700	3	-	**FA87 VU31 DV132S4**
	3.9 - 23	159.61	16200	3	-	
	3.4 - 21	179.97	18300	3	-	
	3.1 - 19	197.20	20100	3	-	
	2.7 - 17	223.88	22800	3	-	**FA97 VU31 DV132S4**
	2.4 - 15	253.41	25800	3	-	
	2.2 - 14.0	276.77	28200	3	-	
7.50/5.60	1.4 - 8.6	436	41100	3	2	**FA107R77 VU31 DV132S4**
	1.3 - 7.6	489	46100	3	2	
	1.1 - 6.7	560	52800	3	2	
	0.96 - 5.8	640	60400	3	2	
	0.95 - 5.8	648	61100	3	2	**FA127R77 VU31 DV132S4**
	0.85 - 5.1	727	68600	3	2	
	0.75 - 4.6	820	77400	3	2	
	0.66 - 4.0	930	87700	3	2	
	0.57 - 3.5	1077	101600	3	2	
	0.53 - 3.2	1169	110300	3	2	**FA157R97 VU31 DV132S4**
	0.47 - 2.9	1308	123400	3	2	
	0.43 - 2.6	1441	133900	3	3	
	0.37 - 2.2	1674	157900	3	2	
10.00/8.30	141 - 862	4.28	610	2	-	**FA77 VU41 DV132M4**
	117 - 715	5.16	735	2	-	
	105 - 640	5.76	820	2	-	
	91 - 556	6.64	940	2	-	
	82 - 499	7.39	1050	2	-	
	73 - 447	8.26	1170	2	-	
	65 - 397	9.30	1320	2	-	
	55 - 338	10.93	1550	2	-	
	50 - 302	12.20	1730	2	-	
	43 - 262	14.06	2000	2	-	
	39 - 236	15.64	2220	2	-	
	35 - 211	17.49	2480	2	-	
	31 - 187	19.70	2800	2	-	
	28 - 172	21.43	3040	2	-	
	24 - 145	25.50	3620	2	-	
	20 - 123	29.91	4250	3	-	
	18 - 109	33.74	4790	3	-	
	16 - 96	38.23	5430	3	-	
	14 - 85	43.58	6190	3	-	
	13 - 76	48.37	6870	3	-	
	11 - 67	55.27	7850	3	-	
	10 - 63	58.32	8280	3	-	
	8.1 - 49	75.02	10700	3	-	
	7.1 - 43	85.52	12100	3	-	
	6.9 - 42	88.01	12500	3	-	**FA87 VU41 DV132M4**
	6.2 - 38	97.89	13900	3	-	
	5.5 - 34	109.49	15500	3	-	
	4.9 - 30	123.29	17500	3	-	
	4.5 - 27	134.16	19100	3	-	
	3.8 - 23	159.61	22700	3	-	
	3.5 - 21	174.87	24800	3	-	**FA97 VU41 DV132M4**

Please consult your SEW-Eurodrive Assembly Center for additional speed (RPM) selections and dimension pages not listed.

آتور صنعت ATOORSANAT

6:1

Input/Output P_n / P_{a2} HP	Speed Range n_{a1} - n_{a2} rpm	Gear Ratio *i*	Output Torque T_{a2} lb-in	Gear Stages Pri	Gear Stages Sec	Model
10.00/8.30	3.2 - 19	189.92	27000	3	-	**FA97 VU41 DV132M4**
	2.7 - 16	223.88	31800	3	-	
	2.4 - 14	254.40	36100	3	-	**FA107 VU41 DV132M4**
	2.3 - 14	174.87	37300	3	-	**FA97 VU41 DV160M6**
10.00/7.80	1.4 - 8.5	436	57400	3	2	**FA107R77 VU41 DV132M4**
	1.2 - 7.5	489	64400	3	2	
	1.1 - 6.7	549	72300	3	2	**FA127R77 VU41 DV132M4**
	0.93 - 5.7	648	85300	3	2	
	0.83 - 5.1	727	95700	3	2	
	0.79 - 4.8	764	100600	3	2	**FA157R97 VU41 DV132M4**
	0.72 - 4.4	845	111300	3	2	
	0.63 - 3.9	953	125500	3	2	
	0.52 - 3.2	1169	153900	3	2	
15.00/12.10	141 - 862	4.28	880	2	-	**FA77 VU41 DV160M4**
	117 - 715	5.16	1060	2	-	
	105 - 640	5.76	1190	2	-	
	91 - 556	6.64	1370	2	-	
	82 - 499	7.39	1520	2	-	
	73 - 447	8.26	1700	2	-	
	65 - 397	9.30	1920	2	-	
	55 - 338	10.93	2250	2	-	
	50 - 302	12.20	2520	2	-	
	43 - 262	14.06	2900	2	-	
	39 - 236	15.64	3220	2	-	
	35 - 211	17.49	3610	2	-	
	31 - 187	19.70	4060	2	-	
	28 - 172	21.43	4420	2	-	
	24 - 145	25.50	5260	2	-	
	20 - 123	29.91	6170	3	-	
	18 - 109	33.74	6960	3	-	
	16 - 96	38.23	7880	3	-	
	14.0 - 85	43.58	8980	3	-	
	13.0 - 76	48.37	9970	3	-	
	11.0 - 67	55.27	11400	3	-	
	10.0 - 63	58.32	12000	3	-	
	8.8 - 54	68.40	14100	3	-	**FA87 VU41 DV160M4**
	7.9 - 48	76.39	15700	3	-	
	6.9 - 42	88.01	18100	3	-	
	6.2 - 38	97.89	20200	3	-	
	5.5 - 34	109.49	22600	3	-	
	4.9 - 30	123.29	25400	3	-	
	4.7 - 29	127.42	26300	3	-	**FA97 VU41 DV160M4**
	4.3 - 26	140.71	29000	3	-	
	3.9 - 24	156.30	32200	3	-	
	3.5 - 21	174.87	36100	3	-	
	3.4 - 21	178.64	36800	3	-	**FA107 VU41 DV160M4**
	3.0 - 19	199.31	41100	3	-	
	2.8 - 17	215.37	44400	3	-	
	2.4 - 14.0	254.40	52400	3	-	
15.00/11.30	1.8 - 11.0	333	63700	3	2	**FA107R77 VU41 DV160M4**
	1.6 - 9.8	376	71900	3	2	**FA127R77 VU41 DV160M4**
	1.4 - 8.6	428	81800	3	2	
	1.3 - 7.6	483	92300	3	2	**FA127R87 VU41 DV160M4**

Please consult your SEW-Eurodrive Assembly Center for additional speed (RPM) selections and dimension pages not listed.

آتور صنعت ATOORSANAT
SEW EURODRIVE

6:1

Input/Output P_n / P_{a2} HP	Speed Range n_{a1} - n_{a2} rpm	Gear Ratio *i*	Output Torque T_{a2} lb-in	Gear Stages Pri	Gear Stages Sec	Model
15.00/11.30	1.2 - 7.5	495	94600	3	2	**FA127R77 VU41 DV160M4**
	1.1 - 6.7	549	104900	3	2	
	0.89 - 5.4	680	130000	3	2	**FA157R97 VU41 DV160M4**
	0.79 - 4.8	764	146000	3	2	
20.00/16.50	150 - 907	4.12	1150	2	-	**FA87 VU51 DV160L4**
	125 - 758	4.92	1370	2	-	
	110 - 662	5.63	1570	2	-	
	93 - 561	6.65	1850	2	-	
	84 - 508	7.35	2050	2	-	
	74 - 450	8.29	2310	2	-	
	64 - 389	9.58	2670	2	-	
	54 - 326	11.46	3190	2	-	
	47 - 284	13.12	3650	2	-	
	40 - 241	15.48	4310	2	-	
	36 - 218	17.12	4770	2	-	
	32 - 193	19.31	5380	2	-	
	29 - 175	21.32	5940	2	-	
	26 - 158	23.68	6600	2	-	
	23 - 141	26.50	7380	2	-	
	21 - 128	29.20	8130	3	-	
	18 - 106	35.19	9800	3	-	
	16 - 95	39.30	10900	3	-	
	14.0 - 82	45.28	12600	3	-	
	12.0 - 74	50.36	14000	3	-	
	11.0 - 66	56.75	15800	3	-	
	9.0 - 55	68.40	19100	3	-	
	8.1 - 49	76.39	21300	3	-	
	7.0 - 42	88.01	24500	3	-	
	6.9 - 42	89.85	25000	3	-	**FA97 VU51 DV160L4**
	6.0 - 37	102.16	28500	3	-	
	5.5 - 33	112.99	31500	3	-	
	4.8 - 29	127.42	35500	3	-	
	4.7 - 29	129.97	36200	3	-	**FA107 VU51 DV160L4**
	4.2 - 25	146.49	40800	3	-	
	3.8 - 23	161.28	44900	3	-	
	3.5 - 21	178.64	49800	3	-	
	3.1 - 19	199.31	55500	3	-	
20.00/15.30	2.1 - 13.0	293	75700	3	2	**FA127R87 VU51 DV160L4**
	2.0 - 12.0	312	80600	3	2	
	1.7 - 10.0	374	96600	3	2	
	1.4 - 8.4	446	115200	3	2	**FA157R97 VU51 DV160L4**
	1.2 - 7.4	503	129900	3	2	
	1.1 - 6.5	576	148800	3	2	
25.00/20.00	150 - 907	4.12	1420	2	-	**FA87 VU51 DV180M4**
	125 - 758	4.92	1690	2	-	
	110 - 662	5.63	1940	2	-	
	93 - 561	6.65	2290	2	-	
	84 - 508	7.35	2530	2	-	
	74 - 450	8.29	2850	2	-	
	64 - 389	9.58	3300	2	-	
	54 - 326	11.46	3940	2	-	
	47 - 284	13.12	4520	2	-	
	40 - 241	15.48	5330	2	-	

Please consult your SEW-Eurodrive Assembly Center for additional speed (RPM) selections and dimension pages not listed.

آتور صنعت ATOORSANAT

6:1							
Input/Output P_n / P_{a2} HP	Speed Range n_{a1} - n_{a2} rpm	Gear Ratio *i*	Output Torque T_{a2} lb-in	Gear Stages Pri	Gear Stages Sec	Model
25.00/20.00	36 - 218	17.12	5890	2	-	
	32 - 193	19.31	6650	2	-	
	29 - 175	21.32	7340	2	-	
	26 - 158	23.68	8150	2	-	
	23 - 141	26.50	9120	2	-	
	21 - 128	29.20	10100	3	-	
	18 - 106	35.19	12100	3	-	**FA87 VU51 DV180M4**
	16 - 95	39.30	13500	3	-	
	14.0 - 82	45.28	15600	3	-	
	12.0 - 74	50.36	17300	3	-	
	11.0 - 66	56.75	19500	3	-	
	9.0 - 55	68.40	23500	3	-	
	8.1 - 49	76.39	26300	3	-	
	7.7 - 46	80.31	27600	3	-	
	7.1 - 43	86.59	29800	3	-	
	6.9 - 42	89.85	30900	3	-	**FA97 VU51 DV180M4**
	6.0 - 37	102.16	35200	3	-	
	5.2 - 32	117.94	40600	3	-	
	4.7 - 29	129.97	44700	3	-	
	4.2 - 25	146.49	50400	3	-	**FA107 VU51 DV180M4**
	3.8 - 23	161.28	55500	3	-	
	3.5 - 21	178.64	61500	3	-	
25.00/19.00	3.1 - 19	198	63200	3	2	
	2.8 - 17	223	71200	3	2	
	2.4 - 14.0	259	82700	3	2	**FA127R87 VU51 DV180M4**
	2.1 - 13.0	293	93500	3	2	
	2.0 - 12.0	312	99600	3	2	
	1.7 - 11.0	353	112700	3	2	**FA157R97 VU51 DV180M4**
	1.4 - 8.4	446	142400	3	2	
30.00/24.00	150 - 907	4.12	1680	2	-	
	125 - 758	4.92	2010	2	-	
	110 - 662	5.63	2300	2	-	
	93 - 561	6.65	2710	2	-	
	84 - 508	7.35	3000	2	-	
	74 - 450	8.29	3380	2	-	
	64 - 389	9.58	3910	2	-	
	54 - 326	11.46	4670	2	-	
	47 - 284	13.12	5350	2	-	
	40 - 241	15.48	6310	2	-	
	36 - 218	17.12	6980	2	-	**FA87 VU51 DV180L4**
	32 - 193	19.31	7870	2	-	
	29 - 175	21.32	8690	2	-	
	26 - 158	23.68	9650	2	-	
	23 - 141	26.50	10800	2	-	
	21 - 128	29.20	11900	3	-	
	18 - 106	35.19	14300	3	-	
	16 - 95	39.30	16000	3	-	
	14.0 - 82	45.28	18500	3	-	
	12.0 - 74	50.36	20500	3	-	
	11.0 - 66	56.75	23100	3	-	
	9.4 - 57	65.47	26700	3	-	
	8.5 - 52	72.29	29500	3	-	**FA97 VU51 DV180L4**
	8.2 - 49	75.63	30800	3	-	

Please consult your SEW-Eurodrive Assembly Center for additional speed (RPM) selections and dimension pages not listed.

آتور صنعت ATOORSANAT
SEW EURODRIVE

6:1

Input/Output P_n / P_{a2} HP	Speed Range n_{a1} - n_{a2} rpm	Gear Ratio *i*	Output Torque T_{a2} lb-in	Gear Stages Pri	Gear Stages Sec	Model
30.00/24.00	7.7 - 46	80.31	32700	3	-	
	7.1 - 43	86.59	35300	3	-	**FA97 VU51 DV180L4**
	6.9 - 42	89.85	36600	3	-	
	6.7 - 40	92.47	37700	3	-	
	6.1 - 37	101.38	41300	3	-	
	5.2 - 32	117.94	48100	3	-	
	4.7 - 29	129.97	53000	3	-	**FA107 VU51 DV180L4**
	4.2 - 25	146.49	59700	3	-	
	3.8 - 23	161.28	65700	3	-	
	3.6 - 22	170.83	69600	3	-	**FA127 VU51 DV180L4**
30.00/23.00	3.1 - 19	198	74800	3	2	
	2.8 - 17	223	84300	3	2	**FA127R87 VU51 DV180L4**
	2.4 - 14.0	259	97900	3	2	
	2.3 - 14.0	273	103200	3	2	
	2.0 - 12.0	302	114100	3	2	**FA157R97 VU51 DV180L4**
	1.7 - 11.0	353	133400	3	2	

4:1

Input/Output P_n / P_{a2} HP	Speed Range n_{a1} - n_{a2} rpm	Gear Ratio *i*	Output Torque T_{a2} lb-in	Gear Stages Pri	Gear Stages Sec	Model
40.00/34.00	106 - 487	6.22	4340	2	-	
	89 - 409	7.40	5170	2	-	
	79 - 362	8.37	5840	2	-	
	68 - 312	9.69	6760	2	-	
	66 - 304	9.96	6950	2	-	
	53 - 246	12.33	8600	2	-	
	45 - 206	14.67	10200	2	-	
	40 - 183	16.58	11600	2	-	
	34 - 158	19.20	13400	2	-	
	30 - 139	21.76	15200	2	-	
	26 - 120	25.14	17500	2	-	
	24 - 110	27.57	19200	2	-	**FA107 VU6 DV200L4**
	21 - 95	31.80	22200	3	-	
	19 - 90	33.79	23600	2	-	
	17 - 80	37.61	26200	3	-	
	15 - 70	43.03	30000	3	-	
	13.0 - 60	50.73	35400	3	-	
	11.0 - 52	58.12	40600	3	-	
	9.7 - 45	67.62	47200	3	-	
	8.8 - 41	74.52	52000	3	-	
	7.8 - 36	83.99	58600	3	-	
	7.4 - 34	88.49	61700	3	-	
	7.1 - 33	92.47	64500	3	-	
	6.7 - 31	98.95	69100	3	-	
	5.8 - 26	114.34	79800	3	-	**FA127 VU6 DV200L4**
	5.2 - 24	125.37	87500	3	-	
	4.6 - 21	141.80	99000	3	-	
	4.0 - 19	162.96	113700	3	-	**FA157 VU6 DV200L4**
	3.7 - 17	178.20	124400	3	-	
	3.0 - 14.0	217.62	151900	3	-	

Please consult your SEW-Eurodrive Assembly Center for additional speed (RPM) selections and dimension pages not listed.

3:1							
Input/Output P_n / P_{a2} HP	Speed Range n_{a1} - n_{a2} rpm	Gear Ratio *i*	Output Torque T_{a2} lb-in	Gear Stages Pri	Gear Stages Sec	Model	
50.00/40.00	133 - 402	6.22	6310	2	-		
	111 - 338	7.40	7510	2	-		
	99 - 299	8.37	8490	2	-		
	85 - 258	9.69	9830	2	-		
	83 - 251	9.96	10100	2	-		
	67 - 203	12.33	12500	2	-		
	56 - 170	14.67	14900	2	-		
	50 - 151	16.58	16800	2	-		
	43 - 130	19.20	19500	2	-	**FA107 VU6 DV225S4**	
	38 - 115	21.76	22100	2	-		
	33 - 99	25.14	25500	2	-		
	30 - 91	27.57	28000	2	-		
	26 - 79	31.80	32300	3	-		
	24 - 74	33.79	34300	2	-		
	22 - 66	37.61	38100	3	-		
	19 - 58	43.03	43600	3	-		
	16 - 49	50.73	51500	3	-		
	14.0 - 43	58.12	59000	3	-		
	13.0 - 39	63.91	64800	3	-		
	12.0 - 36	70.07	71100	3	-		
	11.0 - 33	75.41	76500	3	-	**FA127 VU6 DV225S4**	
	9.4 - 29	87.31	88600	3	-		
	8.3 - 25	98.95	100400	3	-		
	7.6 - 23	108.49	110000	3	-		
	6.6 - 20	125.14	126900	3	-	**FA157 VU6 DV225S4**	
	5.8 - 18	141.80	143800	3	-		
60.00/50.00	133 - 402	6.22	7780	2	-		
	111 - 338	7.40	9260	2	-		
	99 - 299	8.37	10500	2	-		
	85 - 258	9.69	12100	2	-		
	83 - 251	9.96	12500	2	-		
	67 - 203	12.33	15400	2	-		
	56 - 170	14.67	18300	2	-		
	50 - 151	16.58	20700	2	-		
	43 - 130	19.20	24000	2	-	**FA107 VU6 DV225M4**	
	38 - 115	21.76	27200	2	-		
	33 - 99	25.14	31500	2	-		
	30 - 91	27.57	34500	2	-		
	26 - 79	31.80	39800	3	-		
	24 - 74	33.79	42300	2	-		
	22 - 66	37.61	47100	3	-		
	19 - 58	43.03	53800	3	-		
	16 - 49	50.73	63500	3	-		
	15 - 45	55.31	69200	3	-		
	13.0 - 39	63.91	79900	3	-	**FA127 VU6 DV225M4**	
	12.0 - 36	70.07	87700	3	-		
	11.0 - 33	75.41	94300	3	-		
	9.6 - 29	85.80	107300	3	-		
	8.5 - 26	96.53	120800	3	-	**FA157 VU6 DV225M4**	
	7.6 - 23	108.49	135700	3	-		
	6.6 - 20	125.14	156500	3	-		

Please consult your SEW-Eurodrive Assembly Center for additional speed (RPM) selections and dimension pages not listed.

آتور صنعت ATOORSANAT
SEW EURODRIVE

7:1						
Input/Output P_n / P_{a2} HP	Speed Range n_{a1} - n_{a2} rpm	Gear Ratio *i*	Output Torque T_{a2} lb-in	Gear Stages Pri	Gear Stages Sec	Model
1.00/0.83	114 - 803	3.77	65	2	-	
	102 - 717	4.22	73	2	-	
	88 - 617	4.90	85	2	-	
	83 - 580	5.21	90	2	-	
	71 - 500	6.05	105	2	-	
	64 - 449	6.74	117	2	-	
	58 - 407	7.44	129	2	-	
	54 - 377	8.01	139	2	-	
	48 - 337	8.97	155	2	-	
	41 - 290	10.42	181	2	-	
	39 - 273	11.08	192	2	-	
	33 - 235	12.87	225	2	-	
	30 - 211	14.33	250	2	-	
	27 - 191	15.81	275	2	-	
	25 - 178	17.03	295	2	-	
	22 - 157	19.27	335	2	-	
	21 - 147	20.57	355	2	-	**FA37 VU11 DT90S6**
	18 - 128	23.63	410	2	-	
	15 - 108	28.09	485	3	-	
	14.0 - 95	31.69	550	3	-	
	12.0 - 84	35.91	620	3	-	
	11.0 - 79	38.31	665	3	-	
	9.8 - 69	43.83	760	3	-	
	9.2 - 64	47.02	810	3	-	
	8.3 - 59	51.70	900	3	-	
	7.9 - 55	54.54	940	3	-	
	7.4 - 52	58.32	1010	3	-	
	6.5 - 46	66.09	1140	3	-	
	6.1 - 43	70.50	1220	3	-	
	5.3 - 38	80.65	1400	3	-	
	5.0 - 35	86.53	1500	3	-	
	4.3 - 30	100.36	1740	3	-	
	4.1 - 29	105.09	1820	3	-	
	3.5 - 25	121.57	2110	3	-	**FA47 VU11 DT90S6**
	3.3 - 23	130.07	2250	3	-	
	2.9 - 20	150.06	2600	3	-	
	2.7 - 19	157.09	2720	3	-	**FA57 VU11 DT90S6**
	2.5 - 18	170.85	2960	3	-	**FA67 VU11 DT90S6**
	2.2 - 15	195.39	3380	3	-	
	1.9 - 13.0	225.79	3910	3	-	**FA77 VU11 DT90S6**
1.00/0.78	1.7 - 12.0	255	4090	3	2	
	1.6 - 12.0	262	4270	2	2	**FA57R37 VU11 DT90S6**
	1.4 - 10.0	298	4860	2	2	
	1.3 - 9.1	333	5430	2	2	
	1.1 - 7.7	392	6390	2	2	**FA67R37 VU11 DT90S6**
	0.98 - 6.9	437	7020	3	2	
	0.90 - 6.3	480	7710	3	2	
	0.89 - 6.2	485	7910	2	2	
	0.80 - 5.6	538	8640	3	2	
	0.75 - 5.3	571	9310	2	2	**FA77R37 VU11 DT90S6**
	0.70 - 4.9	615	9880	3	2	
	0.61 - 4.3	710	11400	3	2	
	0.53 - 3.7	810	13000	3	2	

Please consult your SEW-Eurodrive Assembly Center for additional speed (RPM) selections and dimension pages not listed.

آتور صنعت ATOORSANAT

7:1						
Input/Output P_n / P_{a2} HP	Speed Range n_{a1} - n_{a2} rpm	Gear Ratio *i*	Output Torque T_{a2} lb-in	Gear Stages Pri	Gear Stages Sec	Model
1.00/0.78	0.49 - 3.4	887	14200	3	2	**FA87R57 VU11 DT90S6**
	0.44 - 3.1	988	15900	2	3	
	0.43 - 3.0	1010	16200	3	2	
	0.38 - 2.6	1142	18300	2	3	
	0.37 - 2.6	1148	18400	3	2	
	0.34 - 2.4	1278	20500	2	3	
	0.33 - 2.3	1300	20900	3	2	
	0.29 - 2.0	1493	24000	3	2	
	0.28 - 2.0	1527	24500	3	2	**FA97R57 VU11 DT90S6**
	0.25 - 1.8	1722	27700	3	2	
	0.22 - 1.5	1970	31600	3	2	
	0.20 - 1.4	2199	35300	2	3	
	0.19 - 1.3	2245	36100	3	2	
	0.18 - 1.3	2369	38000	3	2	**FA107R77 VU11 DT90S6**
	0.16 - 1.1	2756	44300	3	2	
	0.14 - 1.0	3037	48800	3	2	
	0.12 - 0.86	3521	55700	3	3	
	0.11 - 0.77	3948	62400	3	3	
	0.09 - 0.67	4533	71700	3	3	**FA127R77 VU11 DT90S6**
	0.08 - 0.59	5153	81500	3	3	
	0.07 - 0.51	5925	93700	3	3	
	0.06 - 0.45	6715	106200	3	3	
1.50/1.20	115 - 825	3.77	92	2	-	**FA37 VU11 DT90L6**
	102 - 737	4.22	103	2	-	
	88 - 634	4.90	120	2	-	
	83 - 596	5.21	128	2	-	
	71 - 514	6.05	148	2	-	
	64 - 461	6.74	165	2	-	
	58 - 418	7.44	182	2	-	
	54 - 388	8.01	196	2	-	
	48 - 346	8.97	220	2	-	
	41 - 298	10.42	255	2	-	
	39 - 280	11.08	270	2	-	
	34 - 241	12.87	315	2	-	
	30 - 217	14.33	350	2	-	
	27 - 197	15.81	385	2	-	
	25 - 183	17.03	415	2	-	
	22 - 161	19.27	470	2	-	
	21 - 151	20.57	505	2	-	
	18 - 132	23.63	580	2	-	
	15 - 111	28.09	685	3	-	
	14.0 - 98	31.69	775	3	-	
	12.0 - 87	35.91	880	3	-	
	11.0 - 81	38.31	940	3	-	
	9.9 - 71	43.83	1070	3	-	
	9.2 - 66	47.02	1150	3	-	
	8.4 - 60	51.70	1270	3	-	**FA37 VU11 DT90L6**
	7.9 - 57	54.54	1330	3	-	
	7.4 - 53	58.32	1430	3	-	
	6.5 - 47	66.09	1620	3	-	
	6.1 - 44	70.50	1730	3	-	
	5.4 - 39	79.72	1950	3	-	**FA47 VU11 DT90L6**
	4.8 - 35	89.29	2190	3	-	

Please consult your SEW-Eurodrive Assembly Center for additional speed (RPM) selections and dimension pages not listed.

آتور صنعت ATOORSANAT
SEW EURODRIVE

7:1

Input/Output P_n / P_{a2} HP	Speed Range n_{a1} - n_{a2} rpm	Gear Ratio *i*	Output Torque T_{a2} lb-in	Gear Stages Pri	Gear Stages Sec	Model
1.50/1.20	4.1 - 30	105.09	2570	3	-	**FA47 VU11 DT90L6**
	3.6 - 26	121.57	2980	3	-	
	3.3 - 24	130.07	3180	3	-	
	3.2 - 23	136.16	3330	3	-	**FA57 VU11 DT90L6**
	2.8 - 20	157.09	3840	3	-	
	2.7 - 19	162.31	3970	3	-	**FA67 VU11 DT90L6**
	2.5 - 18	170.85	4180	3	-	
	2.2 - 16	195.39	4780	3	-	
	1.9 - 14.0	225.79	5530	3	-	**FA77 VU11 DT90L6**
1.50/1.10	1.8 - 13.0	238	5480	2	2	**FA67R37 VU11 DT90L6**
	1.7 - 12.0	261	6010	2	2	
	1.5 - 10.0	297	6840	2	2	
	1.4 - 10.0	305	6920	3	2	
	1.3 - 9.6	323	7330	3	2	**FA77R37 VU11 DT90L6**
	1.2 - 9.0	346	7970	2	2	
	1.0 - 7.5	413	9370	3	2	
	0.90 - 6.5	480	10900	3	2	
	0.80 - 5.8	538	12200	3	2	
	0.73 - 5.2	592	13600	2	2	**FA87R57 VU11 DT90L6**
	0.71 - 5.1	609	13800	3	2	
	0.65 - 4.7	662	15300	2	2	
	0.64 - 4.6	674	15300	3	2	
	0.58 - 4.2	748	17000	2	3	
	0.55 - 4.0	780	17700	3	2	
	0.49 - 3.5	887	20100	3	2	
	0.44 - 3.1	988	22400	2	3	
	0.43 - 3.1	1010	22900	3	2	
	0.38 - 2.7	1148	26000	3	2	
	0.37 - 2.7	1171	26600	3	2	**FA97R57 VU11 DT90L6**
	0.36 - 2.6	1189	27000	2	3	
	0.33 - 2.3	1327	30100	3	2	
	0.29 - 2.1	1468	33300	2	3	
	0.28 - 2.0	1527	34600	3	2	
	0.27 - 1.9	1597	36200	3	2	**FA107R77 VU11 DT90L6**
	0.24 - 1.7	1826	41400	3	2	
	0.21 - 1.5	2068	46900	3	2	
	0.18 - 1.3	2369	53800	3	2	
	0.16 - 1.1	2756	62500	3	2	
	0.14 - 1.0	3031	67700	3	3	**FA127R77 VU11 DT90L6**
	0.13 - 0.90	3454	77200	3	3	
	0.11 - 0.79	3926	87800	3	3	
	0.10 - 0.69	4533	101300	3	3	

آتور صنعت
ATOORSANAT

Please consult your SEW-Eurodrive Assembly Center for additional speed (RPM) selections and dimension pages not listed.

8:1						
Input/Output P_n / P_{a2} HP	Speed Range n_{a1} - n_{a2} rpm	Gear Ratio *i*	Output Torque T_{a2} lb-in	Gear Stages Pri	Gear Stages Sec	Model
2.00/1.60	79 - 618	5.18	168	2	-	
	68 - 536	5.98	194	2	-	
	62 - 487	6.58	215	2	-	
	53 - 414	7.73	250	2	-	
	50 - 391	8.19	265	2	-	
	44 - 344	9.31	300	2	-	
	38 - 301	10.64	345	2	-	
	33 - 261	12.29	400	2	-	
	30 - 237	13.52	440	2	-	
	26 - 202	15.88	515	2	-	
	24 - 191	16.81	545	2	-	
	21 - 168	19.11	620	2	-	
	19 - 151	21.17	685	2	-	
	16 - 128	24.96	810	2	-	**FA57 VU21 DT100L6**
	14.0 - 113	28.45	920	2	-	
	11.0 - 89	35.79	1160	3	-	
	9.1 - 72	44.73	1450	3	-	
	8.2 - 64	50.10	1630	3	-	
	6.9 - 54	58.97	1910	3	-	
	6.0 - 47	68.22	2210	3	-	
	5.6 - 44	72.98	2370	3	-	
	4.9 - 38	83.46	2710	3	-	
	4.4 - 34	93.47	3030	3	-	
	3.7 - 29	110.01	3570	3	-	
	3.2 - 25	127.27	4130	3	-	
	3.0 - 24	136.16	4420	3	-	
	2.9 - 22	142.40	4620	3	-	
	2.5 - 20	162.31	5270	3	-	**FA67 VU21 DT100L6**
	2.4 - 19	170.85	5540	3	-	
	2.2 - 17	188.40	6110	3	-	**FA77 VU21 DT100L6**
	2.1 - 16	198.31	6430	3	-	
	1.9 - 15	211	6440	2	2	**FA87R57 VU21 DT100L6**
	1.8 - 14.0	228.93	7430	3	-	**FA87 VU21 DT100L6**
	1.7 - 13.0	240	7330	2	2	**FA87R57 VU21 DT100L6**
	1.6 - 13.0	255.37	8290	3	-	**FA87 VU21 DT100L6**
	1.5 - 12.0	270.68	8780	3	-	
	1.4 - 11.0	300	9030	3	2	
	1.3 - 10.0	315	9620	2	2	
	1.2 - 9.2	350	10700	2	2	
	1.0 - 8.0	398	12200	2	2	
	0.91 - 7.1	452	13600	3	2	
	0.87 - 6.8	468	14300	2	2	
	0.79 - 6.2	519	15900	2	2	**FA87R57 VU21 DT100L6**
	0.69 - 5.4	592	18100	2	2	
	0.67 - 5.3	609	18300	3	2	
	0.62 - 4.8	662	20200	2	2	
	0.61 - 4.8	674	20300	3	2	
	0.55 - 4.3	748	22500	2	3	
	0.52 - 4.1	780	23500	3	2	
	0.46 - 3.6	892	27200	2	2	
	0.40 - 3.1	1022	30700	3	2	**FA97R57 VU21 DT100L6**
	0.35 - 2.7	1171	35200	3	2	
	0.34 - 2.7	1189	35800	2	3	

Please consult your SEW-Eurodrive Assembly Center for additional speed (RPM) selections and dimension pages not listed.

آتور صنعت ATOORSANAT
SEW EURODRIVE

8:1						
Input/Output P_n / P_{a2} HP	**Speed Range n_{a1} - n_{a2} rpm**	**Gear Ratio *i***	**Output Torque T_{a2} lb-in**	**Gear Stages Pri**	**Sec**	**Model**
2.00/1.60	0.33 - 2.6	1243	37400	3	2	
	0.29 - 2.3	1401	42100	3	2	
	0.26 - 2.0	1597	48000	3	2	**FA107R77 VU21 DT100L6**
	0.22 - 1.8	1826	54900	3	2	
	0.20 - 1.5	2068	62200	3	2	
	0.17 - 1.4	2357	70900	3	2	
	0.15 - 1.2	2672	80400	3	2	**FA127R77 VU21 DT100L6**
	0.14 - 1.1	3031	89800	3	3	
	0.12 - 0.93	3454	102400	3	3	
3.00/2.50	103 - 821	3.97	185	2	-	
	88 - 700	4.66	215	2	-	
	78 - 621	5.25	245	2	-	
	69 - 548	5.95	280	2	-	
	60 - 481	6.78	315	2	-	
	55 - 433	7.53	350	2	-	
	48 - 379	8.60	400	2	-	
	45 - 359	9.08	425	2	-	
	42 - 338	9.66	450	2	-	
	36 - 288	11.31	530	2	-	
	32 - 256	12.76	595	2	-	
	28 - 226	14.46	675	2	-	
	25 - 198	16.48	770	2	-	
	22 - 178	18.29	850	2	-	
	20 - 156	20.90	970	2	-	**FA67 VU31 DV112M6**
	19 - 148	22.05	1030	2	-	
	16 - 130	25.13	1170	2	-	
	15 - 119	27.41	1280	2	-	
	12.0 - 96	34.01	1590	3	-	
	10.0 - 83	39.26	1830	3	-	
	9.5 - 75	43.20	2020	3	-	
	8.1 - 64	50.74	2370	3	-	
	7.6 - 61	53.73	2510	3	-	
	6.7 - 53	61.07	2850	3	-	
	6.1 - 48	67.65	3160	3	-	
	4.5 - 36	90.59	4230	3	-	
	4.3 - 34	95.94	4480	3	-	
	3.8 - 30	109.04	5090	3	-	
	3.4 - 27	120.79	5630	3	-	
	3.1 - 25	130.42	6080	3	-	**FA77 VU31 DV112M6**
	2.9 - 23	142.27	6640	3	-	
	2.6 - 20	159.61	7450	3	-	
	2.3 - 18	179.97	8400	3	-	**FA87 VU31 DV112M6**
	2.1 - 17	197.20	9200	3	-	
	1.8 - 15	223.88	10400	3	-	
	1.6 - 13.0	253.41	11800	3	-	**FA97 VU31 DV112M6**
	1.5 - 12.0	276.77	12900	3	-	
3.00/2.30	1.4 - 11.0	300	13000	3	2	
	1.3 - 10.0	315	13800	2	2	
	1.2 - 9.3	350	15400	2	2	
	1.0 - 8.2	398	17500	2	2	**FA87R57 VU31 DV112M6**
	0.91 - 7.2	452	19600	3	2	
	0.80 - 6.3	515	22300	3	2	
	0.67 - 5.4	609	26300	3	2	

Please consult your SEW-Eurodrive Assembly Center for additional speed (RPM) selections and dimension pages not listed.

آتور صنعت
ATOORSANAT

8:1						
Input/Output P_n / P_{a2} HP	Speed Range n_{a1} - n_{a2} rpm	Gear Ratio *i*	Output Torque T_{a2} lb-in	Gear Stages Pri	Gear Stages Sec	Model
3.00/2.30	0.59 - 4.7	690	29800	3	2	**FA97R57 VU31 DV112M6**
	0.52 - 4.2	784	33900	3	2	
	0.49 - 3.9	834	36100	3	2	**FA107R77 VU31 DV112M6**
	0.43 - 3.4	950	41100	3	2	
	0.38 - 3.0	1087	47000	3	2	
	0.33 - 2.6	1243	53800	3	2	
	0.29 - 2.3	1401	60600	3	2	
	0.26 - 2.0	1606	69500	3	2	**FA127R77 VU31 DV112M6**
	0.23 - 1.8	1784	77200	3	2	
	0.20 - 1.6	2038	88200	3	2	
	0.17 - 1.4	2357	102000	3	2	
	0.15 - 1.2	2780	118400	3	3	**FA157R97 VU31 DV112M6**
	0.13 - 1.0	3210	136800	3	3	
	0.11 - 0.90	3607	153700	3	3	

آتور صنعت
ATOORSANAT

Please consult your SEW-Eurodrive Assembly Center for additional speed (RPM) selections and dimension pages not listed.

آتور صنعت ATOORSANAT
SEW EURODRIVE

1.VARIGEAR® with Helical-Bevel Gear Units

5:1						
Input/Output P_n / P_{a2} HP	Speed Range n_{a1} - n_{a2} rpm	Gear Ratio *i*	Output Torque T_{a2} lb-in	Gear Stages Pri	Gear Stages Sec	Model
0.50/0.40	138 - 720	5.36	35	3	-	
	116 - 606	6.37	42	3	-	
	109 - 568	6.80	45	3	-	
	93 - 485	7.96	52	3	-	
	83 - 433	8.91	59	3	-	
	71 - 368	10.49	69	3	-	
	61 - 318	12.14	80	3	-	
	57 - 295	13.08	86	3	-	
	48 - 252	15.31	101	3	-	
	43 - 225	17.15	113	3	-	
	37 - 191	20.19	133	3	-	
	32 - 165	23.36	153	3	-	
	30 - 154	24.99	164	3	-	**K37 VU01 DT71D4**
	26 - 134	28.83	189	3	-	
	25 - 129	29.96	197	3	-	
	21 - 108	35.57	235	3	-	
	19 - 102	37.97	250	3	-	
	17 - 87	44.46	290	3	-	
	15 - 78	49.79	325	3	-	
	13 - 66	58.60	385	3	-	
	11 - 57	67.80	445	3	-	
	10 - 53	72.54	475	3	-	
	8.8 - 46	83.69	550	3	-	
	7.6 - 39	97.81	640	3	-	
	7.0 - 36	106.38	700	3	-	
	6.1 - 32	121.48	800	3	-	**K47 VU01 DT71D4**
	5.6 - 29	131.87	870	3	-	
	5.1 - 27	145.14	950	3	-	**K57 VU01 DT71D4**
	5.0 - 26	97.81	990	3	-	**K37 VU01 DT80K6**
	4.6 - 23	106.38	1080	3	-	
	4.1 - 21	121.48	1230	3	-	**K47 VU01 DT80K6**
	3.7 - 19	131.87	1340	3	-	
	3.4 - 17	145.14	1470	3	-	**K57 VU01 DT80K6**
0.50/0.38	3.3 - 17	225	1370	3	2	
	2.9 - 15	256	1560	3	2	
	2.6 - 13	289	1760	3	2	
	2.3 - 12	327	1990	3	2	**K47R37 VU01 DT71D4**
	2.0 - 10	375	2280	3	2	
	1.7 - 9.1	426	2590	3	2	
	1.5 - 7.8	495	3010	3	2	
	1.3 - 7.0	552	3360	3	2	
	1.2 - 6.3	615	3750	3	2	
	1.1 - 5.5	699	4260	3	2	**K57R37 VU01 DT71D4**
	0.92 - 4.8	806	4910	3	2	
	0.82 - 4.3	903	5500	3	2	
	0.72 - 3.7	1034	6300	3	2	**K67R37 VU01 DT71D4**
	0.63 - 3.3	1171	7130	3	2	
	0.61 - 3.2	1218	7420	3	2	
	0.53 - 2.8	1388	8450	3	2	
	0.49 - 2.5	1514	9220	3	2	**K77R37 VU01 DT71D4**
	0.42 - 2.2	1772	10800	3	2	
	0.36 - 1.9	2050	12500	3	2	

Please consult your SEW-Eurodrive Assembly Center for additional speed (RPM) selections and dimension pages not listed.

5:1

Input/Output P_n / P_{a2} HP	Speed Range n_{a1} - n_{a2} rpm	Gear Ratio *i*	Output Torque T_{a2} lb-in	Gear Stages Pri	Gear Stages Sec	Model
0.50/0.38	0.35 - 1.8	2088	12700	3	2	
	0.31 - 1.6	2371	14200	3	3	
	0.27 - 1.4	2728	16400	3	3	**K87R57 VU01 DT71D4**
	0.24 - 1.2	3107	18600	3	3	
	0.20 - 1.1	3609	21700	3	3	
	0.18 - 0.95	4082	24500	3	3	
	0.16 - 0.83	4669	28000	3	3	**K97R57 VU01 DT71D4**
	0.14 - 0.72	5391	32300	3	3	
	0.12 - 0.64	6027	36200	3	3	
0.75/0.60	138 - 720	5.36	53	3	-	
	116 - 606	6.37	63	3	-	
	109 - 568	6.80	67	3	-	
	93 - 485	7.96	78	3	-	
	83 - 433	8.91	88	3	-	
	71 - 368	10.49	103	3	-	
	61 - 318	12.14	120	3	-	
	57 - 295	13.08	129	3	-	
	48 - 252	15.31	151	3	-	
	43 - 225	17.15	169	3	-	
	37 - 191	20.19	199	3	-	
	32 - 165	23.36	230	3	-	
	30 - 154	24.99	245	3	-	**K37 VU01 DT80K4**
	26 - 134	28.83	285	3	-	
	25 - 129	29.96	295	3	-	
	21 - 108	35.57	350	3	-	
	19 - 102	37.97	375	3	-	
	17 - 87	44.46	440	3	-	
	15 - 78	49.79	490	3	-	
	13 - 66	58.60	575	3	-	
	11 - 57	67.80	670	3	-	
	10 - 53	72.54	715	3	-	
	8.8 - 46	83.69	820	3	-	
	7.6 - 39	97.81	960	3	-	
	7.0 - 36	106.38	1050	3	-	
	6.1 - 32	121.48	1200	3	-	**K47 VU01 DT80K4**
	5.6 - 29	131.87	1300	3	-	
	5.1 - 27	145.14	1430	3	-	**K57 VU01 DT80K4**
	5.0 - 26	97.81	1490	3	-	**K37 VU01 DT80N6**
	4.6 - 23	106.38	1620	3	-	
	4.1 - 21	121.48	1850	3	-	**K47 VU01 DT80N6**
	3.7 - 19	131.87	2010	3	-	
	3.4 - 17	145.14	2210	3	-	**K57 VU01 DT80N6**
0.75/0.56	3.3 - 17	225	2060	3	2	
	2.9 - 15	256	2340	3	2	
	2.6 - 13	289	2640	3	2	**K47R37 VU01 DT80K4**
	2.3 - 12	327	2990	3	2	
	2.0 - 10	375	3430	3	2	
	1.8 - 9.2	421	3850	3	2	
	1.6 - 8.2	473	4320	3	2	**K57R37 VU01 DT80K4**
	1.4 - 7.1	544	4970	3	2	
	1.2 - 6.3	613	5600	3	2	
	1.1 - 5.5	697	6370	3	2	**K67R37 VU01 DT80K4**
	0.93 - 4.9	793	7250	3	2	
	0.91 - 4.7	815	7450	3	2	**K77R37 VU01 DT80K4**
	0.80 - 4.2	924	8440	3	2	

Please consult your SEW-Eurodrive Assembly Center for additional speed (RPM) selections and dimension pages not listed.

آتور صنعت ATOORSANAT

آتور صنعت ATOORSANAT SEW EURODRIVE

5:1

Input/Output P_n / P_{a2} HP	Speed Range n_{a1} - n_{a2} rpm	Gear Ratio *i*	Output Torque T_{a2} lb-in	Gear Stages Pri	Gear Stages Sec	Model
0.75/0.56	0.70 - 3.7	1053	9620	3	2	
	0.61 - 3.2	1218	11100	3	2	**K77R37 VU01 DT80K4**
	0.53 - 2.8	1388	12700	3	2	
	0.52 - 2.7	1415	12900	3	2	
	0.45 - 2.3	1657	15100	3	2	
	0.40 - 2.1	1854	16900	3	2	**K87R57 VU01 DT80K4**
	0.35 - 1.8	2088	19100	3	2	
	0.31 - 1.6	2371	21300	3	3	
	0.27 - 1.4	2757	24800	3	3	
	0.24 - 1.2	3108	28000	3	3	**K97R57 VU01 DT80K4**
	0.21 - 1.1	3583	32200	3	3	
	0.18 - 0.95	4082	36700	3	3	

5:1 - 6:1

Input/Output P_n / P_{a2} HP	Speed Range n_{a1} - n_{a2} rpm	Gear Ratio *i*	Output Torque T_{a2} lb-in	Gear Stages Pri	Gear Stages Sec	Model
1.00/0.83	138 - 720	5.36	73	3	-	
	116 - 606	6.37	86	3	-	
	109 - 568	6.80	92	3	-	
	93 - 485	7.96	108	3	-	
	83 - 433	8.91	121	3	-	
	71 - 368	10.49	142	3	-	
	61 - 318	12.14	165	3	-	
	57 - 295	13.08	178	3	-	
	48 - 252	15.31	210	3	-	
	43 - 225	17.15	235	3	-	
	37 - 191	20.19	275	3	-	
	32 - 165	23.36	315	3	-	
	30 - 154	24.99	340	3	-	**K37 VU01 DT80N4**
	26 - 134	28.83	390	3	-	
	25 - 129	29.96	405	3	-	
	21 - 108	35.57	485	3	-	
	19 - 102	37.97	515	3	-	
	17 - 87	44.46	605	3	-	
	15 - 78	49.79	675	3	-	
	13 - 66	58.60	795	3	-	
	11 - 57	67.80	920	3	-	
	10 - 53	72.54	980	3	-	
	8.8 - 46	83.69	1140	3	-	
	7.6 - 39	97.81	1330	3	-	
	7.0 - 36	106.38	1440	3	-	
	6.1 - 32	121.48	1650	3	-	**K47 VU01 DT80N4**
	5.6 - 29	131.87	1790	3	-	
	5.1 - 27	145.14	1970	3	-	**K57 VU01 DT80N4**
	4.7 - 28	90.86	1880	3	-	**K47 VU11 DT90S6**
	4.1 - 24	104.37	2160	3	-	
	4.0 - 23	108.29	2240	3	-	**K57 VU11 DT90S6**
	3.5 - 20	123.85	2560	3	-	
	3.3 - 20	128.52	2660	3	-	
	3.2 - 19	135.28	2800	3	-	**K77 VU11 DT90S6**
	2.8 - 16	154.02	3190	3	-	
1.00/0.78	2.6 - 14	280	3520	3	2	
	2.3 - 12	319	4020	3	2	**K57R37 VU01 DT80N4**
	2.0 - 11	362	4560	3	2	

Please consult your SEW-Eurodrive Assembly Center for additional speed (RPM) selections and dimension pages not listed.

آتور صنعت
ATOORSANAT

5:1 - 6:1

Input/Output P_n / P_{a2} HP	Speed Range n_{a1} - n_{a2} rpm	Gear Ratio *i*	Output Torque T_{a2} lb-in	Gear Stages Pri	Gear Stages Sec	Model
1.00/0.78	1.8 - 9.2	421	5300	3	2	**K57R37 VU01 DT80N4**
	1.6 - 8.2	471	5930	3	2	**K67R37 VU01 DT80N4**
	1.4 - 7.1	542	6820	3	2	
	1.3 - 7.0	552	6950	3	2	**K77R37 VU01 DT80N4**
	1.2 - 6.2	622	7830	3	2	
	1.0 - 5.4	709	8920	3	2	
	0.91 - 4.7	815	10300	3	2	
	0.80 - 4.2	924	11600	3	2	
	0.70 - 3.7	1053	13300	3	2	
	0.69 - 3.6	1078	13600	3	2	**K87R57 VU01 DT80N4**
	0.60 - 3.1	1229	15500	3	2	
	0.52 - 2.7	1415	17800	3	2	
	0.45 - 2.3	1657	20900	3	2	
	0.40 - 2.1	1854	23300	3	2	
	0.35 - 1.8	2123	26700	3	2	**K97R57 VU01 DT80N4**
	0.31 - 1.6	2419	30400	3	2	
	0.27 - 1.4	2757	34200	3	3	
	0.26 - 1.6	1625	31200	3	2	**K97R57 VU11 DT90S6**
	0.23 - 1.4	1856	35600	3	2	
	0.22 - 1.3	1939	36700	3	3	**K107R77 VU11 DT90S6**
	0.19 - 1.1	2286	43200	3	3	
	0.17 - 0.97	2599	49200	3	3	
	0.14 - 0.85	2977	56300	3	3	
	0.13 - 0.75	3358	63500	3	3	
	0.11 - 0.65	3889	73500	3	3	**K127R77 VU11 DT90S6**
	0.10 - 0.57	4423	83600	3	3	
	0.09 - 0.50	5027	95100	3	3	
	0.07 - 0.44	5804	109800	3	3	

6:1

Input/Output P_n / P_{a2} HP	Speed Range n_{a1} - n_{a2} rpm	Gear Ratio *i*	Output Torque T_{a2} lb-in	Gear Stages Pri	Gear Stages Sec	Model
1.50/1.20	121 - 738	5.36	103	3	-	**K37 VU11 DT90S4**
	102 - 621	6.37	122	3	-	
	95 - 582	6.80	131	3	-	
	81 - 497	7.96	153	3	-	
	73 - 444	8.91	171	3	-	
	62 - 377	10.49	200	3	-	
	53 - 326	12.14	235	3	-	
	49 - 302	13.08	250	3	-	
	42 - 258	15.31	295	3	-	
	38 - 231	17.15	330	3	-	
	32 - 196	20.19	390	3	-	
	28 - 169	23.36	450	3	-	
	26 - 158	24.99	480	3	-	
	22 - 137	28.83	555	3	-	
	18 - 111	35.57	685	3	-	
	17 - 104	37.97	730	3	-	
	15 - 89	44.46	850	3	-	
	13 - 79	49.79	960	3	-	
	11 - 68	58.60	1130	3	-	
	9.5 - 58	67.80	1300	3	-	
	8.9 - 55	72.54	1390	3	-	
	7.7 - 47	83.69	1610	3	-	

Please consult your SEW-Eurodrive Assembly Center for additional speed (RPM) selections and dimension pages not listed.

آتور صنعت ATOORSANAT
SEW EURODRIVE

6:1

Input/Output P_n / P_{a2} HP	Speed Range n_{a1} - n_{a2} rpm	Gear Ratio *i*	Output Torque T_{a2} lb-in	Gear Stages Pri	Gear Stages Sec	Model
1.50/1.20	7.6 - 46	85.12	1640	3	-	**K47 VU11 DT90S4**
	7.1 - 44	90.86	1750	3	-	
	6.2 - 38	104.37	2010	3	-	
	6.0 - 37	108.29	2080	3	-	**K57 VU11 DT90S4**
	5.2 - 32	123.85	2380	3	-	
	5.0 - 31	128.52	2470	3	-	**K77 VU11 DT90S4**
	4.8 - 29	135.28	2600	3	-	
	4.2 - 26	154.02	2960	3	-	
	4.1 - 25	104.37	3050	3	-	**K47 VU11 DT90L6**
	4.0 - 24	108.29	3170	3	-	**K57 VU11 DT90L6**
	3.5 - 21	123.85	3620	3	-	
	3.4 - 20	128.52	3760	3	-	**K77 VU11 DT90L6**
	3.2 - 19	135.28	3960	3	-	
	2.8 - 17	154.02	4510	3	-	
1.50/1.10	2.6 - 16	246	4380	3	2	**K57R37 VU11 DT90S4**
	2.3 - 14	280	4990	3	2	
	2.0 - 12	323	5760	3	2	**K67R37 VU11 DT90S4**
	1.8 - 11	361	6430	3	2	
	1.5 - 9.2	428	7630	3	2	**K77R37 VU11 DT90S4**
	1.3 - 8.2	485	8640	3	2	
	1.2 - 7.2	552	9840	3	2	
	1.0 - 6.4	622	11100	3	2	
	0.91 - 5.6	709	12600	3	2	
	0.89 - 5.4	726	12900	3	2	**K87R57 VU11 DT90S4**
	0.77 - 4.7	837	14900	3	2	
	0.68 - 4.2	951	17000	3	2	
	0.60 - 3.7	1078	19200	3	2	
	0.53 - 3.2	1229	21900	3	2	
	0.51 - 3.1	1261	22500	3	2	**K97R57 VU11 DT90S4**
	0.45 - 2.8	1430	25500	3	2	
	0.40 - 2.4	1625	29000	3	2	
	0.35 - 2.1	1856	33100	3	2	
	0.30 - 1.9	2123	37800	3	2	
	0.28 - 1.7	2286	40100	3	3	**K107R77 VU11 DT90S4**
	0.25 - 1.5	2599	45600	3	3	
	0.22 - 1.3	2977	52300	3	3	
	0.19 - 1.2	3358	59000	3	3	
	0.17 - 1.0	3810	66900	3	3	
	0.15 - 0.89	4423	77700	3	3	**K127R77 VU11 DT90S4**
	0.13 - 0.79	5027	88300	3	3	
	0.11 - 0.68	5804	101900	3	3	
2.00/1.60	121 - 738	5.36	141	3	-	**K37 VU11 DT90L4**
	102 - 621	6.37	167	3	-	
	95 - 582	6.80	179	3	-	
	81 - 497	7.96	210	3	-	
	73 - 444	8.91	235	3	-	
	62 - 377	10.49	275	3	-	
	53 - 326	12.14	320	3	-	
	49 - 302	13.08	345	3	-	
	42 - 258	15.31	400	3	-	
	38 - 231	17.15	450	3	-	
	32 - 196	20.19	530	3	-	
	28 - 169	23.36	615	3	-	
	26 - 158	24.99	655	3	-	
	22 - 137	28.83	755	3	-	

Please consult your SEW-Eurodrive Assembly Center for additional speed (RPM) selections and dimension pages not listed.

آتور صنعت
ATOORSANAT

6:1						
Input/Output P_n / P_{a2} HP	Speed Range n_{a1} - n_{a2} rpm	Gear Ratio *i*	Output Torque T_{a2} lb-in	Gear Stages Pri	Gear Stages Sec	Model
2.00/1.60	18 - 111	35.57	930	3	-	
	17 - 104	37.97	1000	3	-	
	15 - 89	44.46	1170	3	-	**K37 VU11 DT90L4**
	13 - 79	49.79	1310	3	-	
	11 - 68	58.60	1540	3	-	
	10 - 62	63.30	1660	3	-	
	9.3 - 57	69.84	1830	3	-	
	8.6 - 53	75.20	1980	3	-	**K47 VU11 DT90L4**
	7.6 - 46	85.12	2240	3	-	
	7.1 - 44	90.86	2390	3	-	
	6.9 - 42	94.00	2290	3	2	**K47R37 VU11 DT90L4**
	6.5 - 40	99.00	2410	3	2	
	6.2 - 38	104.37	2740	3	-	**K47 VU11 DT90L4**
	5.8 - 35	112	2730	3	2	**K47R37 VU11 DT90L4**
	4.9 - 30	131	3190	3	2	
	4.5 - 27	145	3530	3	2	
	3.9 - 24	166	4040	3	2	**K57R37 VU11 DT90L4**
	3.4 - 21	192	4680	3	2	
	3.0 - 18	215	5240	3	2	
	2.6 - 16	246	5990	3	2	**K67R37 VU11 DT90L4**
	2.3 - 14	279	6800	3	2	
	2.2 - 14	290	7060	3	2	
	2.0 - 12	328	7990	3	2	
	1.8 - 11	367	8940	3	2	**K77R37 VU11 DT90L4**
	1.5 - 9.2	428	10400	3	2	
	1.3 - 8.2	485	11800	3	2	
	1.2 - 7.2	552	13400	3	2	
	1.0 - 6.2	638	15500	3	2	
	0.89 - 5.4	726	17700	3	2	**K87R57 VU11 DT90L4**
	0.77 - 4.7	837	20400	3	2	
	0.68 - 4.2	951	23200	3	2	
	0.59 - 3.6	1102	26800	3	2	
	0.51 - 3.1	1261	30700	3	2	**K97R57 VU11 DT90L4**
	0.45 - 2.8	1430	34800	3	2	
	0.42 - 2.5	1554	37900	3	2	
	0.38 - 2.3	1713	41700	3	2	
	0.33 - 2.0	1939	46500	3	3	**K107R77 VU11 DT90L4**
	0.28 - 1.7	2286	54900	3	3	
	0.25 - 1.5	2599	62400	3	3	
	0.22 - 1.3	3009	72200	3	3	
	0.20 - 1.2	3311	79400	3	3	**K127R77 VU11 DT90L4**
	0.17 - 1.0	3889	93300	3	3	
	0.15 - 0.89	4423	106100	3	3	
3.00/2.50	106 - 654	5.81	230	3	-	
	93 - 578	6.58	265	3	-	
	83 - 516	7.36	295	3	-	
	72 - 444	8.56	340	3	-	
	67 - 418	9.10	365	3	-	
	58 - 360	10.56	425	3	-	**K47 VU21 DT100LS4**
	52 - 323	11.77	470	3	-	
	50 - 312	12.19	490	3	-	
	45 - 279	13.65	545	3	-	
	39 - 240	15.86	635	3	-	
	36 - 225	16.86	675	3	-	

Please consult your SEW-Eurodrive Assembly Center for additional speed (RPM) selections and dimension pages not listed.

آتور صنعت ATOORSANAT SEW EURODRIVE

6:1						
Input/Output P_n / P_{a2} HP	Speed Range n_{a1} - n_{a2} rpm	Gear Ratio *i*	Output Torque T_{a2} lb-in	Gear Stages Pri	Gear Stages Sec	Model
3.00/2.50	31 - 194	19.58	785	3	-	**K47 VU21 DT100LS4**
	28 - 174	21.81	870	3	-	
	26 - 158	24.06	960	3	-	
	24 - 147	25.91	1040	3	-	
	21 - 130	29.32	1170	3	-	
	20 - 121	31.30	1250	3	-	
	17 - 107	35.39	1420	3	-	
	15 - 96	39.61	1590	3	-	
	13 - 83	46.03	1840	3	-	
	11 - 67	56.83	2270	3	-	
	9.7 - 60	63.30	2530	3	-	
	8.8 - 54	69.84	2790	3	-	
	8.2 - 51	75.20	3010	3	-	
	7.2 - 45	85.12	3410	3	-	
	6.8 - 42	90.26	3610	3	-	**K57 VU21 DT100LS4**
	6.0 - 37	102.88	4120	3	-	
	5.7 - 35	108.29	4330	3	-	
	5.4 - 33	113.56	4540	3	-	**K77 VU21 DT100LS4**
	4.8 - 30	128.52	5140	3	-	
	4.5 - 28	135.28	5410	3	-	
	4.2 - 26	147.32	5890	3	-	**K87 VU21 DT100LS4**
	3.7 - 23	164.34	6580	3	-	
	3.5 - 22	174.19	6970	3	-	
	3.2 - 19	126.91	7840	3	-	**K87 VU31 DV112M6**
	2.9 - 18	140.28	8660	3	-	**K97 VU31 DV112M6**
	2.7 - 16	153.21	9460	3	-	
3.00/2.30	2.6 - 16	236	8760	3	2	**K87RF57 VU21 DT100LS4**
	2.5 - 15	250	9280	3	2	
	2.1 - 13	294	10900	3	2	
	1.9 - 12	330	12200	3	2	
	1.6 - 10	373	13800	3	2	
	1.4 - 8.9	426	15800	3	2	
	1.3 - 8.0	474	17600	3	2	
	1.1 - 6.8	562	20900	3	2	
	0.96 - 6.0	638	23700	3	2	
	0.94 - 5.8	652	24200	3	2	**K97RF57 VU21 DT100LS4**
	0.83 - 5.1	743	27600	3	2	
	0.72 - 4.4	855	31700	3	2	
	0.64 - 4.0	957	35500	3	2	
	0.60 - 3.7	1030	38200	3	2	**K107RF77 VU21 DT100LS4**
	0.53 - 3.3	1166	43300	3	2	
	0.46 - 2.8	1336	49600	3	2	
	0.39 - 2.4	1554	57700	3	2	
	0.36 - 2.2	1713	63600	3	2	
	0.35 - 2.2	1757	65200	3	2	**K127RF77 VU21 DT100LS4**
	0.32 - 2.0	1926	71500	3	2	
	0.27 - 1.7	2268	82900	3	3	
	0.24 - 1.5	2607	95300	3	3	
	0.20 - 1.3	3009	110000	3	3	
	0.19 - 1.1	2182	92925	3	2	**K167R97 VU31 DV112M6**
	0.18 - 1.1	2263	125670	3	3	
	0.15 - 0.91	2755	153105	3	3	
	0.12 - 0.74	3376	141600	3	3	
	0.10 - 0.61	4079	227445	3	3	
	0.09 - 0.52	4788	201780	3	3	

Please consult your SEW-Eurodrive Assembly Center for additional speed (RPM) selections and dimension pages not listed.

آتور صنعت
ATOORSANAT

6:1

Input/Output P_n / P_{a2} HP	Speed Range n_{a1} - n_{a2} rpm	Gear Ratio *i*	Output Torque T_{a2} lb-in	Gear Stages Pri	Gear Stages Sec	Model
3.00/2.30	0.09 - 0.57	4370	243375	3	3	**K187R97 VU31 DV112M6**
	0.08 - 0.47	5358	298245	3	3	
	0.07 - 0.42	5991	252225	3	3	
	0.06 - 0.37	6747	376125	3	3	
5.00/4.00	84 - 498	7.28	510	3	-	**K67 VU31 DT100L4**
	73 - 434	8.37	585	3	-	
	63 - 376	9.66	675	3	-	
	57 - 341	10.63	745	3	-	
	49 - 291	12.48	870	3	-	
	46 - 275	13.22	920	3	-	
	40 - 239	15.19	1060	3	-	
	35 - 207	17.54	1230	3	-	
	32 - 188	19.30	1350	3	-	
	27 - 160	22.66	1580	3	-	
	25 - 151	24.00	1680	3	-	
	22 - 133	27.28	1910	3	-	
	20 - 120	30.22	2110	3	-	
	16 - 95	38.39	2680	3	-	
	14 - 82	44.32	3100	3	-	
	13 - 74	48.77	3410	3	-	
	11 - 63	57.28	4000	3	-	
	10 - 60	60.66	4240	3	-	
	8.9 - 53	68.95	4820	3	-	
	8.0 - 48	76.37	5340	3	-	
	7.8 - 46	78.07	5450	3	-	**K77 VU31 DT100L4**
	6.9 - 41	88.97	6220	3	-	
	6.3 - 37	97.05	6780	3	-	
	5.9 - 35	102.71	7180	3	-	**K87 VU31 DT100L4**
	5.3 - 31	115.82	8090	3	-	
	4.8 - 29	126.91	8870	3	-	
	4.3 - 26	141	9130	3	2	**K87RF57 VU31 DT100L4**
	3.8 - 23	159	10300	3	2	
	3.3 - 20	183	11900	3	2	
	3.0 - 18	201	13000	3	2	
	2.6 - 15	236	15300	3	2	
	2.4 - 15	250	16200	3	2	
	2.1 - 12	294	19000	3	2	
	1.8 - 11	330	21400	3	2	
	1.6 - 9.5	382	24700	3	2	**K97RF57 VU31 DT100L4**
	1.4 - 8.3	437	28300	3	2	
	1.2 - 7.2	504	32600	3	2	
	1.1 - 6.3	573	37100	3	2	
	0.99 - 5.9	615	39800	3	2	**K107RF77 VU31 DT100L4**
	0.88 - 5.2	696	45100	3	2	
	0.77 - 4.6	793	51400	3	2	
	0.68 - 4.0	904	58600	3	2	
	0.59 - 3.5	1030	66700	3	2	
	0.52 - 3.1	1177	76200	3	2	**K127RF77 VU31 DT100L4**
	0.45 - 2.7	1342	86900	3	2	
	0.40 - 2.4	1541	99800	3	2	
	0.35 - 2.1	1757	113800	3	2	
	0.34 - 2.0	1805	115200	3	3	**K157RF97 VU31 DT100L4**
	0.30 - 1.8	2029	129500	3	3	
	0.26 - 1.6	2322	148100	3	3	

Please consult your SEW-Eurodrive Assembly Center for additional speed (RPM) selections and dimension pages not listed.

آتور صنعت ATOORSANAT
SEW EURODRIVE

6:1

Input/Output P_n / P_{a2} HP	Speed Range n_{a1} - n_{a2} rpm	Gear Ratio *i*	Output Torque T_{a2} lb-in	Gear Stages Pri	Gear Stages Sec	Model
5.00/4.00	0.22 - 1.3	2755	176115	3	3	
	0.18 - 1.1	3376	215055	3	3	**K167R97 VU31 DT100L4**
	0.15 - 0.89	4079	260190	3	3	
	0.14 - 0.83	4370	278775	3	3	
	0.13 - 0.75	4817	307095	3	3	
	0.11 - 0.68	5358	341610	3	3	**K187R97 VU31 DT100L4**
	0.10 - 0.61	5991	382320	3	3	
	0.09 - 0.54	6747	430995	3	3	
5.40/4.10	1.7 - 10	369	25576.5	3	2	
	1.3 - 7.8	481	33276	3	2	
	0.97 - 5.9	632	43719	3	2	
	0.81 - 4.9	757	52392	3	2	
	0.73 - 4.4	843	58321.5	3	2	
	0.65 - 4.0	944	65313	3	2	
	0.56 - 3.4	1101	76198.5	3	2	
	0.47 - 2.9	1296	89385	3	2	**K167R97 VU31 DV112M4**
	0.44 - 2.7	1408	97350	3	2	
	0.36 - 2.2	1704	117705	3	2	
	0.28 - 1.7	2182	151335	3	2	
	0.27 - 1.7	2263	153990	3	3	
	0.22 - 1.4	2755	187620	3	3	
	0.18 - 1.1	3376	230100	3	3	
	0.15 - 0.92	4079	277890	3	3	
	0.14 - 0.86	4370	298245	3	3	
	0.13 - 0.78	4817	328335	3	3	**K187R97 VU31 DV112M4**
	0.11 - 0.70	5358	365505	3	3	
	0.10 - 0.62	5991	407985	3	3	
7.50/6.00	84 - 513	7.28	740	3	-	
	73 - 447	8.37	850	3	-	
	64 - 387	9.66	980	3	-	
	58 - 352	10.63	1080	3	-	
	49 - 299	12.48	1270	3	-	
	46 - 283	13.22	1350	3	-	
	40 - 246	15.19	1550	3	-	
	35 - 213	17.54	1780	3	-	
	32 - 194	19.30	1960	3	-	
	27 - 165	22.66	2310	3	-	**K67 VU31 DV132S4**
	26 - 156	24.00	2440	3	-	
	23 - 137	27.28	2780	3	-	
	20 - 124	30.22	3080	3	-	
	16 - 97	38.39	3910	3	-	
	14 - 84	44.32	4510	3	-	
	13 - 77	48.77	4960	3	-	
	11 - 65	57.28	5830	3	-	
	10 - 62	60.66	6170	3	-	
	8.9 - 54	68.95	7020	3	-	
	8.3 - 51	73.99	7530	3	-	
	7.9 - 48	78.07	7940	3	-	**K77 VU31 DV132S4**
	6.9 - 42	88.97	9050	3	-	
	6.3 - 39	97.05	9880	3	-	
	6.0 - 36	102.71	10500	3	-	
	5.3 - 32	115.82	11800	3	-	**K87 VU31 DV132S4**
	4.8 - 29	126.91	12900	3	-	
	4.4 - 27	140.28	14300	3	-	**K97 VU31 DV132S4**
	4.0 - 24	153.21	15600	3	-	

Please consult your SEW-Eurodrive Assembly Center for additional speed (RPM) selections and dimension pages not listed.

آتور صنعت
ATOORSANAT

6:1						
Input/Output P_n / P_{a2} HP	Speed Range n_{a1} - n_{a2} rpm	Gear Ratio *i*	Output Torque T_{a2} lb-in	Gear Stages Pri	Gear Stages Sec	Model
7.50/5.60	2.6 - 16	236	22300	3	2	**K87RF57 VU31 DV132S4**
	2.5 - 15	250	23600	3	2	
	2.4 - 14	258	24300	3	2	**K97RF57 VU31 DV132S4**
	2.0 - 12	305	28800	3	2	
	1.8 - 11	342	32300	3	2	
	1.6 - 9.8	382	36000	3	2	
	1.5 - 9.2	408	38500	3	2	**K107RF77 VU31 DV132S4**
	1.3 - 8.1	461	43500	3	2	
	1.2 - 7.2	522	49300	3	2	
	1.0 - 6.1	615	58000	3	2	
	0.88 - 5.4	696	65700	3	2	
	0.87 - 5.3	704	66400	3	2	**K127RF77 VU31 DV132S4**
	0.78 - 4.7	790	74500	3	2	
	0.68 - 4.2	899	84800	3	2	
	0.60 - 3.6	1025	96700	3	2	
	0.52 - 3.2	1177	111100	3	2	
	0.50 - 3.0	1229	116000	3	2	**K157RF97 VU31 DV132S4**
	0.45 - 2.7	1365	128800	3	2	
	0.37 - 2.3	1659	156500	3	2	
	0.27 - 1.6	2263	211515	3	3	**K167R97 VU31 DV132S4**
	0.22 - 1.3	2755	257535	3	3	
	0.20 - 1.2	3062	290280	3	2	**K187R97 VU31 DV132S4**
	0.17 - 1.0	3609	342495	3	2	
	0.14 - 0.85	4370	408870	3	3	
10.00/8.30	84 - 509	7.24	1030	3	-	**K77 VU41 DV132M4**
	71 - 435	8.48	1200	3	-	
	63 - 386	9.56	1360	3	-	
	56 - 340	10.84	1540	3	-	
	49 - 299	12.36	1750	3	-	
	45 - 273	13.52	1920	3	-	
	38 - 233	15.84	2250	3	-	
	34 - 206	17.87	2540	3	-	
	30 - 182	20.25	2880	3	-	
	26 - 160	23.08	3280	3	-	
	24 - 144	25.62	3640	3	-	
	21 - 126	29.27	4160	3	-	
	20 - 119	30.89	4390	3	-	
	15 - 92	40.04	5690	3	-	
	13 - 82	45.16	6410	3	-	
	12 - 72	51.18	7270	3	-	
	10 - 63	58.34	8290	3	-	
	9.3 - 57	64.75	9200	3	-	
	8.2 - 50	73.99	10500	3	-	
	7.8 - 47	78.07	11100	3	-	
	7.6 - 46	79.34	11300	3	-	**K87 VU41 DV132M4**
	7.0 - 43	86.34	12300	3	-	
	5.9 - 36	102.71	14600	3	-	
	5.8 - 35	105.13	14900	3	-	**K97 VU41 DV132M4**
	4.9 - 30	123.93	17600	3	-	
	4.2 - 26	143.47	20400	3	-	**K107 VU41 DV132M4**
10.00/7.80	2.7 - 17	222	29200	3	2	**K107RF77 VU41 DV132M4**
	2.4 - 15	251	33100	3	2	
	2.1 - 13	286	37700	3	2	
	1.9 - 12	318	41900	3	2	
	1.7 - 10	364	47900	3	2	

Please consult your SEW-Eurodrive Assembly Center for additional speed (RPM) selections and dimension pages not listed.

آتور صنعت ATOORSANAT SEW EURODRIVE

6:1

Input/Output P_n / P_{a2} HP	Speed Range n_{a1} - n_{a2} rpm	Gear Ratio *i*	Output Torque T_{a2} lb-in	Gear Stages Pri	Gear Stages Sec	Model
10.00/7.80	1.5 - 9.0	408	53700	3	2	**K107RF77 VU41 DV132M4**
	1.3 - 8.0	461	60700	3	2	
	1.2 - 7.1	522	68700	3	2	
	1.1 - 6.7	549	72300	3	2	**K127RF77 VU41 DV132M4**
	0.99 - 6.0	610	80300	3	2	
	0.86 - 5.2	704	92700	3	2	
	0.77 - 4.7	790	104000	3	2	
	0.71 - 4.3	854	112500	3	2	**K157RF97 VU41 DV132M4**
	0.64 - 3.9	942	124000	3	2	
	0.55 - 3.4	1093	143900	3	2	
10.00/7.70	0.47 - 2.8	1296	170805	3	2	**K167R97 VU41 DV132M4**
	0.36 - 2.2	1704	224790	3	2	
	0.29 - 1.8	2054	270810	3	2	**K187R97 VU41 DV132M4**
	0.27 - 1.6	2268	299130	3	2	
	0.24 - 1.5	2519	331875	3	2	
	0.21 - 1.3	2818	365505	3	3	
	0.20 - 1.2	3062	403560	3	2	
12.50/9.30	5.1 - 31	118	18762	3	2	**K167R107 VU41 DV132ML4**
	4.5 - 27	135	21505.5	3	2	
	3.8 - 23	160	25488	3	2	
	2.8 - 17	213	33895.5	3	2	
	2.5 - 15	244	38851.5	3	2	
	2.2 - 13	278	44338.5	3	2	
	1.9 - 12	318	50710.5	3	2	
	1.6 - 10	369	58764	3	2	**K167R97 VU41 DV132ML4**
	1.4 - 8.7	423	67437	3	2	
	1.3 - 7.7	481	76641	3	2	
	1.1 - 6.6	561	89385	3	2	
	0.96 - 5.8	632	100890	3	2	
	0.80 - 4.9	757	120360	3	2	
	0.72 - 4.4	843	134520	3	2	
	0.64 - 3.9	944	150450	3	2	
	0.55 - 3.4	1101	175230	3	2	
	0.47 - 2.8	1296	206205	3	2	
	0.43 - 2.6	1408	223905	3	2	
	0.36 - 2.2	1704	271695	3	2	
	0.33 - 2.0	1821	290280	3	2	**K187R97 VU41 DV132ML4**
	0.29 - 1.8	2054	327450	3	2	
	0.27 - 1.6	2268	361080	3	2	
	0.24 - 1.5	2519	401790	3	2	
	0.21 - 1.3	2818	442500	3	3	
15.00/12.10	84 - 509	7.24	1490	3	-	**K77 VU41 DV160M4**
	71 - 435	8.48	1750	3	-	
	63 - 386	9.56	1970	3	-	
	56 - 340	10.84	2230	3	-	
	49 - 299	12.36	2550	3	-	
	45 - 273	13.52	2790	3	-	
	38 - 233	15.84	3270	3	-	
	34 - 206	17.87	3680	3	-	
	30 - 182	20.25	4170	3	-	
	26 - 160	23.08	4760	3	-	
	24 - 144	25.62	5280	3	-	
	21 - 126	29.27	6030	3	-	
	20 - 119	30.89	6370	3	-	
	15 - 92	40.04	8250	3	-	

Please consult your SEW-Eurodrive Assembly Center for additional speed (RPM) selections and dimension pages not listed.

آتور صنعت
ATOORSANAT

6:1

Input/Output P_n / P_{a2} HP	Speed Range n_{a1} - n_{a2} rpm	Gear Ratio *i*	Output Torque T_{a2} lb-in	Gear Stages Pri	Gear Stages Sec	Model
15.00/12.10	13 - 82	45.16	9310	3	-	**K77 VU41 DV160M4**
	12 - 72	51.18	10600	3	-	
	10 - 63	58.34	12000	3	-	
	9.3 - 57	64.75	13300	3	-	
	8.6 - 52	70.46	14500	3	-	**K87 VU41 DV160M4**
	7.6 - 46	79.34	16400	3	-	
	7.0 - 43	86.34	17800	3	-	
	5.9 - 36	102.71	21200	3	-	
	5.8 - 35	105.13	21700	3	-	**K97 VU41 DV160M4**
	4.9 - 30	123.93	25600	3	-	
15.00/11.30	4.3 - 26	140	26800	3	2	**K107RF77 VU41 DV160M4**
	3.9 - 24	154	29400	3	2	
	3.5 - 21	174	33300	3	2	
	3.1 - 19	196	37500	3	2	
	2.7 - 17	222	42400	3	2	
	2.4 - 15	251	48000	3	2	
	2.1 - 13	286	54700	3	2	
	1.9 - 12	318	60800	3	2	
	1.7 - 10	364	69600	3	2	
	1.6 - 10	367	70200	3	2	**K127RF87 VU41 DV160M4**
	1.4 - 8.8	418	79900	3	2	**K127RF77 VU41 DV160M4**
	1.3 - 7.7	477	91200	3	2	
	1.1 - 6.7	549	104900	3	2	
	0.92 - 5.6	661	126400	3	2	**K157RF97 VU41 DV160M4**
	0.80 - 4.9	756	144500	3	2	
15.00/11.20	0.72 - 4.4	843	161070	3	2	**K167R97 VU41 DV160M4**
	0.64 - 3.9	944	180540	3	2	
	0.55 - 3.4	1101	210630	3	2	
	0.47 - 2.8	1296	247800	3	2	
	0.43 - 2.6	1408	269040	3	2	
	0.38 - 2.3	1605	307095	3	2	**K187R97 VU41 DV160M4**
	0.33 - 2.0	1821	347805	3	2	
	0.29 - 1.8	2054	392940	3	2	
	0.27 - 1.6	2268	433650	3	2	
20.00/16.50	86 - 517	7.21	2010	3	-	**K87 VU51 DV160L4**
	74 - 450	8.29	2310	3	-	
	62 - 373	10.00	2780	3	-	
	55 - 334	11.17	3110	3	-	
	49 - 297	12.56	3500	3	-	
	43 - 258	14.45	4020	3	-	
	39 - 233	16.00	4460	3	-	
	35 - 214	17.42	4850	3	-	
	32 - 192	19.45	5420	3	-	
	28 - 167	22.41	6240	3	-	
	25 - 150	24.92	6940	3	-	
	22 - 134	27.88	7760	3	-	
	20 - 119	31.39	8740	3	-	
	17 - 102	36.52	10200	3	-	
	14 - 85	44.02	12300	3	-	
	13 - 76	49.16	13700	3	-	
	11 - 66	56.64	15800	3	-	
	9.8 - 59	63.00	17500	3	-	
	8.8 - 53	70.46	19600	3	-	
	7.8 - 47	79.34	22100	3	-	

Please consult your SEW-Eurodrive Assembly Center for additional speed (RPM) selections and dimension pages not listed.

آتور صنعت ATOORSANAT SEW EURODRIVE

6:1

Input/Output P_n / P_{a2} HP	Speed Range n_{a1} - n_{a2} rpm	Gear Ratio *i*	Output Torque T_{a2} lb-in	Gear Stages Pri	Gear Stages Sec	Model
20.00/16.50	7.1 - 43	86.52	24100	3	-	**K97 VU51 DV160L4**
	6.4 - 39	96.80	27000	3	-	
	6.1 - 37	100.75	28100	3	-	**K107 VU51 DV160L4**
	5.5 - 33	112.41	31300	3	-	
	5.0 - 30	122.48	34100	3	-	**K127 VU51 DV160L4**
	4.5 - 27	136.14	37900	3	-	
20.00/15.30	2.9 - 18	213	55000	3	2	**K127RF87 VU51 DV160L4**
	2.4 - 15	253	65300	3	2	
	2.2 - 13	287	74100	3	2	
	1.9 - 11	330	85200	3	2	
	1.7 - 10	367	94800	3	2	
	1.5 - 8.9	418	108000	3	2	
	1.4 - 8.6	434	112100	3	2	**K157RF97 VU51 DV160L4**
	1.2 - 7.4	504	130200	3	2	
	1.1 - 6.6	567	146400	3	2	
20.00/15.20	0.98 - 5.9	632	162840	3	2	**K167R97 VU51 DV160L4**
	0.82 - 4.9	757	195585	3	2	
	0.73 - 4.4	843	217710	3	2	
	0.65 - 4.0	944	244260	3	2	
	0.65 - 3.9	945	244260	3	2	**K187R97 VU51 DV160L4**
	0.59 - 3.6	1046	269925	3	2	
	0.52 - 3.1	1196	308865	3	2	
	0.44 - 2.7	1395	360195	3	2	
	0.38 - 2.3	1605	415065	3	2	
25.00/20.00	86 - 517	7.21	2480	3	-	**K87 VU51 DV180M4**
	74 - 450	8.29	2860	3	-	
	62 - 373	10.00	3440	3	-	
	55 - 334	11.17	3840	3	-	
	49 - 297	12.56	4320	3	-	
	43 - 258	14.45	4970	3	-	
	35 - 214	17.42	6000	3	-	
	32 - 192	19.45	6700	3	-	
	28 - 167	22.41	7710	3	-	
	25 - 150	24.92	8580	3	-	
	22 - 134	27.88	9600	3	-	
	20 - 119	31.39	10800	3	-	
	17 - 102	36.52	12600	3	-	
	14 - 85	44.02	15200	3	-	
	13 - 76	49.16	16900	3	-	
	11 - 66	56.64	19500	3	-	
	9.8 - 59	63.00	21700	3	-	
	8.8 - 53	70.54	24300	3	-	**K97 VU51 DV180M4**
	7.9 - 48	77.89	26800	3	-	
	7.1 - 43	86.52	29800	3	-	
	6.4 - 39	96.80	33300	3	-	
	6.1 - 37	100.75	34700	3	-	**K107 VU51 DV180M4**
	5.5 - 33	112.41	38700	3	-	
	5.0 - 30	122.48	42200	3	-	**K127 VU51 DV180M4**
	4.5 - 27	136.14	46900	3	-	
25.00/19.00	4.2 - 25	147	46900	3	2	**K127RF87 VU51 DV180M4**
	3.7 - 22	166	53000	3	2	
	3.1 - 19	200	63800	3	2	
	2.9 - 18	213	68000	3	2	
	2.4 - 15	253	80800	3	2	
	2.2 - 13	287	91600	3	2	

Please consult your SEW-Eurodrive Assembly Center for additional speed (RPM) selections and dimension pages not listed.

آتور صنعت ATOORSANAT

6:1						
Input/Output P_n / P_{a2} HP	Speed Range n_{a1} - n_{a2} rpm	Gear Ratio *i*	Output Torque T_{a2} lb-in	Gear Stages Pri	Gear Stages Sec	Model
25.00/19.00	1.9 - 11	330	105300	3	2	**K127RF87 VU51 DV180M4**
	1.6 - 9.8	379	121000	3	2	**K157RF97 VU51 DV180M4**
	1.4 - 8.6	434	138500	3	2	
	1.3 - 7.8	481	153990	3	2	**K167R97 VU51 DV180M4**
	1.1 - 6.7	561	178770	3	2	
	0.98 - 5.9	632	201780	3	2	
	0.82 - 4.9	757	241605	3	2	
	0.73 - 4.4	843	269040	3	2	
	0.65 - 3.9	945	301785	3	2	**K187R97 VU51 DV180M4**
	0.59 - 3.6	1046	333645	3	2	
	0.52 - 3.1	1196	381435	3	2	
30.00/24.00	86 - 517	7.21	2940	3	-	**K87 VU51 DV180L4**
	74 - 450	8.29	3380	3	-	
	62 - 373	10.00	4080	3	-	
	55 - 334	11.17	4550	3	-	
	49 - 297	12.56	5120	3	-	
	43 - 258	14.45	5890	3	-	
	39 - 233	16.00	6520	3	-	
	35 - 214	17.42	7100	3	-	
	32 - 192	19.45	7930	3	-	
	28 - 167	22.41	9130	3	-	
	25 - 150	24.92	10200	3	-	
	22 - 134	27.88	11400	3	-	
	20 - 119	31.39	12800	3	-	
	17 - 102	36.52	14900	3	-	
	14 - 85	44.02	17900	3	-	
	13 - 76	49.16	20000	3	-	
	11 - 66	56.64	23100	3	-	
	9.9 - 60	62.55	25500	3	-	**K97 VU51 DV180L4**
	8.8 - 53	70.54	28800	3	-	
	7.9 - 48	77.89	31800	3	-	
	7.1 - 43	86.52	35300	3	-	
	6.8 - 41	90.96	37100	3	-	**K107 VU51 DV180L4**
	6.1 - 37	100.75	41100	3	-	
	5.5 - 33	112.41	45800	3	-	
	5.0 - 30	122.48	49900	3	-	**K127 VU51 DV180L4**
	4.5 - 27	136.14	55500	3	-	
30.00/23.00	4.2 - 25	147	55600	3	2	**K127RF87 VU51 DV180L4**
	3.7 - 22	166	62700	3	2	
	3.1 - 19	200	75600	3	2	
	2.9 - 18	213	80500	3	2	
	2.4 - 15	253	95600	3	2	
	2.2 - 13	287	108500	3	2	
	2.1 - 13	291	110000	3	2	**K157RF97 VU51 DV180L4**
	1.9 - 11	333	125900	3	2	
	1.6 - 9.8	379	143200	3	2	
30.00/22.00	1.5 - 8.8	423	160185	3	2	**K167R97 VU51 DV180L4**
	1.3 - 7.8	481	181425	3	2	
	1.1 - 6.7	561	212400	3	2	
	0.98 - 5.9	632	238950	3	2	
	0.84 - 5.1	738	278775	3	2	**K187R97 VU51 DV180L4**
	0.65 - 3.9	945	357540	3	2	
	0.59 - 3.6	1046	395595	3	2	

Please consult your SEW-Eurodrive Assembly Center for additional speed (RPM) selections and dimension pages not listed.

آتور صنعت ATOORSANAT
SEW EURODRIVE

4:1

Input/Output P_n / P_{a2} HP	Speed Range n_{a1} - n_{a2} rpm	Gear Ratio *i*	Output Torque T_{a2} lb-in	Gear Stages Pri	Gear Stages Sec	Model
40.00/34.00	76 - 348	8.69	6070	3	-	
	66 - 305	9.94	6940	3	-	
	56 - 258	11.73	8190	3	-	
	49 - 225	13.43	9370	3	-	
	45 - 207	14.64	10200	3	-	
	39 - 181	16.75	11700	3	-	
	33 - 153	19.74	13800	3	-	
	29 - 134	22.62	15800	3	-	
	25 - 115	26.32	18400	3	-	
	23 - 104	29.00	20200	3	-	
	21 - 97	31.28	21800	3	-	**K107 VU6 DV200L4**
	20 - 93	32.69	22800	3	-	
	18 - 82	37.00	25800	3	-	
	16 - 72	42.33	29500	3	-	
	13 - 61	49.90	34800	3	-	
	12 - 53	57.17	39900	3	-	
	9.9 - 46	66.52	46400	3	-	
	9.0 - 41	73.30	51100	3	-	
	8.0 - 37	82.61	57600	3	-	
	7.2 - 33	90.96	63500	3	-	
	6.0 - 27	110.18	76900	3	-	**K127 VU6 DV200L4**
	5.4 - 25	122.39	85400	3	-	**K157 VU6 DV200L4**
40.00/31.00	4.2 - 19	157	101600	3	2	
	3.5 - 16	187	121000	3	2	**K157R107 VU6 DV200L4**
	3.1 - 14	213	137800	3	2	
	2.9 - 13	230	148800	3	2	
	2.7 - 12	244	157530	3	2	
	2.4 - 11	278	179655	3	2	**K167R107 VU6 DV200L4**
	2.1 - 9.5	318	206205	3	2	
	1.9 - 8.5	355	230100	3	2	
	1.4 - 6.7	454	293820	3	2	**K187R107 VU6 DV200L4**
	1.3 - 5.8	520	336300	3	2	
	1.1 - 4.9	622	402675	3	2	

3:1

Input/Output P_n / P_{a2} HP	Speed Range n_{a1} - n_{a2} rpm	Gear Ratio *i*	Output Torque T_{a2} lb-in	Gear Stages Pri	Gear Stages Sec	Model
50.00/40.00	95 - 288	8.69	8820	3	-	
	83 - 251	9.94	10100	3	-	
	70 - 213	11.73	11900	3	-	
	61 - 186	13.43	13600	3	-	
	56 - 171	14.64	14800	3	-	
	49 - 149	16.75	17000	3	-	
	42 - 127	19.74	20000	3	-	
	36 - 110	22.62	22900	3	-	
	31 - 95	26.32	26700	3	-	**K107 VU6 DV225S4**
	28 - 86	29.00	29400	3	-	
	26 - 80	31.28	31700	3	-	
	25 - 76	32.69	33200	3	-	
	22 - 68	37.00	37500	3	-	
	19 - 59	42.33	42900	3	-	
	17 - 50	49.90	50600	3	-	
	14 - 44	57.17	58000	3	-	
	12 - 38	66.52	67500	3	-	

Please consult your SEW-Eurodrive Assembly Center for additional speed (RPM) selections and dimension pages not listed.

آتور صنعت ATOORSANAT

3:1

Input/Output P_n / P_{a2} HP	Speed Range n_{a1} - n_{a2} rpm	Gear Ratio *i*	Output Torque T_{a2} lb-in	Gear Stages Pri	Gear Stages Sec	Model
50.00/40.00	10 - 30	81.98	83200	3	-	
	9.2 - 28	89.89	91200	3	-	**K127 VU6 DV225S4**
	7.5 - 23	110.18	111800	3	-	
	6.7 - 20	122.39	124100	3	-	**K157 VU6 DV225S4**
	6.1 - 19	134.99	137175	3	-	**K167 VU6 DV225S4**
50.00/36.00	5.3 - 16	157	147700	3	2	**K157R107 VU6 DV225S4**
	5.2 - 16	160	150450	3	2	
	4.6 - 14	180	169035	3	2	
	4.0 - 12	206	193815	3	2	**K167R107 VU6 DV225S4**
	3.9 - 12	213	200010	3	2	
	3.4 - 10	244	229215	3	2	
	3.0 - 9.0	278	261075	3	2	
	2.3 - 7.0	355	333645	3	2	**K187R107 VU6 DV225S4**
	1.8 - 5.5	454	427455	3	2	
60.00/50.00	95 - 288	8.69	10900	3	-	
	83 - 251	9.94	12400	3	-	
	70 - 213	11.73	14700	3	-	
	61 - 186	13.43	16800	3	-	
	56 - 171	14.64	18300	3	-	
	49 - 149	16.75	21000	3	-	
	42 - 127	19.74	24700	3	-	
	36 - 110	22.62	28300	3	-	**K107 VU6 DV225M4**
	31 - 95	26.32	32900	3	-	
	28 - 86	29.00	36300	3	-	
	26 - 80	31.28	39100	3	-	
	25 - 76	32.69	40900	3	-	
	22 - 68	37.00	46300	3	-	
	19 - 59	42.33	53000	3	-	
	17 - 50	49.90	62400	3	-	
	15 - 46	54.07	67600	3	-	
	13 - 40	62.60	78300	3	-	
	12 - 35	70.95	88800	3	-	**K127 VU6 DV225M4**
	10 - 30	81.98	102600	3	-	
	9.2 - 28	89.89	112500	3	-	
	9.0 - 27	91.65	114700	3	-	
	8.2 - 25	100.22	125400	3	-	**K157 VU6 DV225M4**
	6.7 - 20	122.39	153100	3	-	
60.00/45.00	6.1 - 19	135	156645	3	2	
	5.2 - 16	160	185850	3	2	
	4.6 - 14	180	208860	3	2	**K167R107 VU6 DV225M4**
	4.0 - 12	206	238950	3	2	
	3.9 - 12	213	246915	3	2	
	3.4 - 10	244	283200	3	2	
	3.2 - 9.6	261	302670	3	2	**K187R107 VU6 DV225M4**
	2.3 - 7	355	411525	3	2	

Please consult your SEW-Eurodrive Assembly Center for additional speed (RPM) selections and dimension pages not listed.

آتور صنعت ATOORSANAT
SEW EURODRIVE

7:1

Input/Output P_n / P_{a2} HP	Speed Range n_{a1} - n_{a2} rpm	Gear Ratio *i*	Output Torque T_{a2} lb-in	Gear Stages Pri	Gear Stages Sec	Model
1.00/0.83	80 - 564	5.36	93	3	-	
	68 - 475	6.37	110	3	-	
	63 - 445	6.80	118	3	-	
	54 - 380	7.96	138	3	-	
	48 - 339	8.91	154	3	-	
	41 - 288	10.49	182	3	-	
	35 - 249	12.14	210	3	-	
	33 - 231	13.08	225	3	-	
	28 - 198	15.31	265	3	-	
	25 - 176	17.15	295	3	-	
	21 - 150	20.19	350	3	-	
	18 - 130	23.36	405	3	-	**K37 VU11 DT90S6**
	17 - 121	24.99	435	3	-	
	15 - 105	28.83	500	3	-	
	14 - 101	29.96	520	3	-	
	12 - 85	35.57	615	3	-	
	11 - 80	37.97	660	3	-	
	9.7 - 68	44.46	770	3	-	
	8.6 - 61	49.79	860	3	-	
	7.3 - 52	58.60	1010	3	-	
	6.3 - 45	67.80	1170	3	-	
	5.9 - 42	72.54	1260	3	-	
	5.1 - 36	83.69	1450	3	-	
	4.7 - 33	90.86	1570	3	-	**K47 VU11 DT90S6**
	4.1 - 29	104.37	1810	3	-	
	4.0 - 28	108.29	1880	3	-	**K57 VU11 DT90S6**
	3.5 - 24	123.85	2140	3	-	
	3.3 - 24	128.52	2230	3	-	
	3.2 - 22	135.28	2340	3	-	**K77 VU11 DT90S6**
	2.8 - 20	154.02	2670	3	-	
1.00/0.78	2.5 - 18	171	2750	3	2	**K47RF37 VU11 DT90S6**
	2.2 - 15	198	3180	3	2	
	2.0 - 14	215	3450	3	2	
	1.7 - 12	246	3950	3	2	**K57RF37 VU11 DT90S6**
	1.5 - 11	280	4500	3	2	
	1.3 - 9.5	319	5120	3	2	
	1.2 - 8.4	361	5800	3	2	**K67RF37 VU11 DT90S6**
	1.0 - 7.2	420	6740	3	2	
	0.89 - 6.2	485	7790	3	2	
	0.78 - 5.5	552	8860	3	2	
	0.69 - 4.9	622	9990	3	2	**K77RF37 VU11 DT90S6**
	0.61 - 4.3	709	11400	3	2	
	0.53 - 3.7	815	13100	3	2	
	0.51 - 3.6	837	13400	3	2	
	0.45 - 3.2	951	15300	3	2	
	0.40 - 2.8	1078	17300	3	2	**K87RF57 VU11 DT90S6**
	0.35 - 2.5	1229	19700	3	2	
	0.30 - 2.1	1415	22700	3	2	
	0.26 - 1.9	1625	26100	3	2	
	0.23 - 1.6	1856	29800	3	2	**K97RF57 VU11 DT90S6**
	0.20 - 1.4	2123	34100	3	2	
	0.19 - 1.3	2286	36200	3	3	
	0.17 - 1.2	2599	41100	3	3	**K107RF77 VU11 DT90S6**
	0.14 - 1.0	2977	47100	3	3	
	0.13 - 0.9	3358	53100	3	3	

Please consult your SEW-Eurodrive Assembly Center for additional speed (RPM) selections and dimension pages not listed.

7:1

Input/Output P_n / P_{a2} HP	Speed Range n_{a1} - n_{a2} rpm	Gear Ratio *i*	Output Torque T_{a2} lb-in	Gear Stages Pri	Gear Stages Sec	Model
1.00/0.78	0.11 - 0.79	3810	60300	3	3	**K107RF77 VU11 DT90S6**
	0.10 - 0.69	4359	68900	3	3	
	0.09 - 0.60	5027	79500	3	3	**K127RF77 VU11 DT90S6**
	0.07 - 0.52	5804	91800	3	3	
	0.07 - 0.46	6565	103800	3	3	
1.50/1.20	81 - 579	5.36	131	3	-	**K37 VU11 DT90L6**
	68 - 488	6.37	156	3	-	
	64 - 457	6.80	166	3	-	
	54 - 390	7.96	195	3	-	
	48 - 349	8.91	220	3	-	
	41 - 296	10.49	255	3	-	
	36 - 256	12.14	295	3	-	
	33 - 238	13.08	320	3	-	
	28 - 203	15.31	375	3	-	
	25 - 181	17.15	420	3	-	
	21 - 154	20.19	495	3	-	
	19 - 133	23.36	570	3	-	
	17 - 124	24.99	610	3	-	
	15 - 108	28.83	705	3	-	
	14 - 104	29.96	735	3	-	
	12 - 87	35.57	870	3	-	
	11 - 82	37.97	930	3	-	
	9.7 - 70	44.46	1090	3	-	
	8.7 - 62	49.79	1220	3	-	
	7.4 - 53	58.60	1430	3	-	
	6.4 - 46	67.80	1660	3	-	
	6.2 - 44	69.84	1710	3	-	**K47 VU11 DT90L6**
	5.7 - 41	75.20	1840	3	-	
	5.1 - 37	85.12	2080	3	-	
	4.8 - 34	90.86	2220	3	-	
	4.1 - 30	104.37	2550	3	-	
	4.0 - 29	108.29	2650	3	-	**K57 VU11 DT90L6**
	3.5 - 25	123.85	3030	3	-	
	3.4 - 24	128.52	3150	3	-	**K77 VU11 DT90L6**
	3.2 - 23	135.28	3310	3	-	
	2.8 - 20	154.02	3770	3	-	
1.50/1.10	2.6 - 19	166	3770	3	2	**K57RF37 VU11 DT90L6**
	2.3 - 16	192	4360	3	2	
	2.0 - 14	215	4880	3	2	
	1.8 - 13	246	5580	3	2	**K67RF37 VU11 DT90L6**
	1.5 - 11	279	6330	3	2	
	1.3 - 9.5	328	7440	3	2	**K77RF37 VU11 DT90L6**
	1.2 - 8.5	367	8330	3	2	**K77RF37 VU11 DT90L6**
	1.0 - 7.3	428	9710	3	2	
	0.89 - 6.4	485	11000	3	2	
	0.78 - 5.6	552	12500	3	2	
	0.77 - 5.5	562	12800	3	2	**K87RF57 VU11 DT90L6**
	0.68 - 4.9	638	14500	3	2	
	0.60 - 4.3	726	16500	3	2	
	0.52 - 3.7	837	19000	3	2	
	0.45 - 3.3	951	21600	3	2	
	0.39 - 2.8	1102	25000	3	2	**K97RF57 VU11 DT90L6**
	0.34 - 2.5	1261	28600	3	2	
	0.30 - 2.2	1430	32400	3	2	
	0.27 - 1.9	1625	36900	3	2	

Please consult your SEW-Eurodrive Assembly Center for additional speed (RPM) selections and dimension pages not listed.

آتور صنعت ATOORSANAT SEW EURODRIVE

7:1

Input/Output P_n / P_{a2} HP	Speed Range n_{a1} - n_{a2} rpm	Gear Ratio *i*	Output Torque T_{a2} lb-in	Gear Stages Pri	Gear Stages Sec	Model
1.50/1.10	0.25 - 1.8	1713	38900	3	2	
	0.22 - 1.6	1939	43300	3	3	
	0.19 - 1.4	2286	51100	3	3	**K107RF77 VU11 DT90L6**
	0.17 - 1.2	2599	58100	3	3	
	0.15 - 1.0	2977	66500	3	3	
	0.14 - 1.0	3009	67300	3	3	
	0.13 - 0.94	3311	74000	3	3	
	0.11 - 0.80	3889	86900	3	3	**K127RF77 VU11 DT90L6**
	0.10 - 0.70	4423	98900	3	3	
	0.09 - 0.62	5027	112400	3	3	

8:1

Input/Output P_n / P_{a2} HP	Speed Range n_{a1} - n_{a2} rpm	Gear Ratio *i*	Output Torque T_{a2} lb-in	Gear Stages Pri	Gear Stages Sec	Model
2.00/1.60	70 - 551	5.81	189	3	-	
	62 - 487	6.58	215	3	-	
	56 - 435	7.36	240	3	-	
	48 - 374	8.56	280	3	-	
	45 - 352	9.10	295	3	-	
	39 - 303	10.56	345	3	-	
	35 - 272	11.77	380	3	-	
	34 - 263	12.19	395	3	-	
	30 - 235	13.65	445	3	-	
	26 - 202	15.86	515	3	-	
	24 - 190	16.86	545	3	-	
	21 - 164	19.58	635	3	-	
	19 - 147	21.81	710	3	-	
	17 - 133	24.06	780	3	-	**K47 VU21 DT100L6**
	16 - 124	25.91	840	3	-	
	14 - 109	29.32	950	3	-	
	13 - 102	31.30	1020	3	-	
	12 - 91	35.39	1150	3	-	
	10 - 81	39.61	1290	3	-	
	8.9 - 70	46.03	1490	3	-	
	8.4 - 65	48.95	1590	3	-	
	7.2 - 56	56.83	1840	3	-	
	6.5 - 51	63.30	2050	3	-	
	5.9 - 46	69.84	2270	3	-	
	5.4 - 43	75.20	2440	3	-	
	4.8 - 38	85.12	2760	3	-	
	4.5 - 35	90.86	2950	3	-	
	4.0 - 31	102.88	3340	3	-	**K57 VU21 DT100L6**
	3.8 - 30	108.29	3510	3	-	
	3.6 - 28	113.56	3680	3	-	
	3.2 - 25	128.52	4170	3	-	**K77 VU21 DT100L6**
	3.0 - 24	135.28	4390	3	-	
	2.8 - 22	147.32	4780	3	-	
	2.5 - 19	164.34	5330	3	-	**K87 VU21 DT100L6**
	2.3 - 18	174.19	5650	3	-	
	2.2 - 18	183	5510	3	2	
	2.0 - 16	201	6050	3	2	
	1.7 - 14	236	7100	3	2	**K87RF57 VU21 DT100L6**
	1.6 - 13	250	7520	3	2	
	1.4 - 11	294	8850	3	2	

Please consult your SEW-Eurodrive Assembly Center for additional speed (RPM) selections and dimension pages not listed.

آتور صنعت
ATOORSANAT

8:1

Input/Output P_n / P_{a2} HP	Speed Range n_{a1} - n_{a2} rpm	Gear Ratio *i*	Output Torque T_{a2} lb-in	Gear Stages Pri	Gear Stages Sec	Model
2.00/1.60	1.2 - 9.7	330	9930	3	2	**K87RF57 VU21 DT100L6**
	1.1 - 8.6	373	11200	3	2	
	0.94 - 7.3	437	13100	3	2	**K97RF57 VU21 DT100L6**
	0.81 - 6.4	504	15200	3	2	
	0.71 - 5.6	573	17200	3	2	
	0.63 - 4.9	652	19600	3	2	
	0.55 - 4.3	743	22400	3	2	
	0.48 - 3.7	855	25700	3	2	
	0.43 - 3.3	957	28800	3	2	
	0.37 - 2.9	1102	33200	3	2	
	0.32 - 2.5	1261	37900	3	2	
	0.31 - 2.4	1336	40200	3	2	**K107RF77 VU21 DT100L6**
	0.26 - 2.1	1554	46800	3	2	
	0.24 - 1.9	1713	51500	3	2	
	0.21 - 1.7	1939	57500	3	3	
	0.18 - 1.4	2286	67700	3	3	
	0.18 - 1.4	2268	67200	3	3	**K127RF77 VU21 DT100L6**
	0.16 - 1.2	2607	77300	3	3	
	0.14 - 1.1	3009	89200	3	3	
	0.12 - 0.97	3311	98100	3	3	
3.00/2.50	56 - 448	7.28	340	3	-	**K67 VU31 DV112M6**
	49 - 390	8.37	390	3	-	
	42 - 337	9.66	450	3	-	
	39 - 307	10.63	495	3	-	
	33 - 261	12.48	580	3	-	
	31 - 247	13.22	615	3	-	
	27 - 215	15.19	710	3	-	
	23 - 186	17.54	820	3	-	
	21 - 169	19.30	900	3	-	
	18 - 144	22.66	1060	3	-	
	17 - 136	24.00	1120	3	-	
	15 - 120	27.28	1270	3	-	
	14 - 108	30.22	1410	3	-	
	11 - 85	38.39	1790	3	-	
	9.3 - 74	44.32	2070	3	-	
	8.4 - 67	48.77	2280	3	-	
	7.2 - 57	57.28	2670	3	-	
	6.8 - 54	60.66	2830	3	-	
	6.0 - 47	68.95	3220	3	-	
	5.4 - 43	76.37	3560	3	-	
	5.3 - 42	78.07	3640	3	-	**K77 VU31 DV112M6**
	4.6 - 37	88.97	4150	3	-	
	4.2 - 34	97.05	4530	3	-	
	4.0 - 32	102.71	4790	3	-	**K87 VU31 DV112M6**
	3.5 - 28	115.82	5400	3	-	
	3.2 - 26	126.91	5920	3	-	
	2.9 - 23	140.28	6540	3	-	**K97 VU31 DV112M6**
	2.7 - 21	153.21	7150	3	-	
3.00/2.30	2.9 - 23	141	6100	3	2	**K87RF57 VU31 DV112M6**
	2.6 - 21	159	6880	3	2	
	2.2 - 18	183	7920	3	2	
	2.0 - 16	201	8690	3	2	
	1.7 - 14	236	10200	3	2	
	1.6 - 13	250	10800	3	2	
	1.4 - 11	294	12700	3	2	

Please consult your SEW-Eurodrive Assembly Center for additional speed (RPM) selections and dimension pages not listed.

آتور صنعت ATOORSANAT

آتور صنعت ATOORSANAT SEW EURODRIVE

8:1						
Input/Output P_n / P_{a2} HP	Speed Range n_{a1} - n_{a2} rpm	Gear Ratio *i*	Output Torque T_{a2} lb-in	Gear Stages Pri	Gear Stages Sec	Model
3.00/2.30	1.2 - 9.9	330	14300	3	2	**K87RF57 VU31 DV112M6**
	1.1 - 8.7	373	16100	3	2	
	0.96 - 7.7	426	18400	3	2	
	0.87 - 6.9	474	20500	3	2	
	0.81 - 6.5	504	21800	3	2	**K97RF57 VU31 DV112M6**
	0.72 - 5.7	573	24800	3	2	
	0.63 - 5.0	652	28200	3	2	
	0.55 - 4.4	743	32100	3	2	
	0.52 - 4.1	793	34300	3	2	**K107RF77 VU31 DV112M6**
	0.45 - 3.6	904	39100	3	2	**K107R77 VU31 DV112M6**
	0.40 - 3.2	1030	44600	3	2	
	0.35 - 2.8	1166	50400	3	2	
	0.31 - 2.4	1336	57800	3	2	
	0.26 - 2.1	1554	67200	3	2	
	0.23 - 1.9	1757	76000	3	2	**K127R77 VU31 DV112M6**
	0.21 - 1.7	1926	83300	3	2	
	0.18 - 1.4	2268	96600	3	3	
	0.16 - 1.3	2607	111100	3	3	
	0.13 - 1.1	3051	130000	3	3	**K157R97 VU31 DV112M6**
	0.12 - 0.93	3516	149800	3	3	
	0.08 - 0.62	5355	225675	3	3	**K167R97 VU31 DV112M6**
	0.06 - 0.50	6562	276120	3	3	
	0.05 - 0.41	8126	341610	3	3	**K187R97 VU31 DV112M6**
	0.04 - 0.35	9363	393825	3	3	

آتور صنعت
ATOORSANAT

Please consult your SEW-Eurodrive Assembly Center for additional speed (RPM) selections and dimension pages not listed.

Notes

آتور صنعت
ATOORSANAT

آتور صنعت
ATOORSANAT
SEW EURODRIVE

1.VARIGEAR® with Helical-Worm Gear Units

5:1 Ratio

Input P_n Hp	Speed Range n_{a1} - n_{a2} rpm	Gear Ratio *i*	Output Torque T_{a2} lb-in	Gear Stages Pri.	Gear Stages Sec.	Model
0.50	109 - 568	6.80	41	2	-	
	92 - 482	8.00	48	2	-	
	82 - 428	9.02	54	2	-	
	72 - 377	10.23	61	2	-	
	68 - 354	10.91	65	2	-	
	59 - 309	12.48	74	2	-	
	55 - 288	13.39	80	2	-	
	48 - 248	15.53	92	2	-	
	41 - 212	18.24	108	2	-	
	37 - 194	19.89	117	2	-	
	33 - 172	22.50	125	2	-	
	29 - 152	25.38	140	2	-	
	26 - 134	28.76	158	2	-	
	24 - 126	30.68	168	2	-	
	21 - 110	35.10	191	2	-	**S37 VU01 DT71D4**
	20 - 102	37.66	205	2	-	
	17 - 88	43.68	235	2	-	
	14.0 - 75	51.30	275	2	-	
	13.0 - 69	55.93	300	2	-	
	12.0 - 61	63.33	285	2	-	
	10.0 - 54	71.44	320	2	-	
	9.1 - 48	80.96	360	2	-	
	8.6 - 45	86.36	380	2	-	
	7.5 - 39	98.80	430	2	-	
	7.0 - 36	106.00	460	2	-	
	6.0 - 31	122.94	525	2	-	
	5.1 - 27	144.40	605	2	-	
	4.7 - 25	157.43	655	2	-	
	4.0 - 21	184.80	785	2	-	**S47 VU01 DT71D4**
	3.7 - 19	201.00	840	2	-	
	3.4 - 18	217.41	980	2	-	**S67 VU01 DT71D4**
	3.1 - 16	158.12	1000	2	-	
	2.7 - 14.0	184.80	1150	2	-	**S47 VU01 DT80K6**
	2.5 - 12.0	201.00	1240	2	-	
	2.3 - 11.0	217.41	1450	2	-	**S67 VU01 DT80K6**
	2.0 - 11.0	365	2260	4	2	
	1.7 - 9.1	424	2620	4	2	
	1.6 - 8.2	469	2900	4	2	
	1.4 - 7.1	543	3360	4	2	**S67R37 VU01 DT71D4**
	1.2 - 6.3	615	3800	4	2	
	1.0 - 5.4	712	4400	4	2	
	0.91 - 4.8	809	5000	4	2	
	0.88 - 4.6	837	5180	4	2	
	0.78 - 4.0	954	5900	4	2	
	0.67 - 3.5	1100	6800	4	2	
	0.59 - 3.1	1245	7580	5	3	
	0.53 - 2.7	1404	8550	5	3	**S77R37 VU01 DT71D4**
	0.46 - 2.4	1600	9750	5	3	
	0.42 - 2.2	1745	10600	5	3	
	0.41 - 2.1	1813	11000	5	3	
	0.36 - 1.9	2054	12700	4	2	**S87R57 VU01 DT71D4**

Please consult your SEW-Eurodrive Assembly Center for additional speed (RPM) selections and dimension pages not listed.

آتور صنعت ATOORSANAT

5:1 Ratio

Input P_n Hp	Speed Range n_{a1} - n_{a2} rpm	Gear Ratio *i*	Output Torque T_{a2} lb-in	Gear Stages Pri.	Gear Stages Sec.	Model
0.50	0.32 - 1.7	2335	14400	4	2	**S87R57 VU01 DT71D4**
	0.29 - 1.5	2586	16000	4	2	
	0.25 - 1.3	2905	18000	4	2	
	0.21 - 1.1	3475	21500	4	2	
	0.18 - 0.96	4017	24500	5	3	**S97R57 VU01 DT71D4**
	0.17 - 0.87	4444	27100	5	3	
	0.15 - 0.78	4937	30100	5	3	
	0.13 - 0.67	5780	35200	5	3	
0.75	109 - 568	6.80	62	2	-	**S37 VU01 DT80K4**
	92 - 482	8.00	72	2	-	
	82 - 428	9.02	81	2	-	
	72 - 377	10.23	92	2	-	
	68 - 354	10.91	98	2	-	
	59 - 309	12.48	112	2	-	
	55 - 288	13.39	120	2	-	
	48 - 248	15.53	138	2	-	
	41 - 212	18.24	162	2	-	
	37 - 194	19.89	176	2	-	
	33 - 172	22.50	187	2	-	
	29 - 152	25.38	210	2	-	
	26 - 134	28.76	235	2	-	
	24 - 126	30.68	250	2	-	
	21 - 110	35.10	285	2	-	
	20 - 102	37.66	305	2	-	
	17 - 88	43.68	355	2	-	
	14.0 - 75	51.30	410	2	-	
	13.0 - 69	55.93	445	2	-	
	10.0 - 54	71.44	480	2	-	
	9.1 - 48	80.96	540	2	-	
	8.6 - 45	86.36	570	2	-	
	7.9 - 41	94.08	640	2	-	**S47 VU01 DT80K4**
	6.7 - 35	110.73	740	2	-	
	5.8 - 30	128.10	840	2	-	
	5.4 - 28	137.05	900	2	-	
	4.7 - 24	158.12	1020	2	-	
	4.0 - 21	184.80	1170	2	-	
	3.7 - 19	201.00	1270	2	-	
	3.4 - 18	217.41	1470	2	-	**S67 VU01 DT80K4**
	3.1 - 16	158.12	1550	2	-	**S57 VU01 DT80N6**
	2.7 - 14.0	184.80	1780	2	-	
	2.5 - 12.0	201.00	1920	2	-	
	2.3 - 11.0	217.41	2180	2	-	**S67 VU01 DT80N6**
	2.0 - 11.0	365	3390	2	2	**S67R37 VU01 DT80K4**
	1.7 - 9.1	424	3930	2	2	
	1.6 - 8.2	469	4350	2	2	
	1.4 - 7.1	543	5040	2	2	
	1.3 - 6.7	574	5320	2	2	**S77R37 VU01 DT80K4**
	1.2 - 6.1	637	5910	2	2	
	1.0 - 5.4	714	6620	2	2	
	0.88 - 4.6	837	7760	2	2	
	0.78 - 4.0	954	8850	2	2	
	0.67 - 3.5	1100	10200	2	2	
	0.45 - 2.4	1631	15100	2	2	**S87R57 VU01 DT80K4**

Please consult your SEW-Eurodrive Assembly Center for additional speed (RPM) selections and dimension pages not listed.

آتور صنعت ATOORSANAT

آتور صنعت ATOORSANAT SEW EURODRIVE

5:1 Ratio

Input P_n Hp	Speed Range n_{a1} - n_{a2} rpm	Gear Ratio *i*	Output Torque T_{a2} lb-in	Gear Stages Pri.	Gear Stages Sec.	Model
0.75	0.41 - 2.1	1824	16900	2	2	
	0.36 - 1.9	2054	19100	2	2	**S87R57 VU01 DT80K4**
	0.32 - 1.7	2335	21700	2	2	
	0.28 - 1.5	2654	24200	2	3	
	0.24 - 1.2	3108	28400	2	3	**S97R57 VU01 DT80K4**
	0.21 - 1.1	3453	31500	2	3	
	0.18 - 0.96	4017	36700	2	3	

5:1 - 6:1 Ratio

Input P_n Hp	Speed Range n_{a1} - n_{a2} rpm	Gear Ratio *i*	Output Torque T_{a2} lb-in	Gear Stages Pri.	Gear Stages Sec.	Model
1.00	109 - 568	6.80	85	2	-	
	92 - 482	8.00	100	2	-	
	82 - 428	9.02	112	2	-	
	72 - 377	10.23	127	2	-	
	68 - 354	10.91	135	2	-	
	59 - 309	12.48	154	2	-	
	55 - 288	13.39	165	2	-	
	48 - 248	15.53	190	2	-	
	41 - 212	18.24	225	2	-	
	37 - 194	19.89	240	2	-	**S37 VU01 DT80N4**
	33 - 172	22.50	260	2	-	
	29 - 152	25.38	290	2	-	
	26 - 134	28.76	325	2	-	
	24 - 126	30.68	350	2	-	
	21 - 110	35.10	395	2	-	
	20 - 102	37.66	425	2	-	
	17 - 88	43.68	485	2	-	
	14.0 - 75	51.30	565	2	-	
	13.0 - 69	55.93	615	2	-	
	12.0 - 60	63.80	710	2	-	
	11.0 - 56	69.39	770	2	-	
	8.8 - 46	84.00	790	2	-	
	7.9 - 41	94.08	880	2	-	**S47 VU01 DT80N4**
	6.7 - 35	110.73	1020	2	-	
	5.8 - 30	128.10	1160	2	-	
	5.4 - 28	137.05	1240	2	-	
	4.7 - 24	158.12	1440	2	-	
	4.0 - 21	184.80	1660	2	-	**S57 VU01 DT80N4**
	3.7 - 19	201.00	1800	2	-	
	3.4 - 18	217.41	2020	2	-	**S67 VU01 DT80N4**
	3.1 - 18	137.05	1900	2	-	**S57 VU11 DT90S6**
	2.7 - 16	158.12	2160	2	-	
	2.4 - 14.0	180.60	2570	2	-	
	2.3 - 13.0	190.11	2680	2	-	**S67 VU11 DT90S6**
	2.0 - 12.0	217.41	3030	2	-	
	1.9 - 11.0	225.26	3370	2	-	**S77 VU11 DT90S6**
	1.7 - 9.9	256.47	3800	2	-	
	1.5 - 7.7	499	6380	2	2	
	1.3 - 6.7	574	7340	2	2	**S77R37 VU01 DT80N4**
	1.2 - 6.1	637	8140	2	2	
	1.0 - 5.4	714	9120	2	2	

Please consult your SEW-Eurodrive Assembly Center for additional speed (RPM) selections and dimension pages not listed.

آتور صنعت ATOORSANAT

5:1 - 6:1 Ratio

Input P_n Hp	Speed Range n_{a1} - n_{a2} rpm	Gear Ratio *i*	Output Torque T_{a2} lb-in	Gear Stages Pri.	Gear Stages Sec.	Model
1.00	0.88 - 4.6	837	10700	2	2	**S77R37 VU01 DT80N4**
	0.80 - 4.1	930	11900	2	2	**S87R57 VU01 DT80N4**
	0.45 - 2.4	1631	20800	2	2	
	0.40 - 2.1	1860	23400	2	3	**S97R57 VU01 DT80N4**
	0.36 - 1.9	2081	26200	2	3	
	0.32 - 1.7	2329	29300	2	3	
	0.28 - 1.5	2654	33400	2	3	
	0.27 - 1.6	1574	30200	5	3	**S97R57 VU11 DT90S6**
	0.23 - 1.4	1860	35700	5	3	

6:1 Ratio

Input P_n Hp	Speed Range n_{a1} - n_{a2} rpm	Gear Ratio *i*	Output Torque T_{a2} lb-in	Gear Stages Pri.	Gear Stages Sec.	Model
1.50	89 - 543	7.28	129	2	-	**S47 VU11 DT90S4**
	75 - 458	8.64	153	2	-	
	70 - 429	9.23	163	2	-	
	60 - 366	10.80	191	2	-	
	53 - 327	12.10	215	2	-	
	45 - 278	14.24	250	2	-	
	39 - 240	16.47	290	2	-	
	37 - 225	17.62	310	2	-	
	32 - 195	20.33	355	2	-	
	26 - 160	24.77	405	2	-	
	22 - 136	29.00	475	2	-	
	20 - 122	32.48	525	2	-	
	17 - 103	38.23	615	2	-	
	15 - 89	44.22	710	2	-	
	14.0 - 84	47.32	755	2	-	
	12.0 - 72	54.59	870	2	-	
	9.6 - 59	67.20	930	2	-	**S57 VU11 DT90S4**
	9.0 - 55	71.75	990	2	-	
	7.7 - 47	84.00	1140	2	-	
	6.9 - 42	94.08	1270	2	-	
	5.8 - 36	110.73	1480	2	-	
	5.1 - 31	128.10	1690	2	-	
	4.7 - 29	137.05	1800	2	-	
	4.1 - 25	158.12	2050	2	-	
	3.6 - 22	180.60	2420	2	-	**S67 VU11 DT90S4**
	3.4 - 21	190.11	2540	2	-	
	3.0 - 18	217.41	2870	2	-	
	2.9 - 18	225.26	3180	2	-	**S77 VU11 DT90S4**
	2.5 - 15	256.47	3580	2	-	
	2.4 - 14.0	180.60	3630	2	-	**S67 VU11 DT90L6**
	2.3 - 14.0	190.11	3790	2	-	
	2.0 - 12.0	214.00	4550	2	-	**S77 VU11 DT90L6**
	1.9 - 12.0	225.26	4770	2	-	
	1.7 - 10.0	256.47	5370	2	-	
	1.5 - 9.0	438	7930	2	2	**S77R37 VU11 DT90S4**
	1.3 - 7.9	499	9030	2	2	
	1.1 - 6.9	574	10400	2	2	
	1.0 - 6.3	624	11300	2	2	**S87R57 VU11 DT90S4**
	0.90 - 5.5	719	13000	2	2	

Please consult your SEW-Eurodrive Assembly Center for additional speed (RPM) selections and dimension pages not listed.

آتور صنعت ATOORSANAT

آتور صنعت ATOORSANAT SEW EURODRIVE

6:1 Ratio

Input P_n Hp	Speed Range n_{a1} - n_{a2} rpm	Gear Ratio *i*	Output Torque T_{a2} lb-in	Gear Stages Pri.	Gear Stages Sec.	Model
1.50	0.78 - 4.8	831	15000	2	2	**S87R57 VU11 DT90S4**
	0.70 - 4.3	930	16800	2	2	
	0.63 - 3.8	1032	18700	2	2	
	0.54 - 3.3	1191	21600	2	2	
	0.53 - 3.2	1223	22100	2	2	**S97R57 VU11 DT90S4**
	0.46 - 2.8	1394	25200	2	2	
	0.41 - 2.5	1574	28100	2	3	
	0.35 - 2.1	1860	33200	2	3	
	0.31 - 1.9	2081	37100	2	3	
2.00	89 - 543	7.28	177	2	-	**S47 VU11 DT90L4**
	75 - 458	8.64	210	2	-	
	70 - 429	9.23	225	2	-	
	60 - 366	10.80	260	2	-	
	53 - 327	12.10	290	2	-	
	45 - 278	14.24	340	2	-	
	39 - 240	16.47	395	2	-	
	37 - 225	17.62	420	2	-	
	32 - 195	20.33	485	2	-	
	22 - 136	29.00	645	2	-	
	20 - 122	32.48	720	2	-	
	17 - 103	38.23	840	2	-	
	15 - 89	44.22	970	2	-	
	14.0 - 84	47.32	1030	2	-	
	12.0 - 72	54.59	1180	2	-	
	10.0 - 63	62.35	1390	2	-	**S67 VU11 DT90L4**
	9.9 - 60	65.63	1460	2	-	
	8.6 - 53	75.06	1660	2	-	
	7.5 - 46	85.83	1660	2	-	
	6.4 - 39	100.80	1930	2	-	
	6.1 - 37	106.75	2030	2	-	
	5.3 - 33	121.33	2290	2	-	
	4.8 - 29	134.40	2520	2	-	
	4.1 - 25	158.45	2930	2	-	
	3.9 - 24	168	4150	2	2	**S67R37 VU11 DT90L4**
	3.6 - 22	180.60	3310	2	-	**S67 VU11 DT90L4**
	3.4 - 21	190.11	3470	2	-	
	3.3 - 20	198	4900	2	2	**S67R37 VU11 DT90L4**
	3.0 - 18	217.41	3920	2	-	**S67 VU11 DT90L4**
	2.9 - 18	225.26	4340	2	-	**S77 VU11 DT90L4**
	2.6 - 16	250	6180	2	2	**S77R37 VU11 DT90L4**
	2.2 - 14.0	289	7150	2	2	
	2.0 - 12.0	327	8090	2	2	
	1.7 - 10.0	389	9620	2	2	
	1.5 - 9.0	438	10800	2	2	
	1.2 - 7.1	558	13800	2	2	**S87R57 VU11 DT90L4**
	1.0 - 6.3	624	15400	2	2	
	0.90 - 5.5	719	17800	2	2	
	0.78 - 4.8	831	20600	2	2	
	0.70 - 4.3	928	23000	2	2	**S97R57 VU11 DT90L4**
	0.60 - 3.7	1070	26500	2	2	
	0.53 - 3.2	1223	30200	2	2	
	0.46 - 2.8	1394	34500	2	2	
	0.44 - 2.7	928	36700	2	2	**S97R57 VU21 DT100L6**

Please consult your SEW-Eurodrive Assembly Center for additional speed (RPM) selections and dimension pages not listed.

آتور صنعت
ATOORSANAT

6:1 Ratio

Input P_n Hp	Speed Range n_{a1} - n_{a2} rpm	Gear Ratio *i*	Output Torque T_{a2} lb-in	Gear Stages Pri.	Gear Stages Sec.	Model
3.00	81 - 503	7.56	280	2	-	
	71 - 437	8.69	325	2	-	
	61 - 379	10.03	375	2	-	
	56 - 345	11.03	410	2	-	
	47 - 293	12.96	480	2	-	
	45 - 277	13.73	510	2	-	
	39 - 244	15.60	575	2	-	
	36 - 220	17.28	640	2	-	
	30 - 187	20.37	750	2	-	
	26 - 164	23.22	850	2	-	
	25 - 156	24.44	900	2	-	
	23 - 141	26.93	940	2	-	
	21 - 128	29.63	1030	2	-	**S67 VU21 DT100LS4**
	18 - 109	34.80	1200	2	-	
	17 - 103	36.85	1270	2	-	
	15 - 91	41.89	1440	2	-	
	13.0 - 82	46.40	1590	2	-	
	11.0 - 69	54.70	1860	2	-	
	9.8 - 61	62.35	2110	2	-	
	9.4 - 58	65.63	2220	2	-	
	7.9 - 49	78.00	2310	2	-	
	7.2 - 44	85.83	2520	2	-	
	6.1 - 38	100.80	2940	2	-	
	5.7 - 36	106.75	3100	2	-	
	5.1 - 31	121.33	3490	2	-	
	4.6 - 28	134.40	3840	2	-	
	4.1 - 26	148.15	4480	2	-	
	3.8 - 24	161.60	4860	2	-	
	3.2 - 20	189.09	5630	2	-	**S77 VU21 DT100LS4**
	2.9 - 18	214.00	6310	2	-	
	2.7 - 17	225.26	6620	2	-	
	2.4 - 15	258.18	7870	2	-	**S87 VU21 DT100LS4**
	2.1 - 13.0	288.00	8710	2	-	
	2.0 - 12.0	202.96	9410	2	-	**S87 VU31 DV112M6**
	1.8 - 11.0	222.40	10200	2	-	
	1.6 - 9.4	262.22	12400	2	-	**S97 VU31 DV112M6**
	1.4 - 8.6	286.40	13400	2	-	
	1.3 - 7.8	485	18300	2	2	**S87R57 VU21 DT100LS4**
	1.1 - 6.8	558	21000	2	2	
	0.98 - 6.1	626	23600	2	2	
	0.86 - 5.3	714	26900	2	2	**S97R57 VU21 DT100LS4**
	0.74 - 4.6	824	31000	2	2	
	0.66 - 4.1	928	35000	2	2	
5.00	81 - 480	7.56	495	2	-	
	70 - 418	8.69	565	2	-	
	61 - 362	10.03	650	2	-	
	55 - 329	11.03	715	2	-	
	47 - 280	12.96	840	2	-	**S67 VU31 DT100L4**
	44 - 264	13.73	890	2	-	
	39 - 233	15.60	1010	2	-	
	35 - 210	17.28	1110	2	-	
	30 - 179	20.30	1240	2	-	
	26 - 156	23.33	1420	2	-	**S67 VU31 DT100L4**

Please consult your SEW-Eurodrive Assembly Center for additional speed (RPM) selections and dimension pages not listed.

آتور صنعت ATOORSANAT SEW EURODRIVE

6:1 Ratio

Input P_n Hp	Speed Range n_{a1} - n_{a2} rpm	Gear Ratio *i*	Output Torque T_{a2} lb-in	Gear Stages Pri.	Gear Stages Sec.	Model
5.00	23 - 135	26.93	1640	2	-	
	21 - 122	29.63	1800	2	-	
	18 - 104	34.80	2100	2	-	
	17 - 98	36.85	2220	2	-	**S67 VU31 DT100L4**
	15 - 87	41.89	2510	2	-	
	13.0 - 78	46.40	2770	2	-	
	12.0 - 73	49.38	3080	2	-	
	11.0 - 67	53.87	3350	2	-	
	9.2 - 54	66.67	3660	2	-	
	8.1 - 48	75.20	4100	2	-	
	7.2 - 43	85.22	4630	2	-	
	6.3 - 37	97.14	5240	2	-	**S77 VU31 DT100L4**
	5.7 - 34	107.83	5790	2	-	
	5.0 - 29	123.20	6570	2	-	
	4.7 - 28	130.00	6910	2	-	
	4.1 - 24	148.15	7810	2	-	
	3.8 - 22	161.60	8480	2	-	
	3.4 - 20	180.00	9780	2	-	
	3.0 - 18	202.96	11000	2	-	**S87 VU31 DT100L4**
	2.7 - 16	222.40	11900	2	-	
	2.4 - 14.0	255	16800	2	2	
	2.2 - 13.0	281	18500	2	2	**S87R57 VU31 DT100L4**
	1.9 - 11.0	323	21200	2	2	
	1.6 - 9.7	376	24700	2	2	
	1.5 - 8.6	420	27600	2	2	
	1.3 - 7.5	484	31800	2	2	**S97R57 VU31 DT100L4**
	1.1 - 6.7	538	35400	2	2	
7.50	81 - 494	7.56	720	2	-	
	71 - 430	8.69	820	2	-	
	61 - 373	10.03	950	2	-	
	56 - 339	11.03	1040	2	-	
	47 - 288	12.96	1220	2	-	**S67 VU31 DV132S4**
	45 - 272	13.73	1300	2	-	
	39 - 240	15.60	1470	2	-	
	36 - 216	17.28	1620	2	-	
	35 - 214	17.45	1660	2	-	
	33 - 203	18.42	1750	2	-	
	29 - 178	20.99	1990	2	-	
	27 - 163	22.89	2170	2	-	
	25 - 149	25.07	2310	2	-	
	22 - 132	28.41	2610	2	-	
	19 - 115	32.38	2970	2	-	**S77 VU31 DV132S4**
	17 - 104	35.94	3290	2	-	
	15 - 91	41.07	3750	2	-	
	14.0 - 86	43.33	3950	2	-	
	12.0 - 76	49.38	4480	2	-	
	11.0 - 69	53.87	4880	2	-	
	7.2 - 44	85.22	6740	2	-	
	7.1 - 43	86.15	7050	2	-	
	6.2 - 38	99.26	8080	2	-	
	5.6 - 34	110.40	8940	2	-	**S87 VU31 DV132S4**
	5.0 - 30	123.48	9960	2	-	
	4.4 - 27	139.05	11100	2	-	

Please consult your SEW-Eurodrive Assembly Center for additional speed (RPM) selections and dimension pages not listed.

آتور صنعت ATOORSANAT

6:1 Ratio

Input P_n Hp	Speed Range n_{a1} - n_{a2} rpm	Gear Ratio *i*	Output Torque T_{a2} lb-in	Gear Stages Pri.	Gear Stages Sec.	Model
7.50	4.1 - 25	151.30	12100	2	-	
	3.4 - 21	180.00	14200	2	-	**S87 VU31 DV132S4**
	3.0 - 18	202.96	16000	2	-	
	2.7 - 16	231.67	18600	2	-	
	2.3 - 14.0	262.22	20900	2	-	**S97 VU31 DV132S4**
	2.1 - 13.0	286.40	22700	2	-	
10.00	75 - 458	8.06	1080	2	-	
	64 - 391	9.44	1260	2	-	
	57 - 346	10.65	1420	2	-	
	50 - 306	12.07	1610	2	-	
	44 - 268	13.76	1840	2	-	
	40 - 241	15.28	2040	2	-	
	35 - 211	17.45	2320	2	-	
	33 - 200	18.42	2450	2	-	
	32 - 194	18.97	2450	2	-	**S77 VU41 DV132M4**
	27 - 166	22.22	2860	2	-	
	24 - 147	25.07	3220	2	-	
	21 - 130	28.41	3640	2	-	
	19 - 114	32.38	4140	2	-	
	17 - 103	35.94	4590	2	-	
	15 - 90	41.07	5230	2	-	
	14.0 - 85	43.33	5510	2	-	
	13.0 - 77	47.91	6190	2	-	
	11.0 - 65	57.00	7330	2	-	**S87 VU41 DV132M4**
	5.5 - 33	110.40	12500	2	-	
	4.9 - 30	123.48	13900	2	-	
	4.6 - 28	131.85	15100	2	-	
	4.2 - 25	145.60	16700	2	-	
	3.7 - 23	161.74	18400	2	-	
	3.3 - 20	180.95	20500	2	-	**S97 VU41 DV132M4**
	3.1 - 19	196.52	22200	2	-	
	2.6 - 16	231.67	26000	2	-	
15.00	75 - 458	8.06	1570	2	-	
	64 - 391	9.44	1830	2	-	
	57 - 346	10.65	2070	2	-	
	50 - 306	12.07	2340	2	-	
	44 - 268	13.76	2660	2	-	**S77 VU41 DV160M4**
	40 - 241	15.28	2950	2	-	
	35 - 211	17.45	3370	2	-	
	33 - 200	18.42	3550	2	-	
	27 - 166	22.22	4150	2	-	
	24 - 147	25.07	4680	2	-	
	21 - 130	28.41	5290	2	-	
	19 - 114	32.38	6010	2	-	**S77 VU41 DV160M4**
	17 - 103	35.94	6660	2	-	
	15 - 90	41.07	7590	2	-	
	14.0 - 85	43.33	7990	2	-	
	13.0 - 77	47.91	8980	2	-	**S87 VU41 DV160M4**
	11.0 - 65	57.00	10600	2	-	
	8.5 - 52	71.43	13500	2	-	
	5.2 - 32	116.92	19600	2	-	**S97 VU41 DV160M4**
	4.6 - 28	131.85	22000	2	-	
	4.2 - 25	145.60	24200	2	-	

Please consult your SEW-Eurodrive Assembly Center for additional speed (RPM) selections and dimension pages not listed.

آتور صنعت ATOORSANAT

آتور صنعت ATOORSANAT SEW EURODRIVE

6:1 Ratio

Input P_n Hp	Speed Range n_{a1} - n_{a2} rpm	Gear Ratio *i*	Output Torque T_{a2} lb-in	Gear Stages Pri.	Gear Stages Sec.	Model
20.00	56 - 341	10.93	2890	2	-	
	51 - 306	12.21	3220	2	-	
	44 - 265	14.06	3700	2	-	
	39 - 239	15.64	4120	2	-	
	35 - 213	17.49	4600	2	-	
	31 - 189	19.70	5170	2	-	**S87 VU51 DV160L4**
	23 - 137	27.28	6980	2	-	
	20 - 119	31.43	8020	2	-	
	18 - 107	34.96	8910	2	-	
	16 - 95	39.10	9940	2	-	
	14.0 - 85	44.03	11200	2	-	
	12.0 - 75	49.87	12800	2	-	**S97 VU51 DV160L4**
	11.0 - 67	55.79	14300	2	-	
	10.0 - 61	40.65	15600	2	-	
	9.2 - 55	44.89	17200	2	-	**S97 VU51 DV180L6**
	8.3 - 50	49.87	19100	2	-	
	7.4 - 44	55.79	21300	2	-	
25.00	56 - 341	10.93	3570	2	-	
	51 - 306	12.21	3980	2	-	
	44 - 265	14.06	4580	2	-	**S87 VU51 DV180M4**
	39 - 239	15.64	5090	2	-	
	35 - 213	17.49	5680	2	-	
	31 - 189	19.70	6390	2	-	
	29 - 176	21.23	6960	2	-	
	26 - 158	23.59	7730	2	-	
	23 - 141	26.39	8640	2	-	
	19 - 114	32.60	10400	2	-	
	17 - 104	36.05	11500	2	-	**S97 VU51 DV180M4**
	15 - 92	40.65	12900	2	-	
	14.0 - 83	44.89	14300	2	-	
	12.0 - 75	49.87	15800	2	-	
	11.0 - 67	55.79	17700	2	-	
30.00	51 - 306	12.21	4720	2	-	
	44 - 265	14.06	5420	2	-	
	39 - 239	15.64	6030	2	-	**S87 VU51 DV180L4**
	35 - 213	17.49	6730	2	-	
	31 - 189	19.70	7570	2	-	
	29 - 176	21.23	8250	2	-	
	26 - 158	23.59	9150	2	-	
	23 - 141	26.39	10200	2	-	
	19 - 114	32.60	12300	2	-	
	17 - 104	36.05	13600	2	-	**S97 VU51 DV180L4**
	15 - 92	40.65	15300	2	-	
	14.0 - 83	44.89	16900	2	-	
	12.0 - 75	49.87	18700	2	-	
	11.0 - 67	55.79	20900	2	-	

Please consult your SEW-Eurodrive Assembly Center for additional speed (RPM) selections and dimension pages not listed.

7:1 Ratio

Input P_n Hp	Speed Range n_{a1} - n_{a2} rpm	Gear Ratio *i*	Output Torque T_{a2} lb-in	Gear Stages Pri.	Gear Stages Sec.	Model
1.00	59 - 416	7.28	116	2	-	
	50 - 350	8.64	138	2	-	
	47 - 328	9.23	147	2	-	
	40 - 280	10.80	172	2	-	
	36 - 250	12.10	192	2	-	
	30 - 212	14.24	225	2	-	
	26 - 184	16.47	260	2	-	
	24 - 172	17.62	275	2	-	
	21 - 149	20.33	320	2	-	**S47 VU11 DT90S6**
	19 - 130	23.20	340	2	-	
	17 - 122	24.77	365	2	-	
	15 - 104	29.00	425	2	-	
	13.0 - 93	32.48	475	2	-	
	11.0 - 79	38.23	555	2	-	
	9.7 - 68	44.22	635	2	-	
	9.1 - 64	47.32	680	2	-	
	7.9 - 55	54.59	780	2	-	
	3.9 - 27	110.73	1290	2	-	
	3.4 - 24	128.10	1520	2	-	
	3.1 - 22	137.05	1610	2	-	**S57 VU11 DT90S6**
	2.7 - 19	158.12	1830	2	-	
	2.4 - 17	180.60	2170	2	-	
	2.3 - 16	190.11	2280	2	-	**S67 VU11 DT90S6**
	2.0 - 14.0	217.41	2570	2	-	
	1.9 - 13.0	225.26	2850	2	-	**S77 VU11 DT90S6**
	1.7 - 12.0	256.47	3220	2	-	
	1.5 - 11.0	281	4580	2	2	**S67R37 VU11 DT90S6**
	1.3 - 9.3	327	5330	2	2	
	1.1 - 7.8	389	6340	2	2	
	0.98 - 6.9	438	7140	2	2	**S77R37 VU11 DT90S6**
	0.86 - 6.1	499	8140	2	2	
	0.75 - 5.3	574	9360	2	2	
	0.68 - 4.7	637	10400	2	2	
	0.60 - 4.2	719	11700	2	2	
	0.52 - 3.6	831	13500	2	2	
	0.46 - 3.3	930	15200	2	2	**S87R57 VU11 DT90S6**
	0.42 - 2.9	1032	16800	2	2	
	0.36 - 2.5	1191	19400	2	2	
	0.32 - 2.3	1332	21700	2	2	
	0.31 - 2.2	1394	22700	2	2	
	0.27 - 1.9	1574	25300	2	3	**S97R57 VU11 DT90S6**
	0.23 - 1.6	1860	29900	2	3	
	0.21 - 1.5	2081	33400	2	3	
1.50	59 - 427	7.28	164	2	-	
	50 - 360	8.64	195	2	-	
	47 - 337	9.23	210	2	-	
	40 - 288	10.80	240	2	-	**S47 VU11 DT90L6**
	36 - 257	12.10	270	2	-	
	30 - 218	14.24	315	2	-	
	26 - 189	16.47	365	2	-	
	25 - 176	17.62	390	2	-	
	21 - 153	20.33	450	2	-	**S47 VU11 DT90L6**
	17 - 125	24.77	515	2	-	

Please consult your SEW-Eurodrive Assembly Center for additional speed (RPM) selections and dimension pages not listed.

آتور صنعت ATOORSANAT

آتور صنعت ATOORSANAT SEW EURODRIVE

7:1 Ratio

Input P_n Hp	Speed Range n_{a1} - n_{a2} rpm	Gear Ratio *i*	Output Torque T_{a2} lb-in	Gear Stages Pri.	Gear Stages Sec.	Model
1.50	15 - 107	29.00	600	2	-	**S47 VU11 DT90L6**
	13.0 - 96	32.48	670	2	-	
	11.0 - 81	38.23	785	2	-	
	9.8 - 70	44.22	900	2	-	
	9.1 - 66	47.32	960	2	-	
	7.9 - 57	54.59	1100	2	-	
	6.4 - 46	67.20	1180	2	-	**S57 VU11 DT90L6**
	6.0 - 43	71.75	1250	2	-	
	5.1 - 37	84.00	1450	2	-	
	4.6 - 33	94.08	1610	2	-	
	3.9 - 28	110.73	1870	2	-	
	3.4 - 24	128.10	2140	2	-	
	3.2 - 23	137.05	2280	2	-	
	2.7 - 20	158.45	2720	2	-	**S67 VU11 DT90L6**
	2.4 - 17	180.60	3070	2	-	
	2.3 - 16	190.11	3210	2	-	
	2.0 - 14.0	217.41	3630	2	-	
	1.9 - 14.0	225.26	4030	2	-	**S77 VU11 DT90L6**
	1.7 - 12.0	256.47	4540	2	-	
	1.5 - 11.0	289	6660	2	2	**S77R37 VU11 DT90L6**
	1.3 - 9.5	327	7530	2	2	
	1.1 - 8.0	389	8960	2	2	
	0.99 - 7.1	438	10100	2	2	
	0.77 - 5.6	558	12900	2	2	**S87R57 VU11 DT90L6**
	0.69 - 5.0	624	14400	2	2	
	0.60 - 4.3	719	16600	2	2	
	0.52 - 3.7	831	19100	2	2	
	0.46 - 3.3	930	21400	2	2	
	0.40 - 2.9	1070	24600	2	2	**S97R57 VU11 DT90L6**
	0.35 - 2.5	1223	28200	2	2	
	0.31 - 2.2	1394	32100	4	-	
	0.27 - 2.0	1574	35700	5	-	

آتور صنعت
ATOORSANAT

Please consult your SEW-Eurodrive Assembly Center for additional speed (RPM) selections and dimension pages not listed.

8:1 Ratio

Input P_n Hp	Speed Range n_{a1} - n_{a2} rpm	Gear Ratio *i*	Output Torque T_{a2} lb-in	Gear Stages Pri.	Gear Stages Sec.	Model
2.00	54 - 424	7.56	230	2	-	
	47 - 369	8.69	265	2	-	
	41 - 319	10.03	305	2	-	
	37 - 290	11.03	330	2	-	
	32 - 247	12.96	390	2	-	
	30 - 233	13.73	415	2	-	
	26 - 205	15.60	470	2	-	
	24 - 185	17.28	515	2	-	
	20 - 157	20.37	605	2	-	
	18 - 138	23.22	690	2	-	
	17 - 131	24.44	725	2	-	
	15 - 119	26.93	760	2	-	
	14.0 - 108	29.63	830	2	-	
	12.0 - 92	34.80	970	2	-	
	11.0 - 87	36.85	1030	2	-	**S67 VU21 DT100L6**
	9.8 - 76	41.89	1170	2	-	
	8.8 - 69	46.40	1290	2	-	
	7.5 - 59	54.70	1510	2	-	
	6.6 - 51	62.35	1710	2	-	
	6.2 - 49	65.63	1800	2	-	
	5.2 - 41	78.00	1870	2	-	
	4.8 - 37	85.83	2040	2	-	
	4.1 - 32	100.80	2370	2	-	
	3.8 - 30	106.75	2500	2	-	
	3.4 - 26	121.33	2820	2	-	
	3.0 - 24	134.40	3100	2	-	
	2.6 - 20	158.45	3610	2	-	
	2.3 - 18	180.60	4070	2	-	
	2.2 - 17	189.09	4540	2	-	
	1.9 - 15	214.00	5100	2	-	**S77 VU21 DT100L6**
	1.8 - 14.0	225.26	5340	2	-	
	1.6 - 12.0	258.18	6350	2	-	**S87 VU21 DT100L6**
	1.5 - 11.0	281	8580	2	2	**S87R57 VU21 DT100L6**
	1.4 - 11.0	288.00	7040	2	-	**S87 VU21 DT100L6**
	1.3 - 9.9	323	9870	2	2	
	1.1 - 8.5	378	11500	2	2	
	0.94 - 7.4	435	13300	2	2	
	0.84 - 6.6	485	14800	2	2	**S87R57 VU21 DT100L6**
	0.73 - 5.7	558	17000	2	2	
	0.66 - 5.1	624	19100	2	2	
	0.57 - 4.5	719	22000	2	2	
	0.50 - 3.9	824	25200	2	2	
	0.44 - 3.5	928	28300	2	2	**S97R57 VU21 DT100L6**
	0.38 - 3.0	1070	32700	2	2	
3.00	54 - 431	7.56	330	2	-	
	47 - 375	8.69	375	2	-	
	41 - 325	10.03	435	2	-	
	37 - 296	11.03	480	2	-	
	32 - 252	12.96	560	2	-	**S67 VU31 DV112M6**
	30 - 237	13.73	595	2	-	
	26 - 209	15.60	670	2	-	
	24 - 189	17.28	745	2	-	
	20 - 161	20.30	830	2	-	**S67 VU31 DV112M6**

Please consult your SEW-Eurodrive Assembly Center for additional speed (RPM) selections and dimension pages not listed.

آتور صنعت ATOORSANAT

آتور صنعت ATOORSANAT SEW EURODRIVE

8:1 Ratio

Input P_n Hp	Speed Range n_{a1} - n_{a2} rpm	Gear Ratio *i*	Output Torque T_{a2} lb-in	Gear Stages Pri.	Gear Stages Sec.	Model
3.00	18 - 140	23.33	950	2	-	**S67 VU31 DV112M6**
	15 - 121	26.93	1090	2	-	
	14.0 - 110	29.63	1200	2	-	
	12.0 - 94	34.80	1400	2	-	
	11.0 - 88	36.85	1480	2	-	
	9.8 - 78	41.89	1680	2	-	
	8.8 - 70	46.40	1850	2	-	
	5.3 - 42	78.00	2680	2	-	
	4.8 - 38	85.83	2930	2	-	
	4.1 - 32	100.80	3410	2	-	
	3.8 - 31	106.75	3600	2	-	
	3.4 - 27	121.33	4050	2	-	
	3.3 - 26	123.20	4370	2	-	**S77 VU31 DV112M6**
	3.2 - 25	130.00	4600	2	-	
	2.8 - 22	148.15	5200	2	-	
	2.5 - 20	161.60	5640	2	-	
	2.3 - 18	180.00	6520	2	-	**S87 VU31 DV112M6**
	2.0 - 16	202.96	7290	2	-	
	1.8 - 15	222.40	7950	2	-	
	1.6 - 12.0	262.22	9550	2	-	**S97 VU31 DV112M6**
	1.4 - 11.0	286.40	10400	2	-	
	1.3 - 10.0	323	14200	2	2	**S87R57 VU31 DV112M6**
	1.1 - 8.6	378	16600	2	2	
	0.94 - 7.5	435	19100	2	2	
	0.85 - 6.7	485	21300	2	2	
	0.76 - 6.1	538	23600	2	2	**S97R57 VU31 DV112M6**
	0.66 - 5.2	626	27500	2	2	
	0.57 - 4.6	714	31400	2	2	
	0.50 - 4.0	824	36200	2	2	

آتور صنعت
ATOORSANAT

Please consult your SEW-Eurodrive Assembly Center for additional speed (RPM) selections and dimension pages not listed.

1. R-Series Dimensions

VU

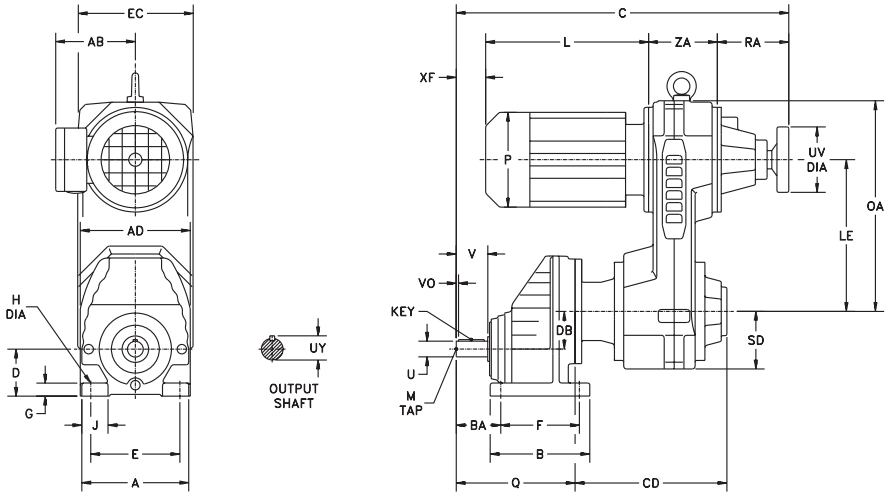

VZ

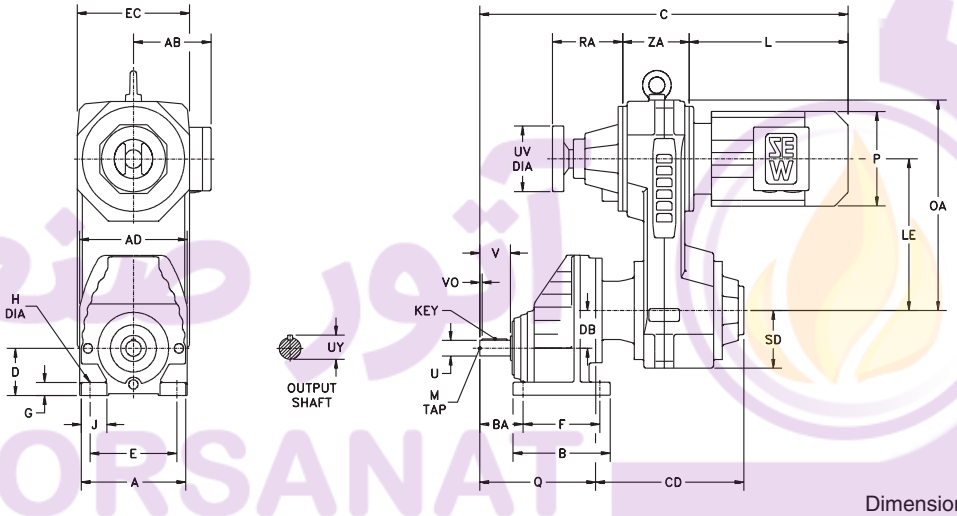

Dimensions are inch / mm

Gearcase												
Model	**A**	**AD**	**B**	**BA**	**D***	**DB**	**E**	**F**	**G**	**H**	**J**	**Q**
RX57	6.14 156	6.38 162	5.39 137	2.20 56	2.48 63	2.05 52	4.92 125	4.33 110	0.71 18	0.43 11	1.22 31	6.85 174
RX67	6.69 170	6.93 176	5.91 150	2.95 75	3.15 80	2.36 60	5.31 135	4.72 120	0.79 20	0.53 13.5	1.38 35	7.91 201
RX77	8.03 204	8.27 210	7.48 190	3.35 85	3.54 90	2.83 72	6.69 170	5.91 150	0.98 25	0.69 17.5	1.97 50	8.94 227

Output Shaft						
Model	**U***	**UY**	**V**	**VO**	**Key**	**M**
RX57	0.750 20	0.83 22.5	1.57 40	0.23 3.5	$\frac{3}{16} \times \frac{3}{16} \times 1\frac{1}{16}$ 6 x 6 x 32	$\frac{1}{4} - 20 \times 0.63$ M6 x 16
RX67	1.000 25	1.11 28	1.97 50	0.26 3.5	$\frac{1}{4} \times \frac{1}{4} \times 1\frac{5}{16}$ 8 x 7 x 40	$\frac{3}{8} - 16 \times 0.87$ M10 x 22
RX77	1.250 30	1.36 33	2.36 60	0.26 3.5	$\frac{1}{4} \times \frac{1}{4} \times 1\frac{11}{16}$ 8 x 7 x 50	$\frac{1}{2} - 13 \times 1.12$ M10 x 22

*** Note: See page 18 for tolerances.**

Dimensions subject to change without notice.

آتور صنعت ATOORSANAT
SEW EURODRIVE

VARIGEAR®							
Model	**EC**	**LE**	**OA**	**RA**	**SD**	**UV**	**ZA**
VU/VZ01	6.93 176	7.17 182	10.59 269	3.86 98	2.83 72	3.15 80	3.15 80
VU/VZ11	7.20 183	9.13 232	12.68 322	4.61 117	3.46 88	3.94 100	3.86 98
VU/VZ21	8.94 227	9.65 245	13.98 355	5.12 130	4.33 110	3.94 100	4.72 120
VU/VZ31	11.14 283	12.01 305	17.52 445	5.91 150	5.43 138	4.92 125	5.98 152

VARIGEAR® VU								
Model		**VU01**		**VU11**	**VU21**	**VU31**		
		DT71	**DT80**	**DT90**	**DT100**	**DT100**	**DV112M**	**DV132S**
RX57	**C**	18.07 459	18.07 459	19.84 504	22.48 571	— —	— —	— —
	CD	8.11 206	8.11 206	9.13 232	10.98 279	— —	— —	— —
	XF	3.11 79	1.14 29	0.63 16	0.39 10	— —	— —	— —
RX67	**C**	19.13 486	19.13 486	20.91 531	23.54 598	— —	— —	— —
	CD	8.11 206	8.11 206	9.13 232	10.98 279	— —	— —	— —
	XF	4.17 106	2.20 56	1.69 43	1.46 37	— —	— —	— —
RX77	**C**	— —	— —	21.69 551	24.25 616	27.24 692	27.24 692	27.24 692
	CD	— —	— —	8.90 226	10.67 271	12.68 322	12.68 322	12.68 322
	XF	— —	— —	2.48 63	2.17 55	***.** ****	1.61 41	-0.16 -4

VARIGEAR® VZ								
Model		**VZ01**		**VZ11**	**VZ21**	**VZ31**		
		DT71	**DT80**	**DT90**	**DT100**	**DT100**	**DV112M**	**DV132S**
RX57	**C**	19.29 490	21.26 540	23.23 590	26.06 662	— —	— —	— —
	CD	8.11 206	8.11 206	9.13 232	10.98 279	— —	— —	— —
RX67	**C**	20.35 517	22.32 567	24.29 617	27.13 689	— —	— —	— —
	CD	8.11 206	8.11 206	9.13 232	10.98 279	— —	— —	— —
RX77	**C**	— —	— —	25.08 637	27.83 707	29.13 740	30.63 778	32.40 823
	CD	— —	— —	8.90 226	10.67 271	12.68 322	12.68 322	12.68 322

Motor							
	VU/VZ01		**VU/VZ11**	**VU/VZ21**	**VU/VZ31**		
	DT71	**DT80**	**DT90**	**DT100**	**DT100**	**DV112M**	**DV132S**
AB	5.43 138	5.43 138	6.73 171	6.89 175	6.89 175	7.40 188	7.40 188
L	7.95 202	9.92 252	10.75 273	12.24 311	12.24 311	13.74 349	15.51 394
P	5.71 145	5.71 145	7.76 197	7.76 197	7.76 197	8.70 221	8.70 221

Dimension AB is to motor conduit box
Eye bolts are removable
Size VU6 is supplied with windless-type control
See page 56 for VARIGEAR® configuration options.

VU

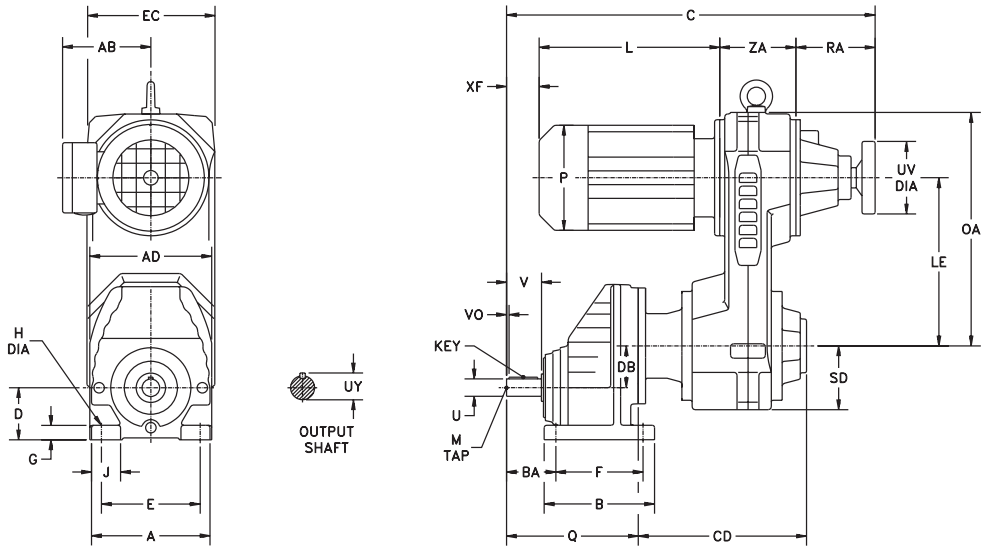

VZ

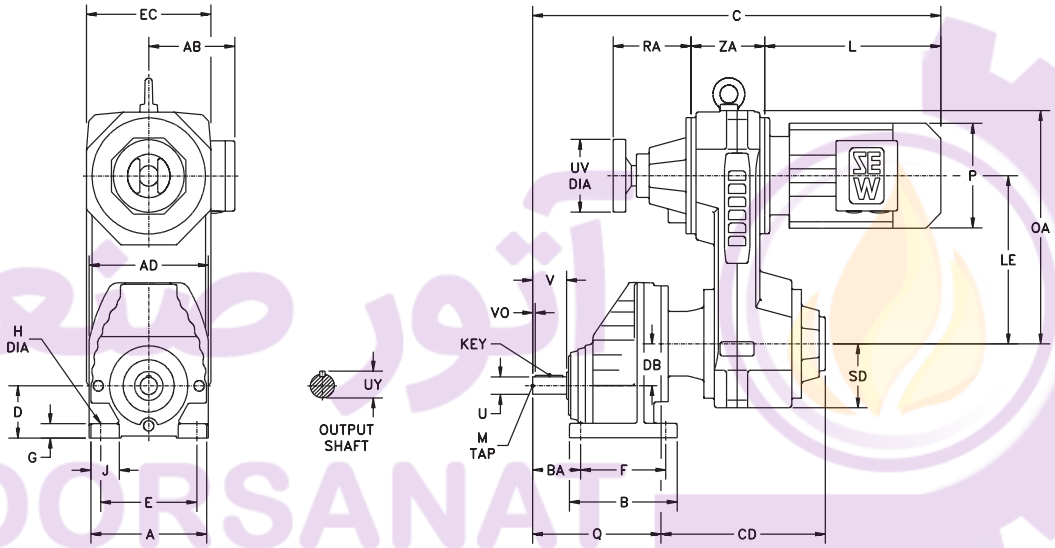

Dimensions are $\frac{\text{inch}}{\text{mm}}$

Gearcase												
Model	**A**	**AD**	**B**	**BA**	**D***	**DB**	**E**	**F**	**G**	**H**	**J**	**Q**
RX87	10.47 266	10.71 272	8.11 206	4.33 110	3.94 100	3.68 93.5	8.46 215	6.30 160	1.18 30	0.69 17.5	2.36 60	10.59 269
RX97	12.60 320	12.91 328	9.45 240	5.51 140	4.41 112	4.57 116	9.84 250	7.28 185	1.38 35	0.87 22	2.76 70	12.44 316
RX107	14.17 360	14.57 370	10.24 260	5.98 152	5.51 140	5.12 130	12.20 310	8.27 210	1.77 45	0.87 22	3.15 80	14.33 364

Output Shaft						
Model	**U***	**UY**	**V**	**VO**	**Key**	**M**
RX87	1.625 40	1.79 43	3.15 80	0.38 5	$\frac{3}{8} \times \frac{3}{8} \times 2\frac{1}{4}$ 12 x 8 x 70	$\frac{5}{8} - 11 \times 1.38$ M16 x 36
RX97	2.125 50	2.35 53.5	3.94 100	0.64 10	$\frac{1}{2} \times \frac{1}{2} \times 2\frac{5}{8}$ 14 x 9 x 80	$\frac{3}{4} - 10 \times 1.61$ M16 x 36
RX107	2.375 60	2.65 64	4.72 120	0.51 5	$\frac{5}{8} \times \frac{5}{8} \times 3\frac{5}{8}$ 18 x 11 x 110	$\frac{3}{4} - 10 \times 1.61$ M20 x 42

*** Note: See page 18 for tolerances.**

Dimensions subject to change without notice.

آتور صنعت ATOORSANAT
SEW EURODRIVE

VARIGEAR®							
Model	**EC**	**LE**	**OA**	**RA**	**SD**	**UV**	**ZA**
VU/VZ21	8.94 227	9.65 245	13.98 355	5.12 130	4.33 110	3.94 100	4.72 120
VU/VZ31	11.14 283	12.01 305	17.52 445	5.91 150	5.43 138	4.92 125	5.98 152
VU/VZ41	13.70 348	14.96 380	21.77 553	7.44 189	6.69 170	7.87 200	7.09 180
VU51	15.67 398	18.11 460	25.91 658	8.66 220	7.68 195	7.87 200	7.87 200

VARIGEAR® VU										
Model		**VU21**	**VU31**			**VU41**			**VU51**	
		DT100	**DT100**	**DV112M**	**DV132S**	**DV132M**	**DV132ML**	**DV160M**	**DV160L**	**DV180**
RX87	**C**	25.75 654	28.70 729	28.70 729	28.70 729	33.15 842	33.15 842	33.15 842	— —	— —
	CD	10.51 267	12.48 317	12.48 317	12.48 317	15.43 392	15.43 392	15.43 392	— —	— —
	XF	3.66 93	***.** ****	3.07 78	1.30 33	2.80 71	0.43 11	0.43 11	— —	— —
RX97	**C**	— —	30.35 771	30.35 771	30.35 771	34.80 884	34.80 884	34.80 884	38.11 968	38.11 968
	CD	— —	12.28 312	12.28 312	12.28 312	15.24 387	15.24 387	15.24 387	17.48 444	17.48 444
	XF	— —	***.** ****	4.72 120	2.95 75	4.45 113	2.09 53	2.09 53	1.77 45	-1.06 -27
RX107	**C**	— —	— —	— —	— —	36.46 926	36.46 926	36.46 926	39.76 1010	39.76 1010
	CD	— —	— —	— —	— —	15.00 381	15.00 381	15.00 381	17.24 438	17.24 438
	XF	— —	— —	— —	— —	6.10 155	3.74 95	3.74 95	3.43 87	0.59 15

VARIGEAR® VZ								
Model		**VZ21**	**VZ31**			**VZ41**		
		DT100	**DT100**	**DV112M**	**DV132S**	**DV132M**	**DV132ML**	**DV160M**
RX87	**C**	29.33 745	30.59 777	32.09 815	33.86 860	35.63 905	37.99 965	37.99 965
	CD	10.51 267	12.48 317	12.48 317	12.48 317	15.43 392	15.43 392	15.43 392
RX97	**C**	— —	32.24 819	33.74 857	35.51 902	37.28 947	39.65 1007	39.65 1007
	CD	— —	12.28 312	12.28 312	12.28 312	15.24 387	15.24 387	15.24 387
RX107	**C**	— —	— —	— —	— —	38.94 989	41.30 1049	41.30 1049
	CD	— —	— —	— —	— —	15.00 381	15.00 381	15.00 381

Motor									
	VU/VZ21	**VU/VZ31**			**VU/VZ41**			**VU51**	
	DT100	**DT100**	**DV112M**	**DV132S**	**DV132M**	**DV132ML**	**DV160M**	**DV160L**	**DV180**
AB	6.89 175	6.89 175	7.40 188	7.40 188	9.13 232	9.13 232	9.13 232	10.04 255	10.55 268
L	12.24 311	12.24 311	13.74 349	15.51 394	15.83 402	18.19 462	18.19 462	19.80 503	22.64 575
P	7.76 197	7.76 197	8.70 221	8.70 221	10.83 275	10.83 275	10.83 275	13.03 331	13.03 331

Dimension AB is to motor conduit box
Eye bolts are removable
Size VU6 is supplied with windless-type control
See page 56 for VARIGEAR® configuration options.

VU

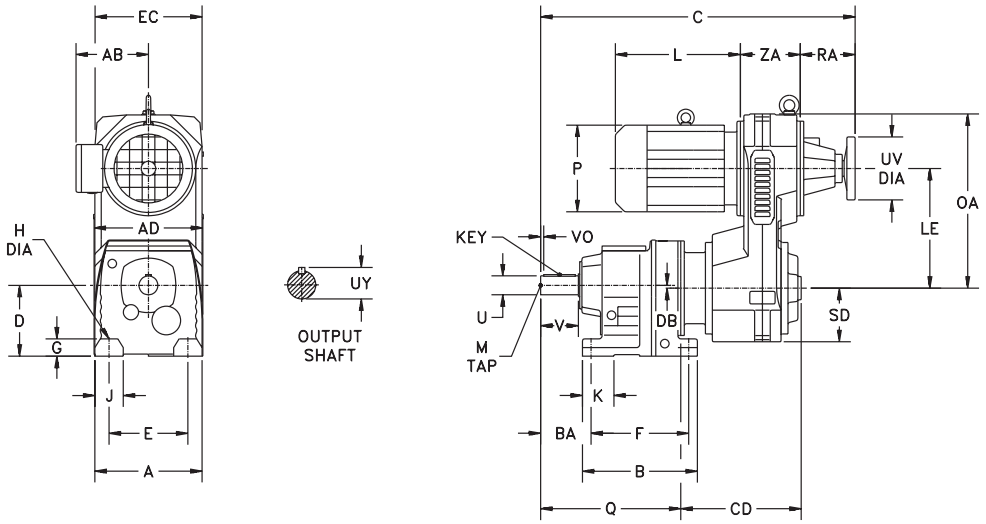

VZ

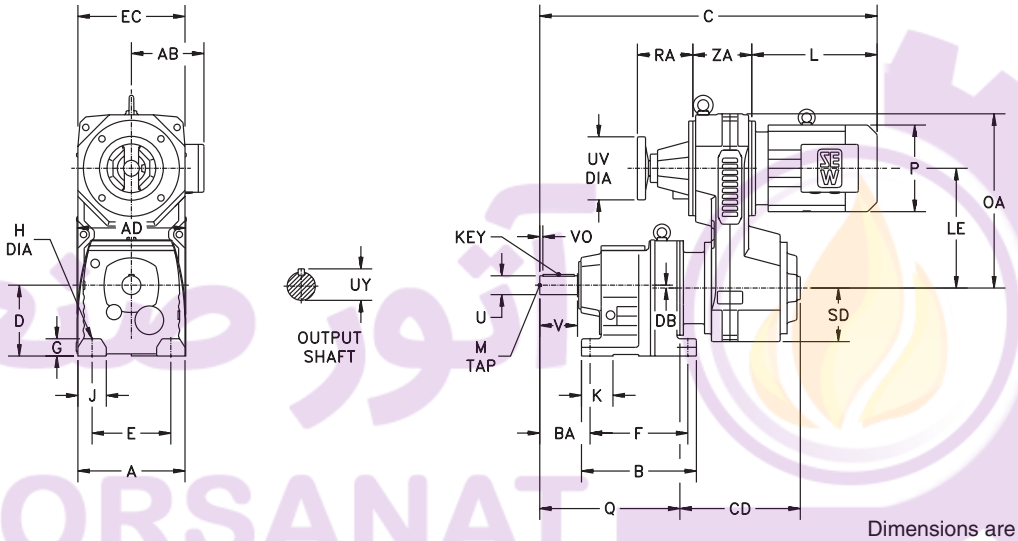

Dimensions are inch / mm

Gearcase													
Model	**A**	**AD**	**B**	**BA**	**D***	**DB**	**E**	**F**	**G**	**H**	**J**	**K**	**Q**
R27	5.71 145	5.94 151	5.98 152	2.95 75	3.54 90	0.13 3.4	4.33 110	5.12 130	0.71 18	0.35 9	1.26 32	1.06 27	7.60 193
R37	5.71 145	6.34 161	6.30 160	2.95 75	3.54 90	0.40 10.1	4.33 110	5.12 130	0.71 18	0.35 9	1.38 35	1.57 40	7.91 201
R47	6.69 170	7.01 178	7.68 195	3.54 90	4.53 115	0.55 14	5.31 135	6.50 165	0.94 24	0.53 13.5	1.65 42	1.97 50	9.25 235
R57	7.48 190	7.95 202	7.87 200	3.94 100	4.53 115	0.44 11.2	5.31 135	6.50 165	0.94 24	0.53 13.5	2.17 55	2.36 60	10.12 257

Output Shaft						
Model	**U***	**UY**	**V**	**VO**	**Key**	**M**
R27	1.000 25	1.11 28	1.97 50	0.26 3.5	$\frac{1}{4} \times \frac{1}{4} \times 1\frac{5}{16}$ 8 x 7 x 40	$\frac{3}{8}$ – 16 × 0.87 M10 x 22
R37	1.000 25	1.11 28	1.97 50	0.26 3.5	$\frac{1}{4} \times \frac{1}{4} \times 1\frac{5}{16}$ 8 x 7 x 40	$\frac{3}{8}$ – 16 × 0.87 M10 x 22
R47	1.250 30	1.36 33	2.36 60	0.26 3.5	$\frac{1}{4} \times \frac{1}{4} \times 1\frac{11}{16}$ 8 x 7 x 50	$\frac{1}{2}$ – 13 × 1.12 M10 x 22
R57	1.375 35	1.51 38	2.76 70	0.43 7	$\frac{5}{16} \times \frac{5}{16} \times 1\frac{13}{16}$ 10 x 8 x 56	$\frac{1}{2}$ – 13 × 1.12 M12 x 28

*** Note: See page 18 for tolerances.**

Dimensions subject to change without notice.

آتور صنعت ATOORSANAT
SEW EURODRIVE

VARIGEAR®							
Model	**EC**	**LE**	**OA**	**RA**	**SD**	**UV**	**ZA**
VU/VZ01	6.93 176	7.17 182	10.59 269	3.86 98	2.83 72	3.15 80	3.15 80
VU/VZ11	7.20 183	9.13 232	12.68 322	4.61 117	3.46 88	3.94 100	3.86 98
VU/VZ21	8.94 227	9.65 245	13.98 355	5.12 130	4.33 110	3.94 100	4.72 120
VU/VZ31	11.14 283	12.01 305	17.52 445	5.91 150	5.43 138	4.92 125	5.98 152

VARIGEAR® VU								
Model		**VU01**		**VU11**	**VU21**	**VU31**		
		DT71	**DT80**	**DT90**	**DT100**	**DT100**	**DV112M**	**DV132S**
R27	**C**	19.09 485	19.09 485	— —	— —	— —	— —	— —
	CD	8.39 213	8.39 213	— —	— —	— —	— —	— —
R37	**C**	19.41 493	19.41 493	21.18 538	— —	— —	— —	— —
	CD	8.39 213	8.39 213	9.37 238	— —	— —	— —	— —
R47	**C**	20.47 520	20.47 520	22.24 565	24.88 632	— —	— —	— —
	CD	8.11 206	8.11 206	9.13 232	10.98 279	— —	— —	— —
R57	**C**	21.34 542	21.34 542	23.11 587	25.75 654	28.78 731	28.78 731	28.78 731
	CD	8.11 206	8.11 206	9.13 232	10.98 279	13.03 331	13.03 331	13.03 331

VARIGEAR® VZ								
Model		**VZ01**		**VZ11**	**VZ21**	**VZ31**		
		DT71	**DT80**	**DT90**	**DT100**	**DT100**	**DV112M**	**DV132S**
R27	**C**	20.31 516	22.28 566	— —	— —	— —	— —	— —
	CD	8.39 213	8.39 213	— —	— —	— —	— —	— —
R37	**C**	20.63 524	22.60 574	24.57 624	— —	— —	— —	— —
	CD	8.39 213	8.39 213	9.37 238	— —	— —	— —	— —
R47	**C**	21.69 551	23.66 601	25.63 651	28.46 723	— —	— —	— —
	CD	8.11 206	8.11 206	9.13 232	10.98 279	— —	— —	— —
R57	**C**	22.56 573	24.53 623	26.50 673	29.33 745	30.67 779	32.17 817	33.94 862
	CD	8.11 206	8.11 206	9.13 232	10.98 279	13.03 331	13.03 331	13.03 331

Motor							
	VU/VZ01		**VU/VZ11**	**VU/VZ21**	**VU/VZ31**		
	DT71	**DT80**	**DT90**	**DT100**	**DT100**	**DV112M**	**DV132S**
AB	5.43 138	5.43 138	6.73 171	6.89 175	6.89 175	7.40 188	7.40 188
L	7.95 202	9.92 252	10.75 273	12.24 311	12.24 311	13.74 349	15.51 394
P	5.71 145	5.71 145	7.76 197	7.76 197	7.76 197	8.70 221	8.70 221

Dimension AB is to motor conduit box
Eye bolts are removable
Size VU6 is supplied with windless-type control
See page 56 for VARIGEAR® configuration options.

Dimensions subject to change without notice.

VU

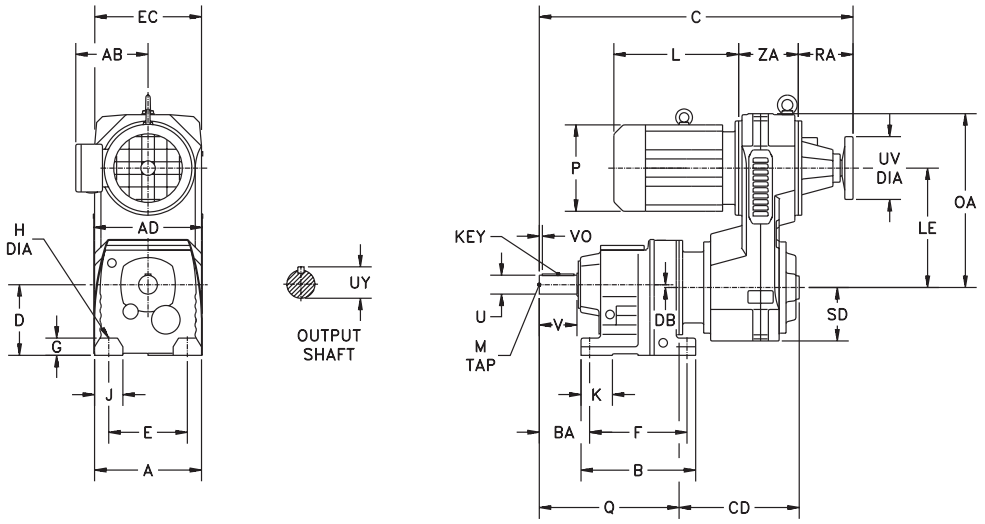

VZ

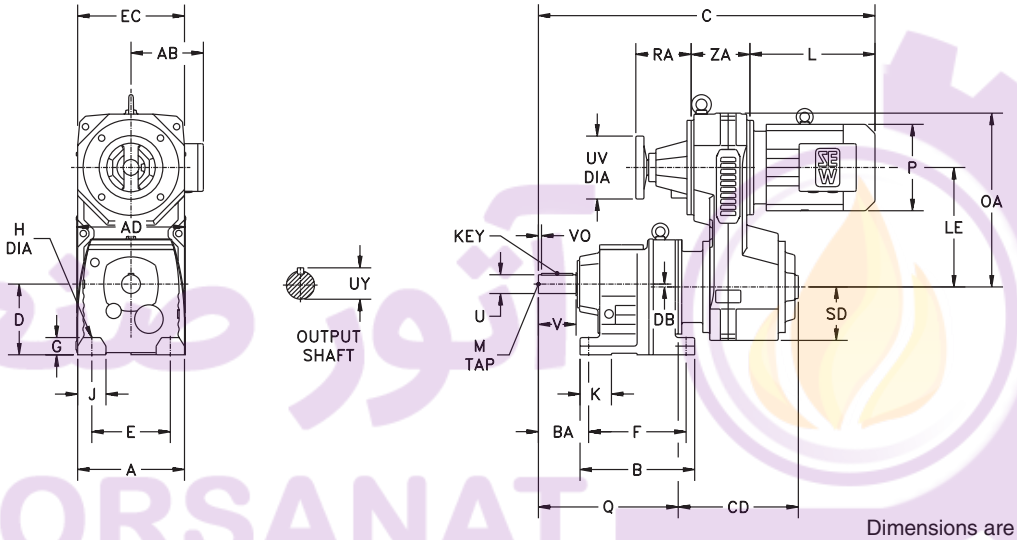

Dimensions are $\frac{\text{inch}}{\text{mm}}$

Gearcase													
Model	**A**	**AD**	**B**	**BA**	**D***	**DB**	**E**	**F**	**G**	**H**	**J**	**K**	**Q**
R67	8.27 210	8.46 215	9.25 235	3.94 100	5.12 130	0.81 20.7	5.91 150	7.68 195	1.18 30	0.55 14	2.36 60	2.36 60	11.02 280
R77	9.06 230	9.25 235	9.65 245	4.53 115	5.51 140	0.63 15.9	6.69 170	8.07 205	1.18 30	0.69 17.5	2.36 60	2.36 60	11.81 300
R87	11.42 290	11.69 297	12.20 310	5.51 140	7.09 180	0.50 12.6	8.46 215	10.24 260	1.77 45	0.69 17.5	2.95 75	3.54 90	14.65 372
R97	13.39 340	13.70 348	14.37 365	6.30 160	8.86 225	0.40 10.2	9.84 250	12.20 310	2.17 55	0.87 22	3.54 90	3.94 100	17.32 440

Output Shaft						
Model	**U***	**UY**	**V**	**VO**	**Key**	**M**
R67	1.375 35	1.51 38	2.76 70	0.43 7	$\frac{5}{16} \times \frac{5}{16} \times 1\frac{13}{16}$ 10 x 8 x 56	$\frac{1}{2} - 13 \times 1.12$ M12 x 28
R77	1.625 40	1.79 43	3.15 80	0.38 5	$\frac{3}{8} \times \frac{3}{8} \times 2\frac{1}{4}$ 12 x 8 x 70	$\frac{5}{8} - 11 \times 1.38$ M16 x 36
R87	2.125 50	2.35 53.5	3.94 100	0.64 10	$\frac{1}{2} \times \frac{1}{2} \times 2\frac{5}{8}$ 14 x 9 x 80	$\frac{3}{4} - 10 \times 1.61$ M16 x 36
R97	2.375 60	2.65 64	4.72 120	0.51 5	$\frac{5}{8} \times \frac{5}{8} \times 3\frac{5}{8}$ 18 x 11 x 110	$\frac{3}{4} - 10 \times 1.61$ M20 x 42

*** Note: See page 18 for tolerances.**

Dimensions subject to change without notice.

آتور صنعت ATOORSANAT
SEW EURODRIVE

VARIGEAR®							
Model	**EC**	**LE**	**OA**	**RA**	**SD**	**UV**	**ZA**
VU/VZ01	6.93 176	7.17 182	10.59 269	3.86 98	2.83 72	3.15 80	3.15 80
VU/VZ11	7.20 183	9.13 232	12.68 322	4.61 117	3.46 88	3.94 100	3.86 98
VU/VZ21	8.94 227	9.65 245	13.98 355	5.12 130	4.33 110	3.94 100	4.72 120
VU/VZ31	11.14 283	12.01 305	17.52 445	5.91 150	5.43 138	4.92 125	5.98 152
VU/VZ41	13.70 348	14.96 380	21.77 553	7.44 189	6.69 170	7.87 200	7.09 180
VU51	15.67 398	18.11 460	25.91 658	8.66 220	7.68 195	7.87 200	7.87 200

VARIGEAR® VU													
Model		**VU01**		**VU11**	**VU21**	**VU31**			**VU41**			**VU51**	
		DT71	**DT80**	**DT90**	**DT100**	**DT100**	**DV112M**	**DV132S**	**DV132M**	**DV132ML**	**DV160M**	**DV160L**	**DV180**
R67	**C**	22.24 565	22.24 565	24.02 610	26.65 677	29.69 754	29.69 754	29.69 754	— —	— —	— —	— —	— —
	CD	8.11 206	8.11 206	9.13 232	10.98 279	13.03 331	13.03 331	13.03 331	— —	— —	— —	— —	— —
R77	**C**	— —	— —	24.57 624	27.13 689	30.12 765	30.12 765	30.12 765	34.57 878	34.57 878	34.57 878	— —	— —
	CD	— —	— —	8.90 226	10.67 271	12.68 322	12.68 322	12.68 322	15.63 397	15.63 397	15.63 397	— —	— —
R87	**C**	— —	— —	— —	29.80 757	32.76 832	32.76 832	32.76 832	37.20 945	37.20 945	37.20 945	40.51 1029	40.51 1029
	CD	— —	— —	— —	10.51 267	12.48 317	12.48 317	12.48 317	15.43 392	15.43 392	15.43 392	17.68 449	17.68 449
R97	**C**	— —	— —	— —	— —	35.24 895	35.24 895	35.24 895	39.69 1008	39.69 1008	39.69 1008	42.99 1092	42.99 1092
	CD	— —	— —	— —	— —	12.28 312	12.28 312	12.28 312	15.24 387	15.24 387	15.24 387	17.48 444	17.48 444

VARIGEAR® VZ											
Model		**VZ01**		**VZ11**	**VZ21**	**VZ31**			**VZ41**		
		DT71	**DT80**	**DT90**	**DT100**	**DT100**	**DV112M**	**DV132S**	**DV132M**	**DV132ML**	**DV160M**
R67	**C**	23.46 596	25.43 646	27.40 696	30.24 768	31.57 802	33.07 840	34.84 885	— —	— —	— —
	CD	8.11 206	8.11 206	9.13 232	10.98 279	13.03 331	13.03 331	13.03 331	— —	— —	— —
R77	**C**	— —	— —	27.95 710	30.71 780	32.01 813	33.50 851	35.28 896	37.05 941	39.41 1001	39.41 1001
	CD	— —	— —	8.90 226	10.67 271	12.68 322	12.68 322	12.68 322	15.63 397	15.63 397	15.63 397
R87	**C**	— —	— —	— —	33.39 848	34.65 880	36.14 918	37.91 963	39.69 1008	42.05 1068	42.05 1068
	CD	— —	— —	— —	10.51 267	12.48 317	12.48 317	12.48 317	15.43 392	15.43 392	15.43 392
R97	**C**	— —	— —	— —	— —	37.13 943	38.62 981	40.39 1026	42.17 1071	44.53 1131	44.53 1131
	CD	— —	— —	— —	— —	12.28 312	12.28 312	12.28 312	15.24 387	15.24 387	15.24 387

Motor												
	VU/VZ01		**VU/VZ11**	**VU/VZ21**	**VU/VZ31**			**VU/VZ41**			**VU51**	
	DT71	**DT80**	**DT90**	**DT100**	**DT100**	**DV112M**	**DV132S**	**DV132M**	**DV132ML**	**DV160M**	**DV160L**	**DV180**
AB	5.43 138	5.43 138	6.73 171	6.89 175	6.89 175	7.40 188	7.40 188	9.13 232	9.13 232	9.13 232	10.04 255	10.55 268
L	7.95 202	9.92 252	10.75 273	12.24 311	12.24 311	13.74 349	15.51 394	15.83 402	18.19 462	18.19 462	19.80 503	22.64 575
P	5.71 145	5.71 145	7.76 197	7.76 197	7.76 197	8.70 221	8.70 221	10.83 275	10.83 275	10.83 275	13.03 331	13.03 331

Dimension AB is to motor conduit box
Size VU6 is supplied with windless-type control

Eye bolts are removable
See page 56 for VARIGEAR® configuration options.

Dimensions subject to change without notice.

VU

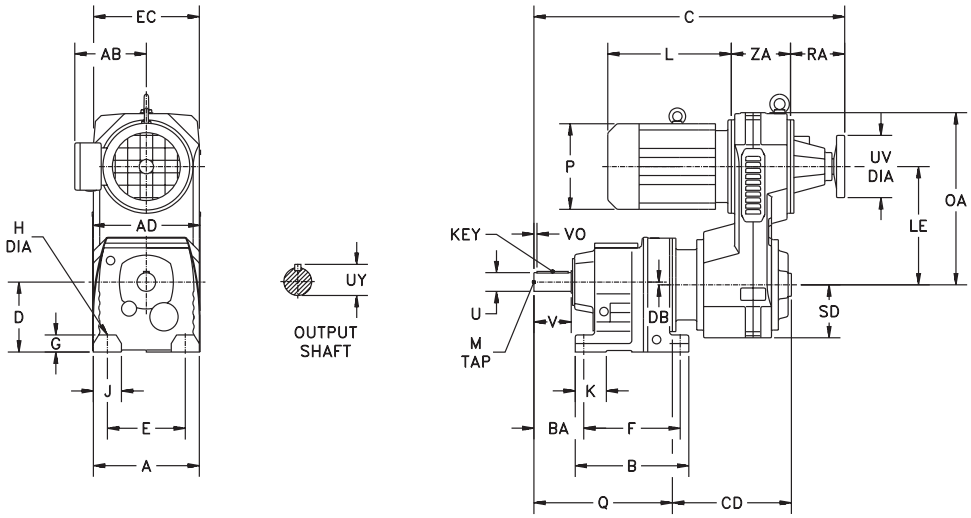

VZ

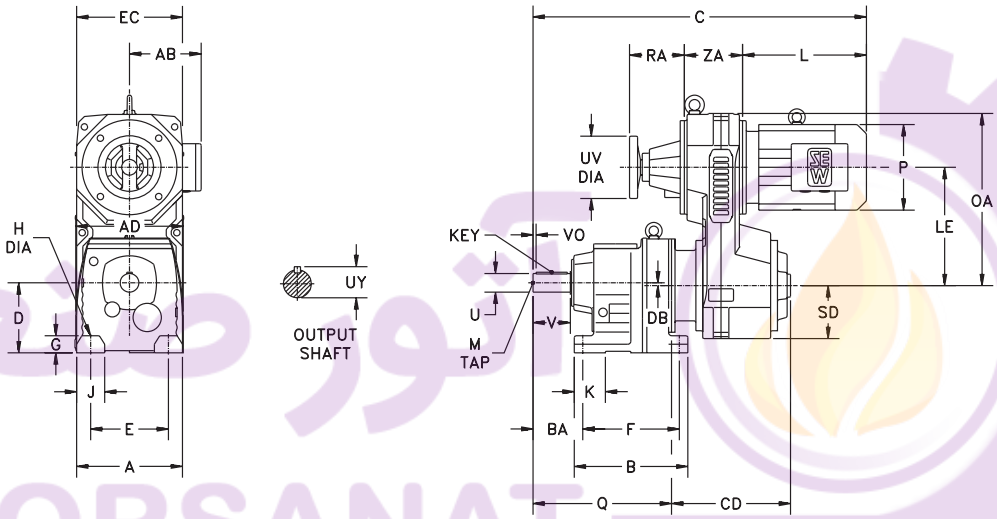

Dimensions are inch / mm

Gearcase													
Model	**A**	**AD**	**B**	**BA**	**D***	**DB**	**E**	**F**	**G**	**H**	**J**	**K**	**Q**
R107	15.75 400	16.10 409	17.32 440	7.28 185	9.84 250	0.80 20.4	11.42 290	14.57 370	2.56 65	1.02 26	4.33 110	4.92 125	19.49 495
R137	17.72 450	18.03 458	19.29 490	8.66 220	12.40 315	0.99 25.1	13.39 340	16.14 410	2.76 70	1.30 33	4.33 110	5.12 130	23.19 589
R147	20.87 530	21.26 540	23.23 590	10.24 260	13.98 355	1.31 33.4	14.96 380	19.69 500	3.15 80	1.54 39	5.91 150	5.91 150	27.36 695
R167	25.98 660	26.38 670	26.38 670	10.63 270	16.73 425	2.36 59.9	19.69 500	22.83 580	3.94 100	1.54 39	6.30 160	6.30 160	31.10 790

Output Shaft						
Model	**U***	**UY**	**V**	**VO**	**Key**	**M**
R107	2.875 70	3.20 74.5	5.51 140	0.67 7.5	$\frac{3}{4} \times \frac{3}{4} \times 4\frac{1}{8}$ 20 x 12 x 125	$\frac{3}{4}$ – 10 × 1.61 M20 x 42
R137	3.625 90	4.01 95	6.69 170	0.63 5	$\frac{7}{8} \times \frac{7}{8} \times 5\frac{3}{8}$ 25 x 14 x 160	1– 8 × 2.13 M24 x 50
R147	4.375 110	4.82 116	8.27 210	1.09 15	1× 1× 6 28 x 16 x 180	1– 8 × 2.13 M24 x 50
R167	4.750 120	5.29 127	8.27 210	0.82 5	$1\frac{1}{4} \times 1\frac{1}{4} \times 6\frac{9}{16}$ 32 x 18 x 200	1– 8 × 2.13 M24 x 50

*** Note: See page 18 for tolerances.**

Dimensions subject to change without notice.

آتور صنعت ATOORSANAT
SEW EURODRIVE

VARIGEAR®							
Model	**EC**	**LE**	**OA**	**RA**	**SD**	**UV**	**ZA**
VU/VZ41	13.70 348	14.96 380	21.77 553	7.44 189	6.69 170	7.87 200	7.09 180
VU51	15.67 398	18.11 460	25.91 658	8.66 220	7.68 195	7.87 200	7.87 200
VU6	18.94 481	22.60 574	31.69 805	6.10 155	9.65 245	15.16 385	8.43 214

VARIGEAR® VU									
Model		**VU41**			**VU51**		**VU6**		
		DV132M	**DV132ML**	**DV160M**	**DV160L**	**DV180**	**DV180**	**DV200**	**DV225**
R107	**C**	41.61 1057	41.61 1057	41.61 1057	44.92 1141	44.92 1141	47.24 1200	47.24 1200	47.24 1200
	CD	15.00 381	15.00 381	15.00 381	17.24 438	17.24 438	26.06 662	26.06 662	26.06 662
R137	**C**	— —	— —	— —	48.35 1228	48.35 1228	50.67 1287	50.67 1287	50.67 1287
	CD	— —	— —	— —	16.97 431	16.97 431	25.79 655	25.79 655	25.79 655
R147	**C**	— —	— —	— —	52.20 1326	52.20 1326	54.53 1385	54.53 1385	54.53 1385
	CD	— —	— —	— —	16.65 423	16.65 423	25.47 647	25.47 647	25.47 647
R167	**C**	— —	— —	— —	— —	— —	59.25 1505	59.25 1505	59.25 1505
	CD	— —	— —	— —	— —	— —	25.16 639	25.16 639	25.16 639

VARIGEAR® VZ				
Model		**VZ41**		
		DV132M	**DV132ML**	**DV160M**
R107	**C**	44.09 1120	46.46 1180	46.46 1180
	CD	15.00 381	15.00 381	15.00 381

Motor								
	VU/VZ41			**VU51**		**VU6**		
	DV132M	**DV132ML**	**DV160M**	**DV160L**	**DV180**	**DV180**	**DV200**	**DV225**
AB	9.13 232	9.13 232	9.13 232	10.04 255	10.55 268	10.55 268	11.81 300	11.97 304
L	15.83 402	18.19 462	18.19 462	19.80 503	22.64 575	22.64 575	24.53 623	28.54 725
P	10.83 275	10.83 275	10.83 275	13.03 331	13.03 331	13.03 331	15.51 394	15.51 394

Dimension AB is to motor conduit box
Eye bolts are removable
Size VU6 is supplied with windless-type control
See page 56 for VARIGEAR® configuration options.

VU

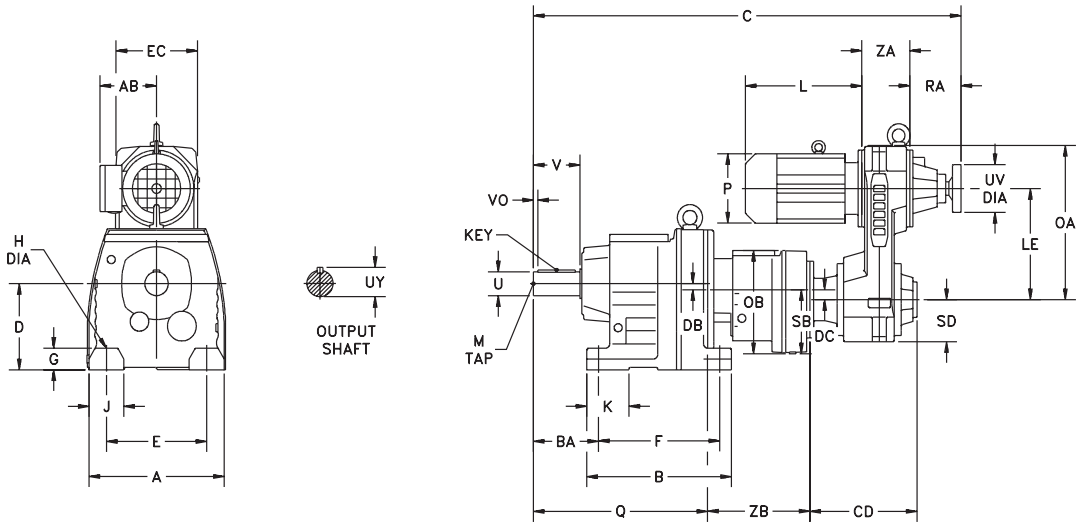

VZ

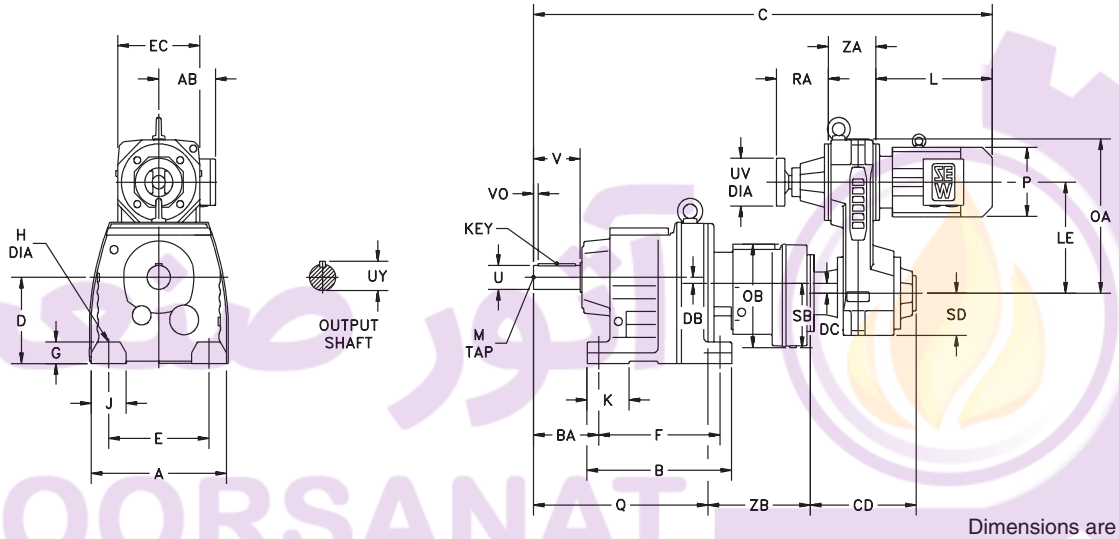

Dimensions are inch / mm

Gearcase																
Model	**A**	**AD**	**B**	**BA**	**D***	**DB**	**DC**	**E**	**F**	**G**	**H**	**J**	**K**	**Q**	**SB**	**ZB**
R47R37	6.69 170	7.01 178	7.68 195	3.54 90	4.53 115	0.55 14	0.40 10.1	5.31 135	6.50 165	0.94 24	0.53 13.5	1.65 42	1.97 50	9.25 235	3.70 94	6.50 165
R57R37	7.48 190	7.95 202	7.87 200	3.94 100	4.53 115	0.44 11.2	0.40 10.1	5.31 135	6.50 165	0.94 24	0.53 13.5	2.17 55	2.36 60	10.12 257	3.70 94	6.50 165
R67R37	8.27 210	8.46 215	9.25 235	3.94 100	5.12 130	0.81 20.7	0.40 10.1	5.91 150	7.68 195	1.18 30	0.55 14	2.36 60	2.36 60	11.02 280	3.70 94	6.50 165
R77R37	9.06 230	9.25 235	9.65 245	4.53 115	5.51 140	0.63 15.9	0.40 10.1	6.69 170	8.07 205	1.18 30	0.69 17.5	2.36 60	2.36 60	11.81 300	3.70 94	6.18 157

Output Shaft						
Model	**U***	**UY**	**V**	**VO**	**Key**	**M**
R47R37	1.250 30	1.36 33	2.36 60	0.26 3.5	$\frac{1}{4} \times \frac{1}{4} \times 1\frac{11}{16}$ 8 x 7 x 50	$\frac{1}{2}$ – 13 × 1.12 M10 x 22
R57R37	1.375 35	1.51 38	2.76 70	0.43 7	$\frac{5}{16} \times \frac{5}{16} \times 1\frac{13}{16}$ 10 x 8 x 56	$\frac{1}{2}$ – 13 × 1.12 M12 x 28
R67R37	1.375 35	1.51 38	2.76 70	0.43 7	$\frac{5}{16} \times \frac{5}{16} \times 1\frac{13}{16}$ 10 x 8 x 56	$\frac{1}{2}$ – 13 × 1.12 M12 x 28
R77R37	1.625 40	1.79 43	3.15 80	0.38 5	$\frac{3}{8} \times \frac{3}{8} \times 2\frac{1}{4}$ 12 x 8 x 70	$\frac{5}{8}$ – 11 × 1.38 M16 x 36

*** Note: See page 18 for tolerances.**

Dimensions subject to change without notice.

آتور صنعت ATOORSANAT
SEW EURODRIVE

VARIGEAR®							
Model	**EC**	**LE**	**OA**	**RA**	**SD**	**UV**	**ZA**
VU/VZ01	6.93 176	7.17 182	10.59 269	3.86 98	2.83 72	3.15 80	3.15 80
VU/VZ11	7.20 183	9.13 232	12.68 322	4.61 117	3.46 88	3.94 100	3.86 98

VARIGEAR® VU				
Model		**VU01**		**VU11**
		DT71	**DT80**	**DT90**
R47R37	**C**	27.24 692	27.24 692	29.02 737
	CD	8.39 213	8.39 213	9.37 238
R57R37	**C**	28.11 714	28.11 714	29.88 759
	CD	8.39 213	8.39 213	9.37 238
R67R37	**C**	29.02 737	29.02 737	30.79 782
	CD	8.39 213	8.39 213	9.37 238
R77R37	**C**	29.49 749	29.49 749	31.26 794
	CD	8.39 213	8.39 213	9.37 238

VARIGEAR® VZ				
Model		**VZ01**		**VZ11**
		DT71	**DT80**	**DT90**
R47R37	**C**	28.46 723	30.43 773	32.40 823
	CD	8.39 213	8.39 213	9.37 238
R57R37	**C**	29.33 745	31.30 795	33.27 845
	CD	8.39 213	8.39 213	9.37 238
R67R37	**C**	30.24 768	32.20 818	34.17 868
	CD	8.39 213	8.39 213	9.37 238
R77R37	**C**	30.71 780	32.68 830	34.65 880
	CD	8.39 213	8.39 213	9.37 238

Motor			
	VU/VZ01		**VU/VZ11**
	DT71	**DT80**	**DT90**
AB	5.43 138	5.43 138	6.73 171
L	7.95 202	9.92 252	10.75 273
P	5.71 145	5.71 145	7.76 197

Dimension AB is to motor conduit box
Eye bolts are removable
Size VU6 is supplied with windless-type control
See page 56 for VARIGEAR® configuration options.

VU

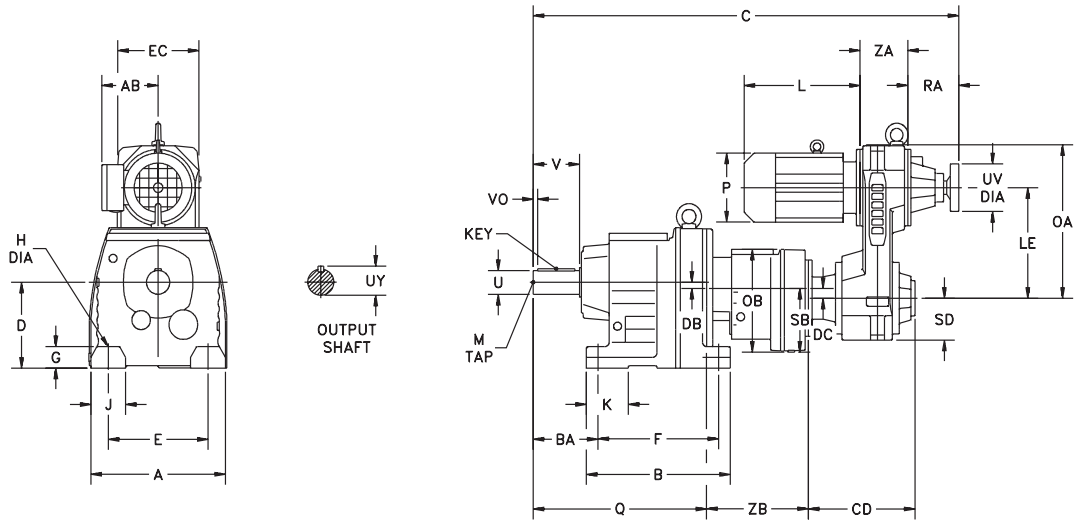

VZ

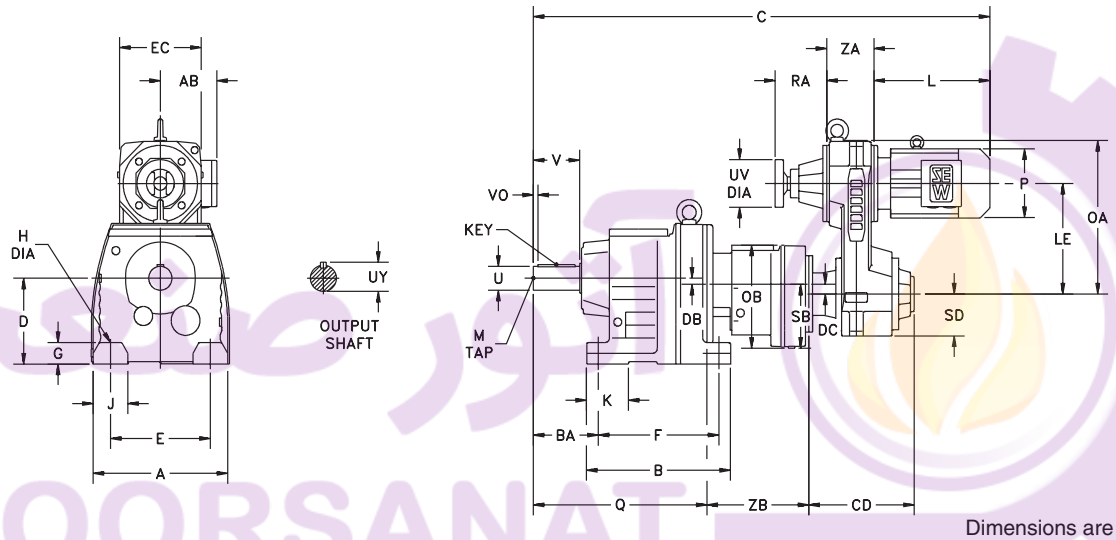

Dimensions are inch / mm

Gearcase																
Model	**A**	**AD**	**B**	**BA**	**D***	**DB**	**DC**	**E**	**F**	**G**	**H**	**J**	**K**	**Q**	**SB**	**ZB**
R87R57	11.42 290	11.69 297	12.20 310	5.51 140	7.09 180	0.50 12.6	0.44 11.2	8.46 215	10.24 260	1.77 45	0.69 17.5	2.95 75	3.54 90	14.65 372	4.76 121	8.50 216
R97R57	13.39 340	13.70 348	14.37 365	6.30 160	8.86 225	0.40 10.2	0.44 11.2	9.84 250	12.20 310	2.17 55	0.87 22	3.54 90	3.94 100	17.32 440	4.76 121	8.31 211
R107R77	15.75 400	16.10 409	17.32 440	7.28 185	9.84 250	0.80 20.4	0.63 15.9	11.42 290	14.57 370	2.56 65	1.02 26	4.33 110	4.92 125	19.49 495	5.67 144	9.72 247
R137R77	17.72 450	18.03 458	19.29 490	8.66 220	12.40 315	0.99 25.1	0.63 15.9	13.39 340	16.14 410	2.76 70	1.30 33	4.33 110	5.12 130	23.19 589	5.67 144	9.45 240

Output Shaft						
Model	**U***	**UY**	**V**	**VO**	**Key**	**M**
R87R57	2.125 50	2.35 53.5	3.94 100	0.64 10	$\frac{1}{2} \times \frac{1}{2} \times 2\frac{5}{8}$ 14 x 9 x 80	$\frac{3}{4} - 10 \times 1.61$ M16 x 36
R97R57	2.375 60	2.65 64	4.72 120	0.51 5	$\frac{5}{8} \times \frac{5}{8} \times 3\frac{5}{8}$ 18 x 11 x 110	$\frac{3}{4} - 10 \times 1.61$ M20 x 42
R107R77	2.875 70	3.20 74.5	5.51 140	0.67 7.5	$\frac{3}{4} \times \frac{3}{4} \times 4\frac{1}{8}$ 20 x 12 x 125	$\frac{3}{4} - 10 \times 1.61$ M20 x 42
R137R77	3.625 90	4.01 95	6.69 170	0.63 5	$\frac{7}{8} \times \frac{7}{8} \times 5\frac{3}{8}$ 25 x 14 x 160	$1 - 8 \times 2.13$ M24 x 50

*** Note: See page 18 for tolerances.**

Dimensions subject to change without notice.

آتور صنعت ATOORSANAT
SEW EURODRIVE

VARIGEAR®							
Model	**EC**	**LE**	**OA**	**RA**	**SD**	**UV**	**ZA**
VU/VZ01	6.93 176	7.17 182	10.59 269	3.86 98	2.83 72	3.15 80	3.15 80
VU/VZ11	7.20 183	9.13 232	12.68 322	4.61 117	3.46 88	3.94 100	3.86 98
VU/VZ21	8.94 227	9.65 245	13.98 355	5.12 130	4.33 110	3.94 100	4.72 120
VU/VZ31	11.14 283	12.01 305	17.52 445	5.91 150	5.43 138	4.92 125	5.98 152
VU/VZ41	13.70 348	14.96 380	21.77 553	7.44 189	6.69 170	7.87 200	7.09 180

VARIGEAR® VU											
Model		**VU01**		**VU11**	**VU21**	**VU31**			**VU41**		
		DT71	**DT80**	**DT90**	**DT100**	**DT100**	**DV112M**	**DV132S**	**DV132M**	**DV132ML**	**DV160M**
R87R57	**C**	34.37 873	34.37 873	36.14 918	38.78 985	41.81 1062	41.81 1062	41.81 1062	— —	— —	— —
	CD	8.11 206	8.11 206	9.13 232	10.98 279	13.03 331	13.03 331	13.03 331	— —	— —	— —
R97R57	**C**	36.85 936	36.85 936	38.62 981	41.26 1048	44.29 1125	44.29 1125	44.29 1125	— —	— —	— —
	CD	8.11 206	8.11 206	9.13 232	10.98 279	13.03 331	13.03 331	13.03 331	— —	— —	— —
R107R77	**C**	— —	— —	41.97 1066	44.53 1131	47.52 1207	47.52 1207	47.52 1207	51.97 1320	51.97 1320	51.97 1320
	CD	— —	— —	8.90 226	10.67 271	12.68 322	12.68 322	12.68 322	15.63 397	15.63 397	15.63 397
R137R77	**C**	— —	— —	45.39 1153	47.95 1218	50.94 1294	50.94 1294	50.94 1294	55.39 1407	55.39 1407	55.39 1407
	CD	— —	— —	8.90 226	10.67 271	12.68 322	12.68 322	12.68 322	15.63 397	15.63 397	15.63 397

VARIGEAR® VZ											
Model		**VZ01**		**VZ11**	**VZ21**	**VZ31**			**VZ41**		
		DT71	**DT80**	**DT90**	**DT100**	**DT100**	**DV112M**	**DV132S**	**DV132M**	**DV132ML**	**DV160M**
R87R57	C	35.59 904	37.56 954	39.53 1004	42.36 1076	43.70 1110	45.20 1148	46.97 1193	— —	— —	— —
	CD	8.11 206	8.11 206	9.13 232	10.98 279	13.03 331	13.03 331	13.03 331	— —	— —	— —
R97R57	C	38.07 967	40.04 1017	42.01 1067	44.84 1139	46.18 1173	47.68 1211	49.45 1256	— —	— —	— —
	CD	8.11 206	8.11 206	9.13 232	10.98 279	13.03 331	13.03 331	13.03 331	— —	— —	— —
R107R77	C	— —	— —	45.35 1152	48.11 1222	49.41 1255	50.91 1293	52.68 1338	54.45 1383	56.81 1443	56.81 1443
	CD	— —	— —	8.90 226	10.67 271	12.68 322	12.68 322	12.68 322	15.63 397	15.63 397	15.63 397
R137R77	C	— —	— —	48.78 1239	51.54 1309	52.83 1342	54.33 1380	56.10 1425	57.87 1470	60.24 1530	60.24 1530
	CD	— —	— —	8.90 226	10.67 271	12.68 322	12.68 322	12.68 322	15.63 397	15.63 397	15.63 397

Motor										
	VU/VZ01		**VU/VZ11**	**VU/VZ21**	**VU/VZ31**			**VU/VZ41**		
	DT71	**DT80**	**DT90**	**DT100**	**DT100**	**DV112M**	**DV132S**	**DV132M**	**DV132ML**	**DV160M**
AB	5.43 138	5.43 138	6.73 171	6.89 175	6.89 175	7.40 188	7.40 188	9.13 232	9.13 232	9.13 232
L	7.95 202	9.92 252	10.75 273	12.24 311	12.24 311	13.74 349	15.51 394	15.83 402	18.19 462	18.19 462
P	5.71 145	5.71 145	7.76 197	7.76 197	7.76 197	8.70 221	8.70 221	10.83 275	10.83 275	10.83 275

Dimension AB is to motor conduit box
Size VU6 is supplied with windless-type control

Eye bolts are removable
See page 56 for VARIGEAR® configuration options.

Dimensions subject to change without notice.

VU

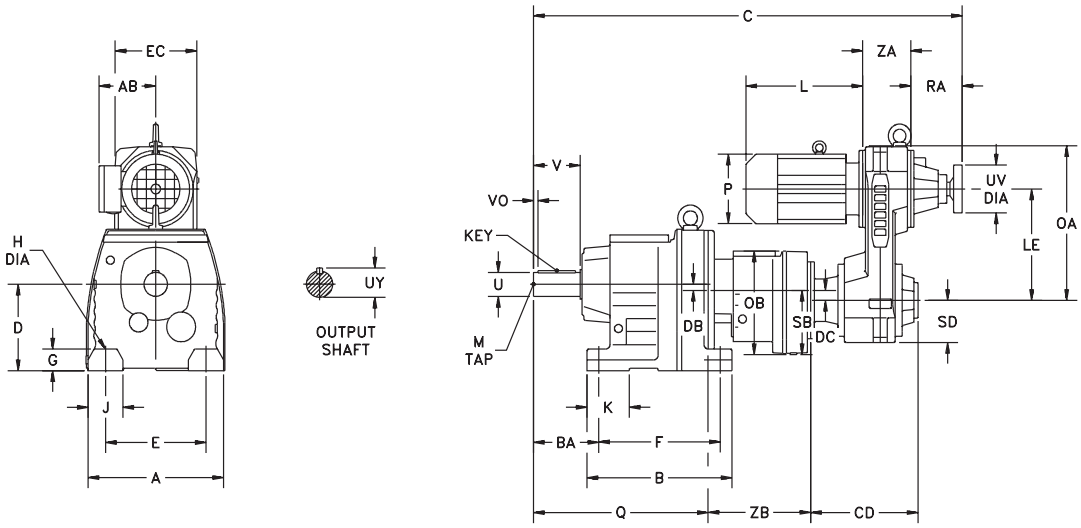

VZ

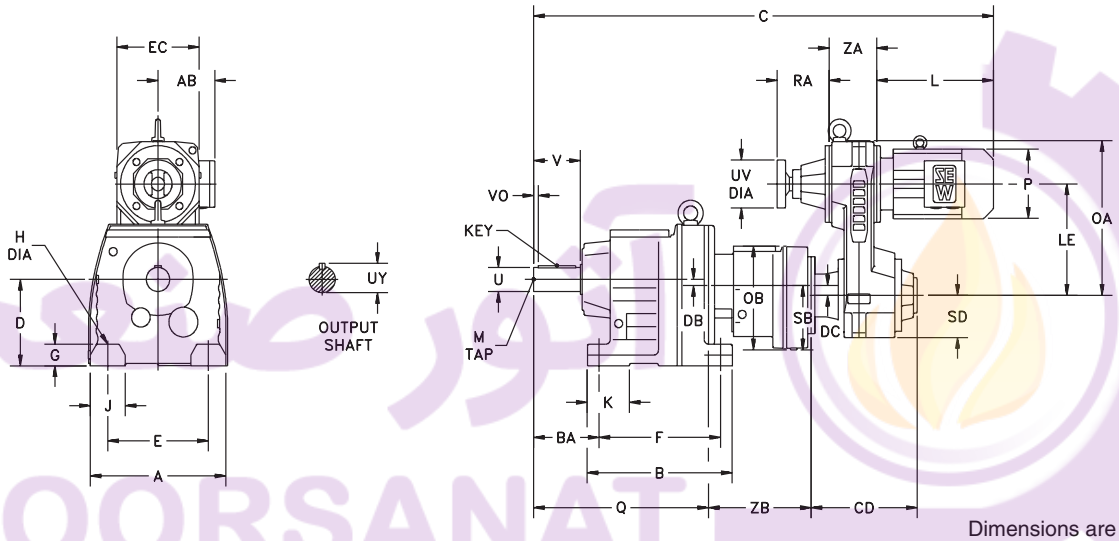

Dimensions are inch / mm

Gearcase																
Model	**A**	**AD**	**B**	**BA**	**D***	**DB**	**DC**	**E**	**F**	**G**	**H**	**J**	**K**	**Q**	**SB**	**ZB**
R147R77	20.87 530	21.26 540	23.23 590	10.24 260	13.98 355	1.31 33.4	0.63 15.9	14.96 380	19.69 500	3.15 80	1.54 39	5.91 150	5.91 150	27.36 695	5.67 144	9.13 232
R147R87	20.87 530	21.26 540	23.23 590	10.24 260	13.98 355	1.31 33.4	0.50 12.6	14.96 380	19.69 500	3.15 80	1.54 39	5.91 150	5.91 150	27.36 695	7.24 184	11.02 280
R167R97	25.98 660	26.38 670	26.38 670	10.63 270	16.73 425	2.36 59.9	0.40 10.2	19.69 500	22.83 580	3.94 100	1.54 39	6.30 160	6.30 160	31.10 790	9.06 230	12.80 325
R167R107	25.98 660	26.38 670	26.38 670	10.63 270	16.73 425	2.36 59.9	0.80 20.4	19.69 500	22.83 580	3.94 100	1.54 39	6.30 160	6.30 160	31.10 790	10.04 255	15.04 382

Output Shaft						
Model	**U***	**UY**	**V**	**VO**	**Key**	**M**
R147R77	4.375 110	4.82 116	8.27 210	1.09 15	1× 1× 6 28 x 16 x 180	1– 8 × 2.13 M24 x 50
R147R87	4.375 110	4.82 116	8.27 210	1.09 15	1× 1× 6 28 x 16 x 180	1– 8 × 2.13 M24 x 50
R167R97	4.750 120	5.29 127	8.27 210	0.82 5	1¼ × 1¼ × 6 9/16 32 x 18 x 200	1– 8 × 2.13 M24 x 50
R167R107	4.750 120	5.29 127	8.27 210	0.82 5	1¼ × 1¼ × 6 9/16 32 x 18 x 200	1– 8 × 2.13 M24 x 50

*** Note: See page 18 for tolerances.**

Dimensions subject to change without notice.

آتور صنعت ATOORSANAT
SEW EURODRIVE

VARIGEAR®							
Model	**EC**	**LE**	**OA**	**RA**	**SD**	**UV**	**ZA**
VU/VZ11	7.20 183	9.13 232	12.68 322	4.61 117	3.46 88	3.94 100	3.86 98
VU/VZ21	8.94 227	9.65 245	13.98 355	5.12 130	4.33 110	3.94 100	4.72 120
VU/VZ31	11.14 283	12.01 305	17.52 445	5.91 150	5.43 138	4.92 125	5.98 152
VU/VZ41	13.70 348	14.96 380	21.77 553	7.44 189	6.69 170	7.87 200	7.09 180
VU51	15.67 398	18.11 460	25.91 658	8.66 220	7.68 195	7.87 200	7.87 200
VU6	18.94 481	22.60 574	31.69 805	6.10 155	9.65 245	15.16 385	8.43 214

VARIGEAR® VU														
Model		**VU11**	**VU21**	**VU31**			**VU41**			**VU51**		**VU6**		
		DT90	**DT100**	**DT100**	**DV112M**	**DV132S**	**DV132M**	**DV132ML**	**DV160M**	**DV160L**	**DV180**	**DV180**	**DV200**	**DV225**
R147R77	**C**	49.25 1251	51.81 1316	54.80 1392	54.80 1392	54.80 1392	59.25 1505	59.25 1505	59.25 1505	— —	— —	— —	— —	— —
	CD	8.90 226	10.67 271	12.68 322	12.68 322	12.68 322	15.63 397	15.63 397	15.63 397	— —	— —	— —	— —	— —
R147R87	**C**	— —	53.54 1360	56.50 1435	56.50 1435	56.50 1435	60.94 1548	60.94 1548	60.94 1548	64.25 1632	64.25 1632	— —	— —	— —
	CD	— —	10.51 267	12.48 317	12.48 317	12.48 317	15.43 392	15.43 392	15.43 392	17.68 449	17.68 449	— —	— —	— —
R167R97	**C**	— —	— —	61.81 1570	61.81 1570	61.81 1570	66.26 1683	66.26 1683	66.26 1683	69.57 1767	69.57 1767	— —	— —	— —
	CD	— —	— —	12.28 312	12.28 312	12.28 312	15.24 387	15.24 387	15.24 387	17.48 444	17.48 444	— —	— —	— —
R167R107	**C**	— —	— —	— —	— —	— —	68.27 1734	68.27 1734	68.27 1734	71.57 1818	71.57 1818	73.90 1877	73.90 1877	73.90 1877
	CD	— —	— —	— —	— —	— —	15.00 381	15.00 381	15.00 381	17.24 438	17.24 438	26.06 662	26.06 662	26.06 662

VARIGEAR® VZ									
Model		**VZ11**	**VZ21**	**VZ31**			**VZ41**		
		DT90	**DT100**	**DT100**	**DV112M**	**DV132S**	**DV132M**	**DV132ML**	**DV160M**
R147R77	**C**	52.64 1337	55.39 1407	56.69 1440	58.19 1478	59.96 1523	61.73 1568	64.09 1628	64.09 1628
	CD	8.90 226	10.67 271	12.68 322	12.68 322	12.68 322	15.63 397	15.63 397	15.63 397
R147R87	**C**	— —	57.13 1451	58.39 1483	59.88 1521	61.65 1566	63.43 1611	65.79 1671	65.79 1671
	CD	— —	10.51 267	12.48 317	12.48 317	12.48 317	15.43 392	15.43 392	15.43 392
R167R97	**C**	— —	— —	63.70 1618	65.20 1656	66.97 1701	68.74 1746	71.10 1806	71.10 1806
	CD	— —	— —	12.28 312	12.28 312	12.28 312	15.24 387	15.24 387	15.24 387
R167R107	**C**	— —	— —	— —	— —	— —	70.75 1797	73.11 1857	73.11 1857
	CD	— —	— —	— —	— —	— —	15.00 381	15.00 381	15.00 381

Motor													
	VU/VZ11	**VU/VZ21**	**VU/VZ31**			**VU/VZ41**			**VU51**		**VU6**		
	DT90	**DT100**	**DT100**	**DV112M**	**DV132S**	**DV132M**	**DV132ML**	**DV160M**	**DV160L**	**DV180**	**DV180**	**DV200**	**DV225**
AB	6.73 171	6.89 175	6.89 175	7.40 188	7.40 188	9.13 232	9.13 232	9.13 232	10.04 255	10.55 268	10.55 268	11.81 300	11.97 304
L	10.75 273	12.24 311	12.24 311	13.74 349	15.51 394	15.83 402	18.19 462	18.19 462	19.80 503	22.64 575	22.64 575	24.53 623	28.54 725
P	7.76 197	7.76 197	7.76 197	8.70 221	8.70 221	10.83 275	10.83 275	10.83 275	13.03 331	13.03 331	13.03 331	15.51 394	15.51 394

Dimension AB is to motor conduit box
Size VU6 is supplied with windless-type control

Eye bolts are removable
See page 56 for VARIGEAR® configuration options.

Dimensions subject to change without notice.

VU

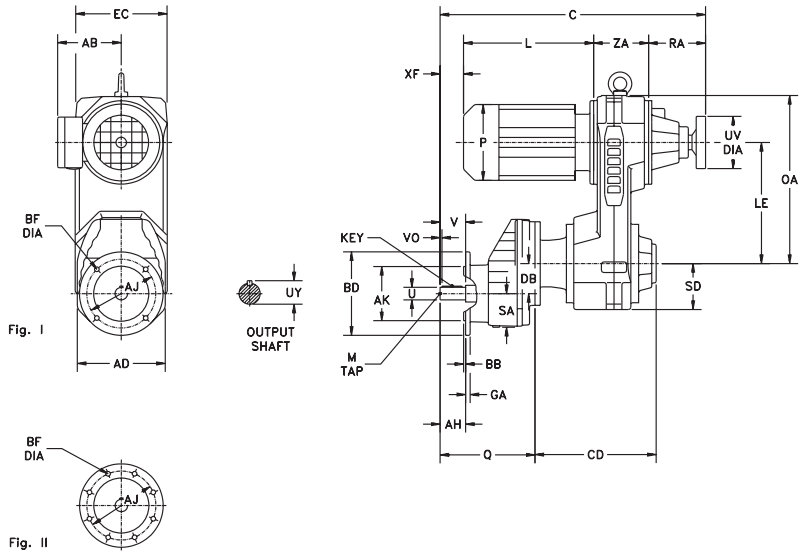

VZ

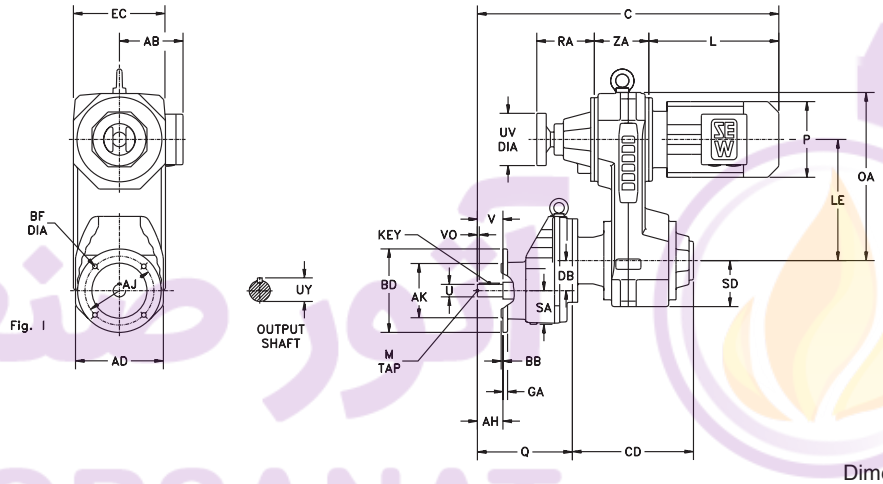

Dimensions are inch / mm

Gearcase					Output Shaft					
Model	**AD**	**DB**	**Q**	**SA**	**U***	**UY**	**V**	**VO**	**Key**	**M**
RXF57	6.38 162	2.05 52	6.85 174	2.44 62	0.750 20	0.83 22.5	1.57 40	0.23 3.5	3/16 × 3/16 × 1 1/16 6 x 6 x 32	1/4 – 20 × 0.63 M6 x 16
RXF67	6.89 175	2.36 60	7.91 201	2.76 70	1.000 25	1.11 28	1.97 50	0.26 3.5	1/4 × 1/4 × 1 5/16 8 x 7 x 40	3/8 – 16 × 0.87 M10 x 22

Flange								
						Specify BD dimension when ordering		
Model		**AH**	**AJ**	**AK***	**BB**	**BD**	**BF**	**GA**
RXF57	**Option 1**	1.57 40	4.53 115	3.740 95	0.12 3	5.51 140	0.35 9	0.39 10
	Option 2	1.57 40	5.12 130	4.331 110	0.14 3.5	6.30 160	0.35 9	0.39 10
	Option 3	1.57 40	6.50 165	5.118 130	0.14 3.5	7.87 200	0.43 11	0.47 12
RXF67	**Option 1**	1.97 50	5.12 130	4.331 110	0.14 3.5	6.30 160	0.35 9	0.39 10
	Option 2	1.97 50	6.50 165	5.118 130	0.14 3.5	7.87 200	0.43 11	0.47 12
	Option 3	1.97 50	8.46 215	7.087 180	0.16 4	9.84 250	0.53 13.5	0.59 15

*** Note: See page 18 for tolerances.**

Dimensions subject to change without notice.

آتور صنعت ATOORSANAT SEW EURODRIVE

VARIGEAR®							
Model	**EC**	**LE**	**OA**	**RA**	**SD**	**UV**	**ZA**
VU/VZ01	6.93 176	7.17 182	10.59 269	3.86 98	2.83 72	3.15 80	3.15 80
VU/VZ11	7.20 183	9.13 232	12.68 322	4.61 117	3.46 88	3.94 100	3.86 98
VU/VZ21	8.94 227	9.65 245	13.98 355	5.12 130	4.33 110	3.94 100	4.72 120

VARIGEAR® VU					
Model		**VU01**		**VU11**	**VU21**
		DT71	**DT80**	**DT90**	**DT100**
RXF57	**C**	18.07 459	18.07 459	19.84 504	22.48 571
	CD	8.11 206	8.11 206	9.13 232	10.98 279
	XF	3.11 79	1.14 29	0.63 16	0.39 10
RXF67	**C**	19.13 486	19.13 486	20.91 531	23.54 598
	CD	8.11 206	8.11 206	9.13 232	10.98 279
	XF	4.17 106	2.20 56	1.69 43	1.46 37

VARIGEAR® VZ					
Model		**VZ01**		**VZ11**	**VZ21**
		DT71	**DT80**	**DT90**	**DT100**
RXF57	**C**	19.29 490	21.26 540	23.23 590	26.06 662
	CD	8.11 206	8.11 206	9.13 232	10.98 279
RXF67	**C**	20.35 517	22.32 567	24.29 617	27.13 689
	CD	8.11 206	8.11 206	9.13 232	10.98 279

Motor				
	VU/VZ01		**VU/VZ11**	**VU/VZ21**
	DT71	**DT80**	**DT90**	**DT100**
AB	5.43 138	5.43 138	6.73 171	6.89 175
L	7.95 202	9.92 252	10.75 273	12.24 311
P	5.71 145	5.71 145	7.76 197	7.76 197

Dimension AB is to motor conduit box
Eye bolts are removable
Size VU6 is supplied with windless-type control
See page 56 for VARIGEAR® configuration options.

ATOORSANAT آتور صنعت

VU

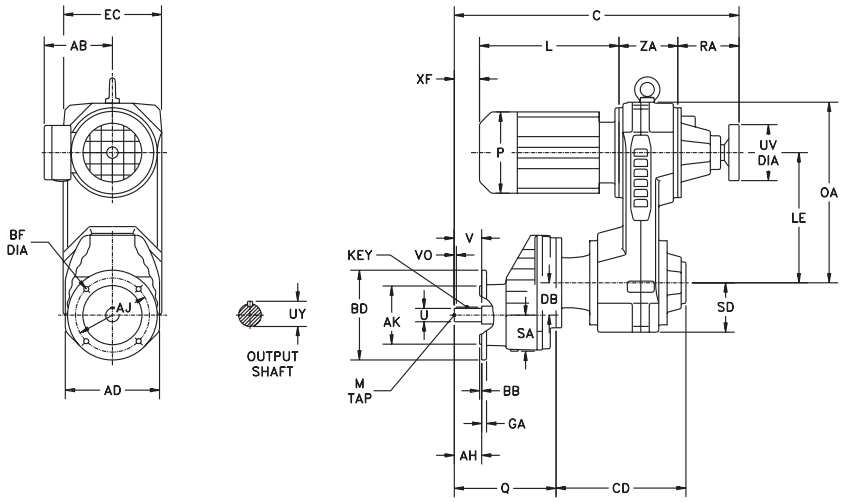

VZ

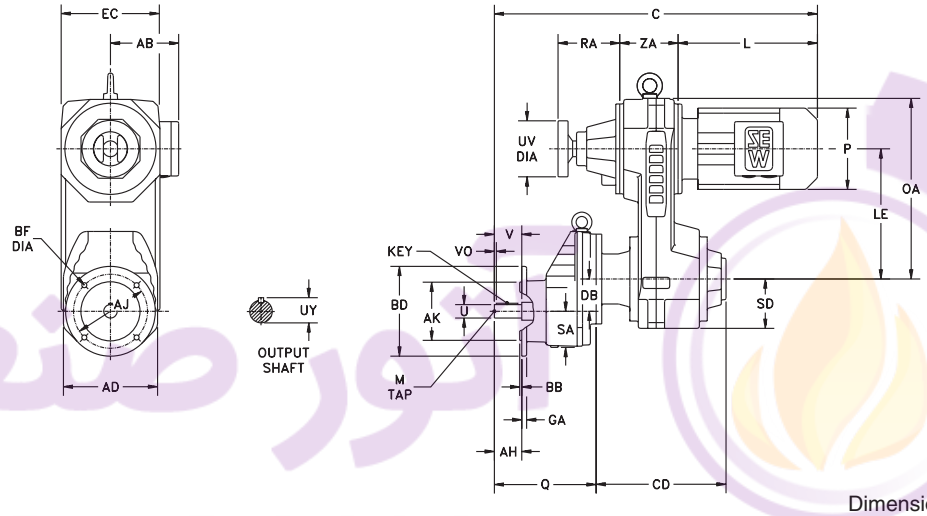

Dimensions are $\frac{\text{inch}}{\text{mm}}$

	Gearcase				Output Shaft					
Model	**AD**	**DB**	**Q**	**SA**	**U***	**UY**	**V**	**VO**	**Key**	**M**
RXF77	8.27 210	2.83 72	8.94 227	3.07 78	1.250 30	1.36 33	2.36 60	0.26 3.5	$\frac{1}{4} \times \frac{1}{4} \times 1\frac{11}{16}$ 8 x 7 x 50	$\frac{1}{2}$ – 13 × 1.12 M10 x 22
RXF87	10.71 272	3.68 93.5	10.59 269	3.86 98	1.625 40	1.79 43	3.15 80	0.38 5	$\frac{3}{8} \times \frac{3}{8} \times 2\frac{1}{4}$ 12 x 8 x 70	$\frac{5}{8}$ – 11 × 1.38 M16 x 36
RXF97	12.91 328	4.57 116	12.44 316	4.65 118	2.125 50	2.35 53.5	3.94 100	0.64 10	$\frac{1}{2} \times \frac{1}{2} \times 2\frac{5}{8}$ 14 x 9 x 80	$\frac{3}{4}$ – 10 × 1.61 M16 x 36

		Flange						Specify BD dimension when ordering
Model		**AH**	**AJ**	**AK***	**BB**	**BD**	**BF**	**GA**
RXF77	**Option 1**	2.36 60	6.50 165	5.118 130	0.14 3.5	7.87 200	0.43 11	0.47 12
	Option 2	2.36 60	8.46 215	7.087 180	0.16 4	9.84 250	0.53 13.5	0.59 15
RXF87	**Option 1**	3.15 80	8.46 215	7.087 180	0.16 4	9.84 250	0.53 13.5	0.73 18.5
	Option 2	3.15 80	10.43 265	9.055 230	0.16 4	11.81 300	0.53 13.5	0.73 18.5
RXF97	**Option 1**	3.94 100	10.43 265	9.055 230	0.16 4	11.81 300	0.53 13.5	0.77 19.5
	Option 2	3.94 100	11.81 300	9.843 250	0.20 5	13.78 350	0.69 17.5	0.83 21

*** Note: See page 18 for tolerances.**

Dimensions subject to change without notice.

آتور صنعت ATOORSANAT
SEW EURODRIVE

VARIGEAR®							
Model	**EC**	**LE**	**OA**	**RA**	**SD**	**UV**	**ZA**
VU/VZ11	7.20 183	9.13 232	12.68 322	4.61 117	3.46 88	3.94 100	3.86 98
VU/VZ21	8.94 227	9.65 245	13.98 355	5.12 130	4.33 110	3.94 100	4.72 120
VU/VZ31	11.14 283	12.01 305	17.52 445	5.91 150	5.43 138	4.92 125	5.98 152
VU/VZ41	13.70 348	14.96 380	21.77 553	7.44 189	6.69 170	7.87 200	7.09 180
VU51	15.67 398	18.11 460	25.91 658	8.66 220	7.68 195	7.87 200	7.87 200

VARIGEAR® VU											
Model		**VU11**	**VU21**	**VU31**			**VU41**			**VU51**	
		DT90	**DT100**	**DT100**	**DV112M**	**DV132S**	**DV132M**	**DV132ML**	**DV160M**	**DV160L**	**DV180**
RXF77	**C**	21.69 551	24.25 616	27.24 692	27.24 692	27.24 692	31.69 805	31.69 805	31.69 805	— —	— —
	CD	8.90 226	10.67 271	12.68 322	12.68 322	12.68 322	15.63 397	15.63 397	15.63 397	— —	— —
	XF	2.48 63	2.17 55	***.** ****	1.61 41	-0.16 -4	— —	— —	— —	— —	— —
RXF87	**C**	— —	25.75 654	28.70 729	28.70 729	28.70 729	33.15 842	33.15 842	33.15 842	36.46 926	36.46 926
	CD	— —	10.51 267	12.48 317	12.48 317	12.48 317	15.43 392	15.43 392	15.43 392	17.68 449	17.68 449
	XF	— —	3.66 93	***.** ****	3.07 78	1.30 33	2.80 71	0.43 11	0.43 11	— —	— —
RXF97	**C**	— —	— —	30.35 771	30.35 771	30.35 771	34.80 884	34.80 884	34.80 884	38.11 968	38.11 968
	CD	— —	— —	12.28 312	12.28 312	12.28 312	15.24 387	15.24 387	15.24 387	17.48 444	17.48 444
	XF	— —	— —	***.** ****	4.72 120	2.95 75	4.45 113	2.09 53	2.09 53	1.77 45	-1.06 -27

VARIGEAR® VZ									
Model		**VZ11**	**VZ21**	**VZ31**			**VZ41**		
		DT90	**DT100**	**DT100**	**DV112M**	**DV132S**	**DV132M**	**DV132ML**	**DV160M**
RXF77	**C**	25.08 637	27.83 707	29.13 740	30.63 778	32.40 823	34.17 868	36.54 928	36.54 928
	CD	8.90 226	10.67 271	12.68 322	12.68 322	12.68 322	15.63 397	15.63 397	15.63 397
RXF87	**C**	— —	29.33 745	30.59 777	32.09 815	33.86 860	35.63 905	37.99 965	37.99 965
	CD	— —	10.51 267	12.48 317	12.48 317	12.48 317	15.43 392	15.43 392	15.43 392
RXF97	**C**	— —	— —	32.24 819	33.74 857	35.51 902	37.28 947	39.65 1007	39.65 1007
	CD	— —	— —	12.28 312	12.28 312	12.28 312	15.24 387	15.24 387	15.24 387

Motor										
	VU/VZ11	**VU/VZ21**	**VU/VZ31**			**VU/VZ41**			**VU51**	
	DT90	**DT100**	**DT100**	**DV112M**	**DV132S**	**DV132M**	**DV132ML**	**DV160M**	**DV160L**	**DV180**
AB	6.73 171	6.89 175	6.89 175	7.40 188	7.40 188	9.13 232	9.13 232	9.13 232	10.04 255	10.55 268
L	10.75 273	12.24 311	12.24 311	13.74 349	15.51 394	15.83 402	18.19 462	18.19 462	19.80 503	22.64 575
P	7.76 197	7.76 197	7.76 197	8.70 221	8.70 221	10.83 275	10.83 275	10.83 275	13.03 331	13.03 331

Dimension AB is to motor conduit box
Eye bolts are removable
Size VU6 is supplied with windless-type control
See page 56 for VARIGEAR® configuration options.

Dimensions subject to change without notice.

VU

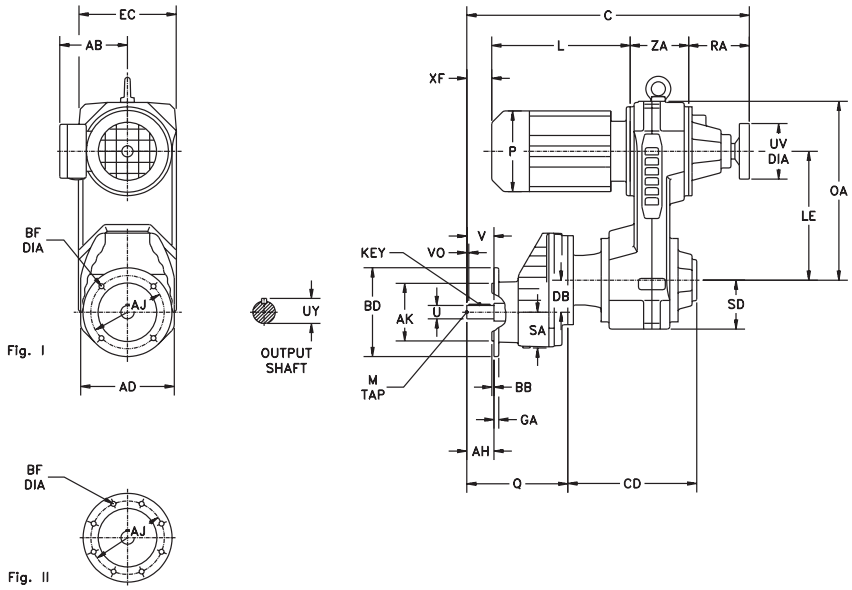

VZ

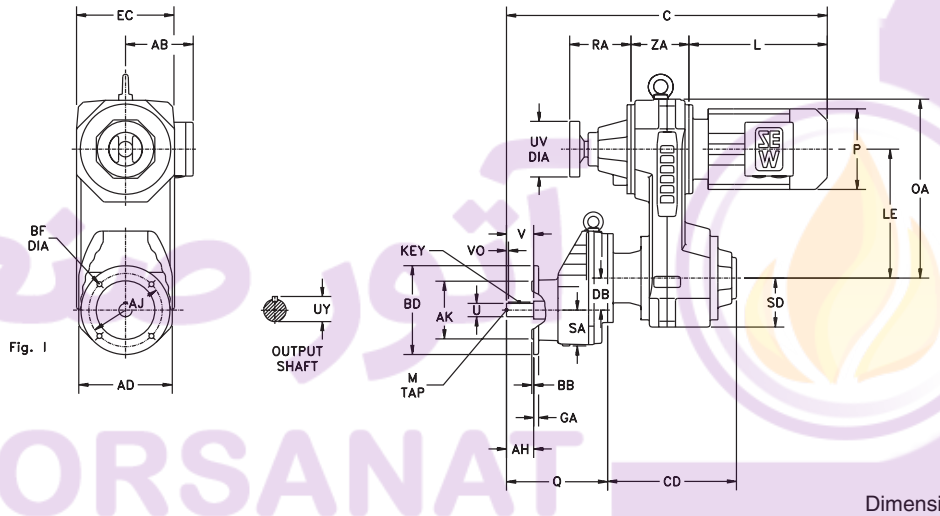

Dimensions are inch / mm

Gearcase				
Model	**AD**	**DB**	**Q**	**SA**
RXF107	14.57 370	5.12 130	14.33 364	5.31 135

Output Shaft						
Model	**U***	**UY**	**V**	**VO**	**Key**	**M**
RXF107	2.375 60	2.65 64	4.72 120	0.51 5	$\frac{5}{8} \times \frac{5}{8} \times 3\frac{5}{8}$ 18 x 11 x 110	$\frac{3}{4} - 10 \times 1.61$ M20 x 42

Flange									Specify BD dimension when ordering
Model		**AH**	**AJ**	**AK***	**BB**	**BD**	**BF**	**GA**
RXF107	**Fig. I**	4.72 120	11.81 300	9.843 250	0.20 5	13.78 350	0.69 17.5	0.93 23.5
	Fig. II	4.72 120	15.75 400	13.780 350	0.20 5	17.72 450	0.69 17.5	1.00 25.5

*** Note: See page 18 for tolerances.**

Dimensions subject to change without notice.

آتور صنعت ATOORSANAT
SEW EURODRIVE

VARIGEAR®							
Model	**EC**	**LE**	**OA**	**RA**	**SD**	**UV**	**ZA**
VU/VZ41	13.70 348	14.96 380	21.77 553	7.44 189	6.69 170	7.87 200	7.09 180
VU51	15.67 398	18.11 460	25.91 658	8.66 220	7.68 195	7.87 200	7.87 200

VARIGEAR® VU						
Model		**VU41**			**VU51**	
		DV132M	**DV132ML**	**DV160M**	**DV160L**	**DV180**
RXF107	**C**	36.46 926	36.46 926	36.46 926	39.76 1010	39.76 1010
	CD	15.00 381	15.00 381	15.00 381	17.24 438	17.24 438
	XF	6.10 155	3.74 95	3.74 95	3.43 87	0.59 15

VARIGEAR® VZ				
Model		**VZ41**		
		DV132M	**DV132ML**	**DV160M**
RXF107	**C**	38.94 989	41.30 1049	41.30 1049
	CD	15.00 381	15.00 381	15.00 381

Motor					
	VU/VZ41			**VU51**	
	DV132M	**DV132ML**	**DV160M**	**DV160L**	**DV180**
AB	9.13 232	9.13 232	9.13 232	10.04 255	10.55 268
L	15.83 402	18.19 462	18.19 462	19.80 503	22.64 575
P	10.83 275	10.83 275	10.83 275	13.03 331	13.03 331

Dimension AB is to motor conduit box
Eye bolts are removable
Size VU6 is supplied with windless-type control
See page 56 for VARIGEAR® configuration options.

آتور صنعت
ATOORSANAT

VU

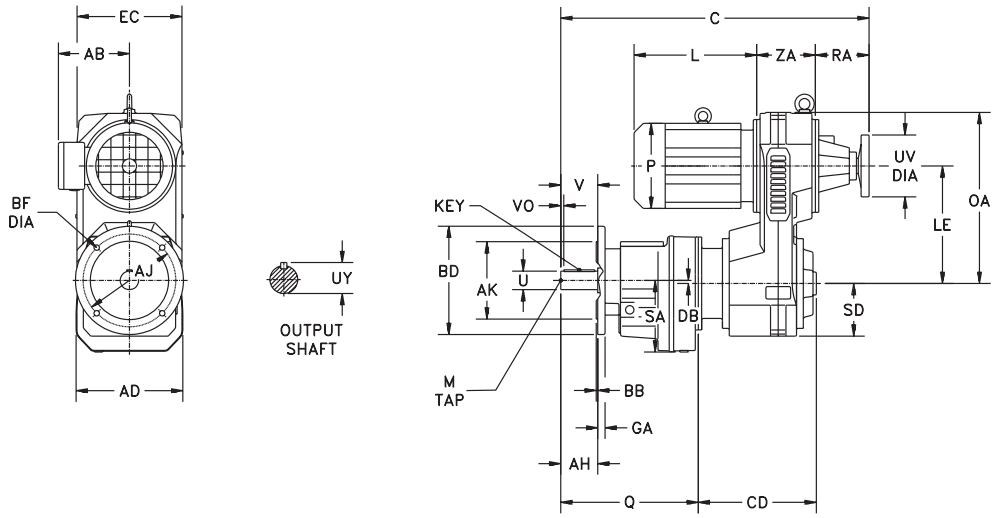

VZ

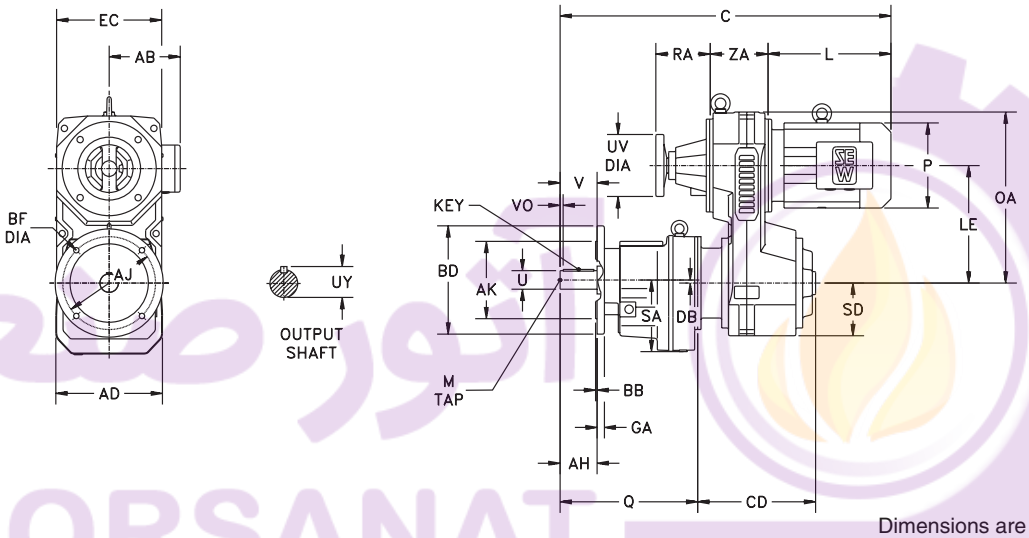

Dimensions are $\frac{\text{inch}}{\text{mm}}$

Gearcase				
Model	**AD**	**DB**	**Q**	**SA**
RF27	5.59 142	0.13 3.4	7.83 199	3.62 92

Output Shaft						
Model	**U***	**UY**	**V**	**VO**	**Key**	**M**
RF27	1.000 25	1.11 28	1.97 50	0.26 3.5	$\frac{1}{4} \times \frac{1}{4} \times 1\frac{5}{16}$ 8 x 7 x 40	$\frac{3}{8}$ – 16 × 0.87 M10 x 22

Flange								
						Specify BD dimension when ordering		
Model		**AH**	**AJ**	**AK***	**BB**	**BD**	**BF**	**GA**
RF27	**Option 1**	1.97 50	3.94 100	3.150 80	0.12 3	4.72 120	0.26 6.6	0.31 8
	Option 2	1.97 50	4.53 115	3.740 95	0.12 3	5.51 140	0.35 9	0.35 9
	Option 3	1.97 50	5.12 130	4.331 110	0.14 3.5	6.30 160	0.35 9	0.39 10

*** Note: See page 18 for tolerances.**

Dimensions subject to change without notice.

آتور صنعت ATOORSANAT
SEW EURODRIVE

VARIGEAR®							
Model	**EC**	**LE**	**OA**	**RA**	**SD**	**UV**	**ZA**
VU/VZ01	6.93 176	7.17 182	10.59 269	3.86 98	2.83 72	3.15 80	3.15 80

VARIGEAR® VU			
Model		**VU01**	
		DT71	**DT80**
RF27	**C**	19.33 491	19.33 491
	CD	8.39 213	8.39 213

VARIGEAR® VZ			
Model		**VZ01**	
		DT71	**DT80**
RF27	**C**	20.55 522	22.52 572
	CD	8.39 213	8.39 213

Motor		
	VU/VZ01	
	DT71	**DT80**
AB	5.43 138	5.43 138
L	7.95 202	9.92 252
P	5.71 145	5.71 145

Dimension AB is to motor conduit box
Eye bolts are removable
Size VU6 is supplied with windless-type control
See page 56 for VARIGEAR® configuration options.

آتور صنعت
ATOORSANAT

VU

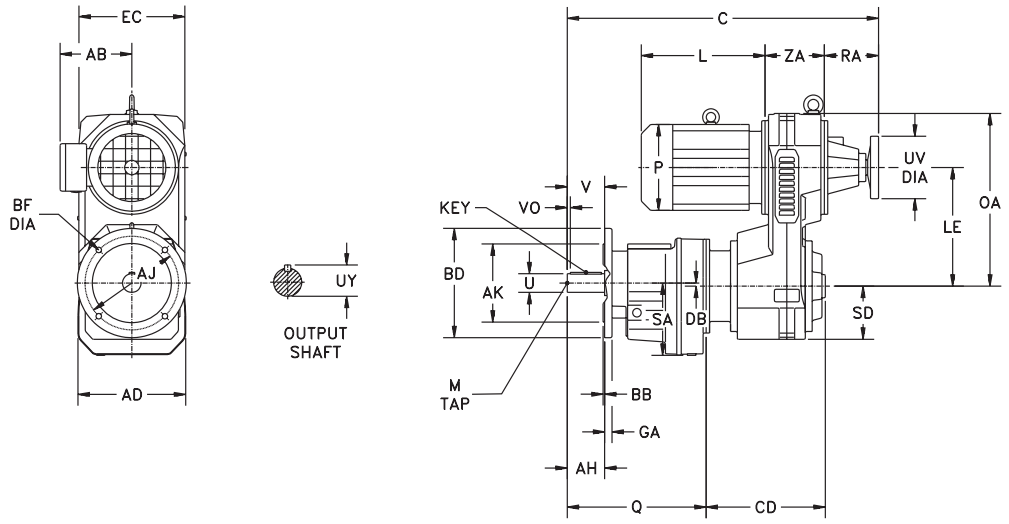

VZ

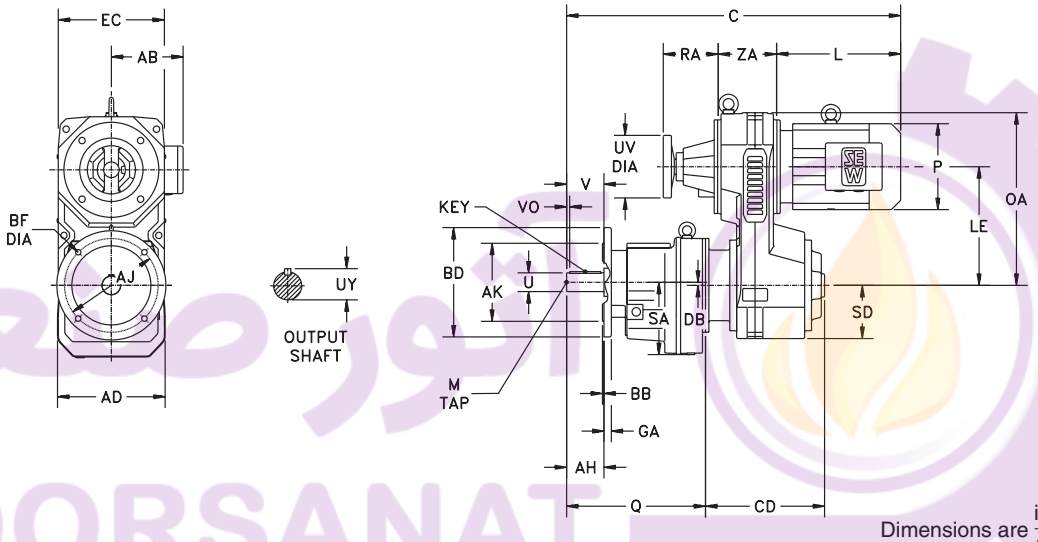

Dimensions are inch / mm

Gearcase					Output Shaft					
Model	**AD**	**DB**	**Q**	**SA**	**U***	**UY**	**V**	**VO**	**Key**	**M**
RF37	6.34 161	0.40 10.1	8.15 207	3.70 94	1.000 25	1.11 28	1.97 50	0.26 3.5	$\frac{1}{4} \times \frac{1}{4} \times 1\frac{5}{16}$ 8 x 7 x 40	$\frac{3}{8}$ – 16 × 0.87 M10 x 22
RF47	7.01 178	0.55 14	9.25 235	4.65 118	1.250 30	1.36 33	2.36 60	0.26 3.5	$\frac{1}{4} \times \frac{1}{4} \times 1\frac{11}{16}$ 8 x 7 x 50	$\frac{1}{2}$ – 13 × 1.12 M10 x 22

Flange								Specify BD dimension when ordering
Model		**AH**	**AJ**	**AK***	**BB**	**BD**	**BF**	**GA**
RF37	**Option 1**	1.97 50	3.94 100	3.150 80	0.12 3	4.72 120	0.26 6.6	0.39 10
	Option 2	1.97 50	5.12 130	4.331 110	0.14 3.5	6.30 160	0.35 9	0.39 10
	Option 3	1.97 50	6.50 165	5.118 130	0.14 3.5	7.87 200	0.43 11	0.47 12
RF47	**Option 1**	2.36 60	4.53 115	3.740 95	0.12 3	5.51 140	0.35 9	0.39 10
	Option 2	2.36 60	5.12 130	4.331 110	0.14 3.5	6.30 160	0.35 9	0.39 10
	Option 3	2.36 60	6.50 165	5.118 130	0.14 3.5	7.87 200	0.43 11	0.47 12

*** Note: See page 18 for tolerances.**

Dimensions subject to change without notice.

آتور صنعت ATOORSANAT
SEW EURODRIVE

VARIGEAR®							
Model	**EC**	**LE**	**OA**	**RA**	**SD**	**UV**	**ZA**
VU/VZ01	6.93 176	7.17 182	10.59 269	3.86 98	2.83 72	3.15 80	3.15 80
VU/VZ11	7.20 183	9.13 232	12.68 322	4.61 117	3.46 88	3.94 100	3.86 98
VU/VZ21	8.94 227	9.65 245	13.98 355	5.12 130	4.33 110	3.94 100	4.72 120

VARIGEAR® VU					
Model		**VU01**		**VU11**	**VU21**
		DT71	**DT80**	**DT90**	**DT100**
RF37	**C**	19.65 499	19.65 499	21.42 544	— —
	CD	8.39 213	8.39 213	9.37 238	— —
RF47	**C**	20.47 520	20.47 520	22.24 565	24.88 632
	CD	8.11 206	8.11 206	9.13 232	10.98 279

VARIGEAR® VZ					
Model		**VZ01**		**VZ11**	**VZ21**
		DT71	**DT80**	**DT90**	**DT100**
RF37	**C**	20.87 530	22.83 580	24.80 630	— —
	CD	8.39 213	8.39 213	9.37 238	— —
RF47	**C**	21.69 551	23.66 601	25.63 651	28.46 723
	CD	8.11 206	8.11 206	9.13 232	10.98 279

Motor				
	VU/VZ01		**VU/VZ11**	**VU/VZ21**
	DT71	**DT80**	**DT90**	**DT100**
AB	5.43 138	5.43 138	6.73 171	6.89 175
L	7.95 202	9.92 252	10.75 273	12.24 311
P	5.71 145	5.71 145	7.76 197	7.76 197

Dimension AB is to motor conduit box
Eye bolts are removable
Size VU6 is supplied with windless-type control
See page 56 for VARIGEAR® configuration options.

ATOORSANAT آتور صنعت

VU

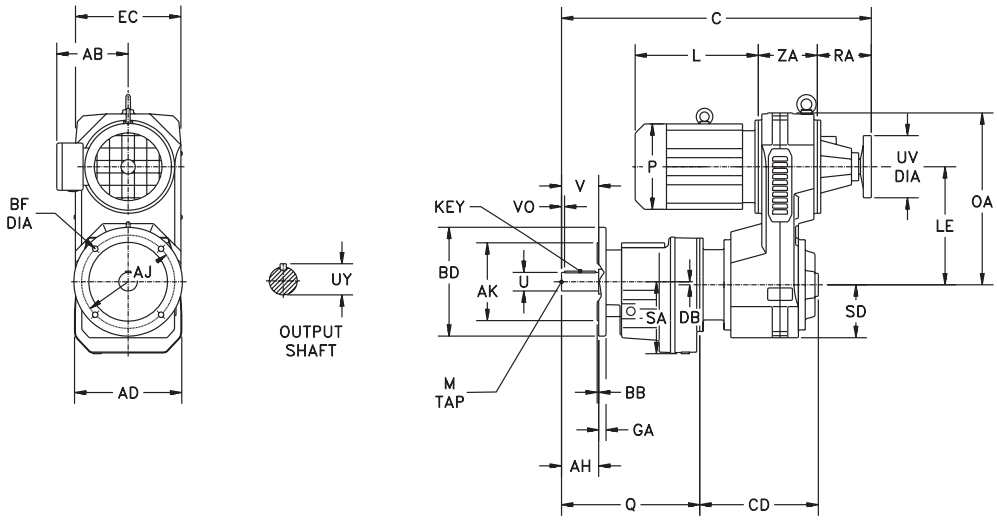

VZ

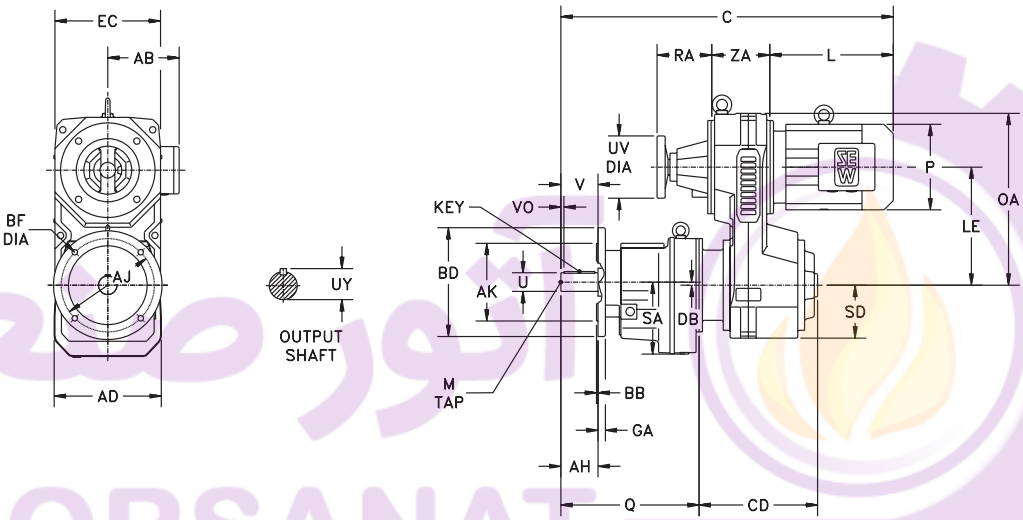

Dimensions are $\frac{\text{inch}}{\text{mm}}$

Gearcase					Output Shaft					
Model	**AD**	**DB**	**Q**	**SA**	**U***	**UY**	**V**	**VO**	**Key**	**M**
RF57	7.95 202	0.44 11.2	10.12 257	4.76 121	1.375 35	1.51 38	2.76 70	0.43 7	$\frac{5}{16} \times \frac{5}{16} \times 1\frac{13}{16}$ 10 x 8 x 56	$\frac{1}{2} - 13 \times 1.12$ M12 x 28
RF67	8.46 215	0.81 20.7	11.02 280	5.28 134	1.375 35	1.51 38	2.76 70	0.43 7	$\frac{5}{16} \times \frac{5}{16} \times 1\frac{13}{16}$ 10 x 8 x 56	$\frac{1}{2} - 13 \times 1.12$ M12 x 28

Flange								Specify BD dimension when ordering
Model		**AH**	**AJ**	**AK***	**BB**	**BD**	**BF**	**GA**
RF57	**Option 1**	2.76 70	5.12 130	4.331 110	0.14 3.5	6.30 160	0.35 9	0.39 10
	Option 2	2.76 70	6.50 165	5.118 130	0.14 3.5	7.87 200	0.43 11	0.47 12
	Option 3	2.76 70	8.46 215	7.087 180	0.16 4	9.84 250	0.53 13.5	0.59 15
RF67	**Option 1**	2.76 70	8.46 215	7.087 180	0.16 4	9.84 250	0.53 13.5	0.73 18.5
	Option 2	2.76 70	6.50 165	5.118 130	0.14 3.5	7.87 200	0.43 11	0.47 12

*** Note: See page 18 for tolerances.**

Dimensions subject to change without notice.

آتور صنعت ATOORSANAT SEW EURODRIVE

VARIGEAR®							
Model	**EC**	**LE**	**OA**	**RA**	**SD**	**UV**	**ZA**
VU/VZ01	6.93 176	7.17 182	10.59 269	3.86 98	2.83 72	3.15 80	3.15 80
VU/VZ11	7.20 183	9.13 232	12.68 322	4.61 117	3.46 88	3.94 100	3.86 98
VU/VZ21	8.94 227	9.65 245	13.98 355	5.12 130	4.33 110	3.94 100	4.72 120
VU/VZ31	11.14 283	12.01 305	17.52 445	5.91 150	5.43 138	4.92 125	5.98 152

VARIGEAR® VU								
Model		**VU01**		**VU11**	**VU21**	**VU31**		
		DT71	**DT80**	**DT90**	**DT100**	**DT100**	**DV112M**	**DV132S**
RF57	**C**	21.34 542	21.34 542	23.11 587	25.75 654	28.78 731	28.78 731	28.78 731
	CD	8.11 206	8.11 206	9.13 232	10.98 279	13.03 331	13.03 331	13.03 331
RF67	**C**	22.24 565	22.24 565	24.02 610	26.65 677	29.69 754	29.69 754	29.69 754
	CD	8.11 206	8.11 206	9.13 232	10.98 279	13.03 331	13.03 331	13.03 331

VARIGEAR® VZ								
Model		**VZ01**		**VZ11**	**VZ21**	**VZ31**		
		DT71	**DT80**	**DT90**	**DT100**	**DT100**	**DV112M**	**DV132S**
RF57	**C**	22.56 573	24.53 623	26.50 673	29.33 745	30.67 779	32.17 817	33.94 862
	CD	8.11 206	8.11 206	9.13 232	10.98 279	13.03 331	13.03 331	13.03 331
RF67	**C**	23.46 596	25.43 646	27.40 696	30.24 768	31.57 802	33.07 840	34.84 885
	CD	8.11 206	8.11 206	9.13 232	10.98 279	13.03 331	13.03 331	13.03 331

Motor							
	VU/VZ01		**VU/VZ11**	**VU/VZ21**	**VU/VZ31**		
	DT71	**DT80**	**DT90**	**DT100**	**DT100**	**DV112M**	**DV132S**
AB	5.43 138	5.43 138	6.73 171	6.89 175	6.89 175	7.40 188	7.40 188
L	7.95 202	9.92 252	10.75 273	12.24 311	12.24 311	13.74 349	15.51 394
P	5.71 145	5.71 145	7.76 197	7.76 197	7.76 197	8.70 221	8.70 221

Dimension AB is to motor conduit box
Eye bolts are removable
Size VU6 is supplied with windless-type control
See page 56 for VARIGEAR® configuration options.

آتور صنعت
ATOORSANAT

VU

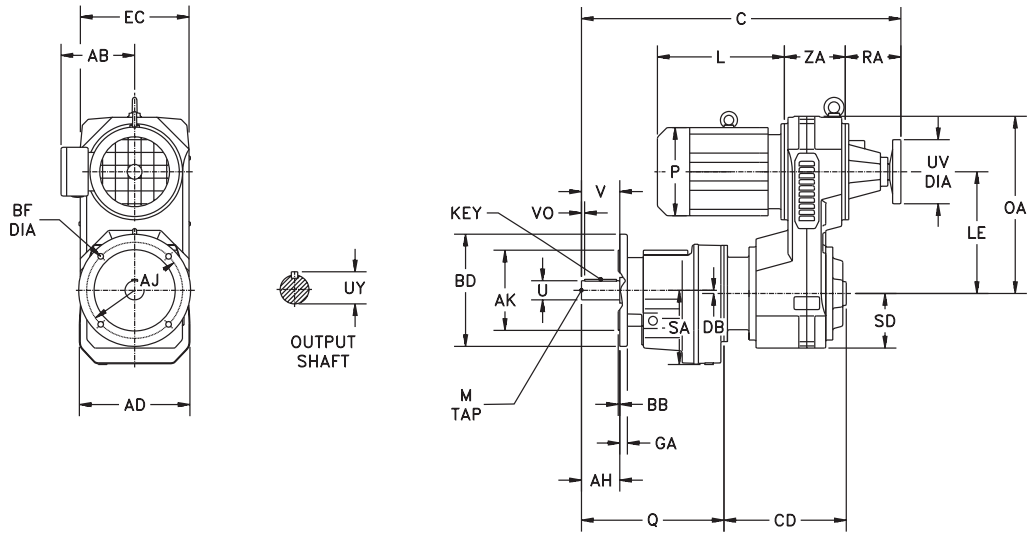

VZ

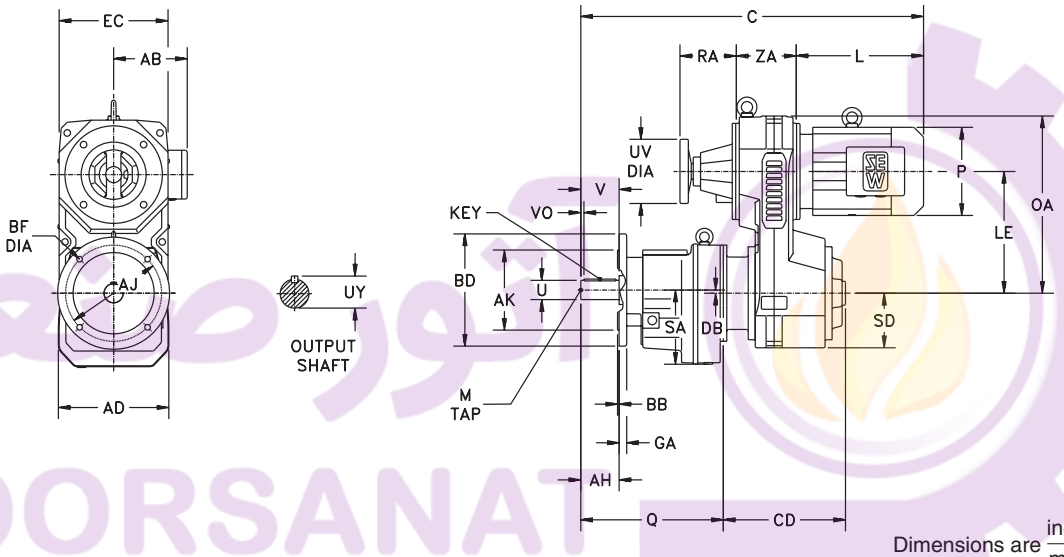

Dimensions are inch / mm

Gearcase					Output Shaft					
Model	**AD**	**DB**	**Q**	**SA**	**U***	**UY**	**V**	**VO**	**Key**	**M**
RF77	9.25 235	0.63 15.9	11.81 300	5.67 144	1.625 40	1.79 43	3.15 80	0.38 5	3/8 × 3/8 × 2 1/4 12 x 8 x 70	5/8 – 11 × 1.38 M16 x 36
RF87	11.69 297	0.50 12.6	14.65 372	7.24 184	2.125 50	2.35 53.5	3.94 100	0.64 10	1/2 × 1/2 × 2 5/8 14 x 9 x 80	3/4 – 10 × 1.61 M16 x 36

Flange								Specify BD dimension when ordering
Model		**AH**	**AJ**	**AK***	**BB**	**BD**	**BF**	**GA**
RF77	**Option 1**	3.15 80	10.43 265	9.055 230	0.16 4	11.81 300	0.53 13.5	0.73 18.5
	Option 2	3.15 80	8.46 215	7.087 180	0.16 4	9.84 250	0.53 13.5	0.73 18.5
RF87	**Option 1**	3.94 100	11.81 300	9.843 250	0.20 5	13.78 350	0.69 17.5	0.83 21
	Option 2	3.94 100	10.43 265	9.055 230	0.16 4	11.81 300	0.53 13.5	0.77 19.5

*** Note: See page 18 for tolerances.**

Dimensions subject to change without notice.

آتور صنعت ATOORSANAT
SEW EURODRIVE

VARIGEAR®							
Model	**EC**	**LE**	**OA**	**RA**	**SD**	**UV**	**ZA**
VU/VZ11	7.20 183	9.13 232	12.68 322	4.61 117	3.46 88	3.94 100	3.86 98
VU/VZ21	8.94 227	9.65 245	13.98 355	5.12 130	4.33 110	3.94 100	4.72 120
VU/VZ31	11.14 283	12.01 305	17.52 445	5.91 150	5.43 138	4.92 125	5.98 152
VU/VZ41	13.70 348	14.96 380	21.77 553	7.44 189	6.69 170	7.87 200	7.09 180
VU51	15.67 398	18.11 460	25.91 658	8.66 220	7.68 195	7.87 200	7.87 200

VARIGEAR® VU											
Model		**VU11**	**VU21**	**VU31**			**VU41**			**VU51**	
		DT90	**DT100**	**DT100**	**DV112M**	**DV132S**	**DV132M**	**DV132ML**	**DV160M**	**DV160L**	**DV180**
RF77	**C**	24.57 624	27.13 689	30.12 765	30.12 765	30.12 765	34.57 878	34.57 878	34.57 878	— —	— —
	CD	8.90 226	10.67 271	12.68 322	12.68 322	12.68 322	15.63 397	15.63 397	15.63 397	— —	— —
RF87	**C**	— —	29.80 757	32.76 832	32.76 832	32.76 832	37.20 945	37.20 945	37.20 945	40.51 1029	40.51 1029
	CD	— —	10.51 267	12.48 317	12.48 317	12.48 317	15.43 392	15.43 392	15.43 392	17.68 449	17.68 449

VARIGEAR® VZ									
Model		**VZ11**	**VZ21**	**VZ31**			**VZ41**		
		DT90	**DT100**	**DT100**	**DV112M**	**DV132S**	**DV132M**	**DV132ML**	**DV160M**
RF77	**C**	27.95 710	30.71 780	32.01 813	33.50 851	35.28 896	37.05 941	39.41 1001	39.41 1001
	CD	8.90 226	10.67 271	12.68 322	12.68 322	12.68 322	15.63 397	15.63 397	15.63 397
RF87	**C**	— —	33.39 848	34.65 880	36.14 918	37.91 963	39.69 1008	42.05 1068	42.05 1068
	CD	— —	10.51 267	12.48 317	12.48 317	12.48 317	15.43 392	15.43 392	15.43 392

Motor										
	VU/VZ11	**VU/VZ21**	**VU/VZ31**			**VU/VZ41**			**VU51**	
	DT90	**DT100**	**DT100**	**DV112M**	**DV132S**	**DV132M**	**DV132ML**	**DV160M**	**DV160L**	**DV180**
AB	6.73 171	6.89 175	6.89 175	7.40 188	7.40 188	9.13 232	9.13 232	9.13 232	10.04 255	10.55 268
L	10.75 273	12.24 311	12.24 311	13.74 349	15.51 394	15.83 402	18.19 462	18.19 462	19.80 503	22.64 575
P	7.76 197	7.76 197	7.76 197	8.70 221	8.70 221	10.83 275	10.83 275	10.83 275	13.03 331	13.03 331

Dimension AB is to motor conduit box
Eye bolts are removable
Size VU6 is supplied with windless-type control
See page 56 for VARIGEAR® configuration options.

VU

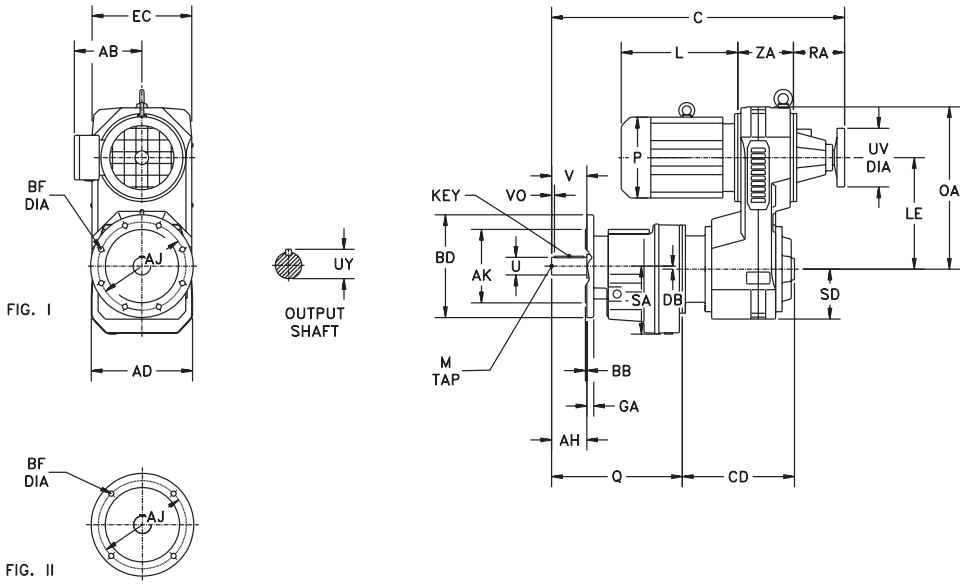

VZ

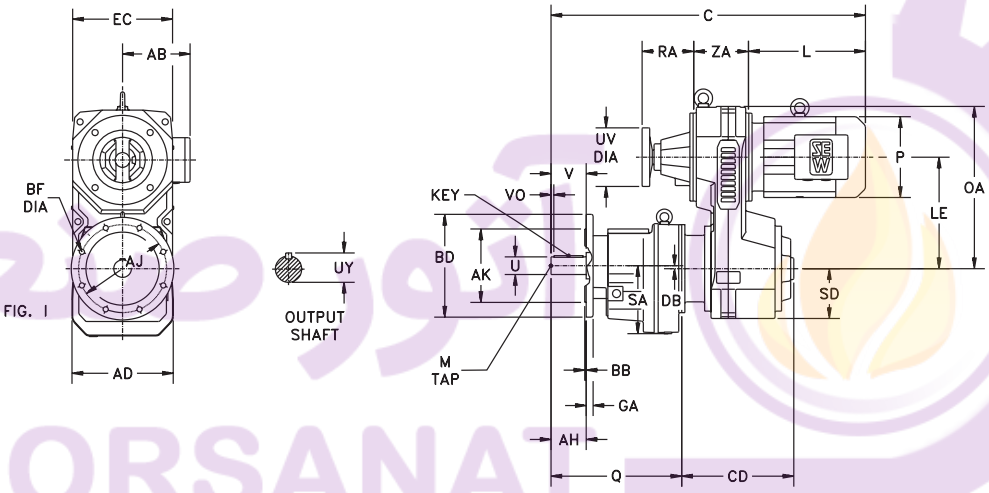

Dimensions are inch / mm

Gearcase					Output Shaft					
Model	**AD**	**DB**	**Q**	**SA**	**U***	**UY**	**V**	**VO**	**Key**	**M**
RF97	13.70 348	0.40 10.2	17.32 440	9.06 230	2.375 60	2.65 64	4.72 120	0.51 5	5/8 × 5/8 × 3 5/8 18 x 11 x 110	3/4 – 10 × 1.61 M20 x 42
RF107	16.10 409	0.80 20.4	19.49 495	10.04 255	2.875 70	3.20 74.5	5.51 140	0.67 7.5	3/4 × 3/4 × 4 1/8 20 x 12 x 125	3/4 – 10 × 1.61 M20 x 42

Flange								Specify BD dimension when ordering
Model		**AH**	**AJ**	**AK***	**BB**	**BD**	**BF**	**GA**
RF97	**Fig. I**	4.72 120	15.75 400	13.780 350	0.20 5	17.72 450	0.69 17.5	1.00 25.5
	Fig. II	4.72 120	11.81 300	9.843 250	0.20 5	13.78 350	0.69 17.5	0.93 23.5
RF107	**Fig. I**	5.51 140	15.75 400	13.780 350	0.20 5	17.72 450	0.69 17.5	0.93 23.5
	Fig. II	5.51 140	11.81 300	9.843 250	0.20 5	13.78 350	0.69 17.5	0.79 20

*** Note: See page 18 for tolerances.**

Dimensions subject to change without notice.

آتور صنعت ATOORSANAT SEW EURODRIVE

VARIGEAR®							
Model	**EC**	**LE**	**OA**	**RA**	**SD**	**UV**	**ZA**
VU/VZ31	11.14 283	12.01 305	17.52 445	5.91 150	5.43 138	4.92 125	5.98 152
VU/VZ41	13.70 348	14.96 380	21.77 553	7.44 189	6.69 170	7.87 200	7.09 180
VU51	15.67 398	18.11 460	25.91 658	8.66 220	7.68 195	7.87 200	7.87 200
VU6	18.94 481	22.60 574	31.69 805	6.10 155	9.65 245	15.16 385	8.43 214

VARIGEAR® VU												
Model		**VU31**			**VU41**			**VU51**		**VU6**		
		DT100	**DV112M**	**DV132S**	**DV132M**	**DV132ML**	**DV160M**	**DV160L**	**DV180**	**DV180**	**DV200**	**DV225**
RF97	**C**	35.24 895	35.24 895	35.24 895	39.69 1008	39.69 1008	39.69 1008	42.99 1092	42.99 1092	— —	— —	— —
	CD	12.28 312	12.28 312	12.28 312	15.24 387	15.24 387	15.24 387	17.48 444	17.48 444	— —	— —	— —
RF107	**C**	— —	— —	— —	41.61 1057	41.61 1057	41.61 1057	44.92 1141	44.92 1141	47.24 1200	47.24 1200	47.24 1200
	CD	— —	— —	— —	15.00 381	15.00 381	15.00 381	17.24 438	17.24 438	26.06 662	26.06 662	26.06 662

VARIGEAR® VZ							
Model		**VZ31**			**VZ41**		
		DT100	**DV112M**	**DV132S**	**DV132M**	**DV132ML**	**DV160M**
RF97	**C**	37.13 943	38.62 981	40.39 1026	42.17 1071	44.53 1131	44.53 1131
	CD	12.28 312	12.28 312	12.28 312	15.24 387	15.24 387	15.24 387
RF107	**C**	— —	— —	— —	44.09 1120	46.46 1180	46.46 1180
	CD	— —	— —	— —	15.00 381	15.00 381	15.00 381

Motor											
	VU/VZ31			**VU/VZ41**			**VU51**		**VU6**		
	DT100	**DV112M**	**DV132S**	**DV132M**	**DV132ML**	**DV160M**	**DV160L**	**DV180**	**DV180**	**DV200**	**DV225**
AB	6.89 175	7.40 188	7.40 188	9.13 232	9.13 232	9.13 232	10.04 255	10.55 268	10.55 268	11.81 300	11.97 304
L	12.24 311	13.74 349	15.51 394	15.83 402	18.19 462	18.19 462	19.80 503	22.64 575	22.64 575	24.53 623	28.54 725
P	7.76 197	8.70 221	8.70 221	10.83 275	10.83 275	10.83 275	13.03 331	13.03 331	13.03 331	15.51 394	15.51 394

Dimension AB is to motor conduit box
Eye bolts are removable
Size VU6 is supplied with windless-type control
See page 56 for VARIGEAR® configuration options.

آتور صنعت
ATOORSANAT

VU

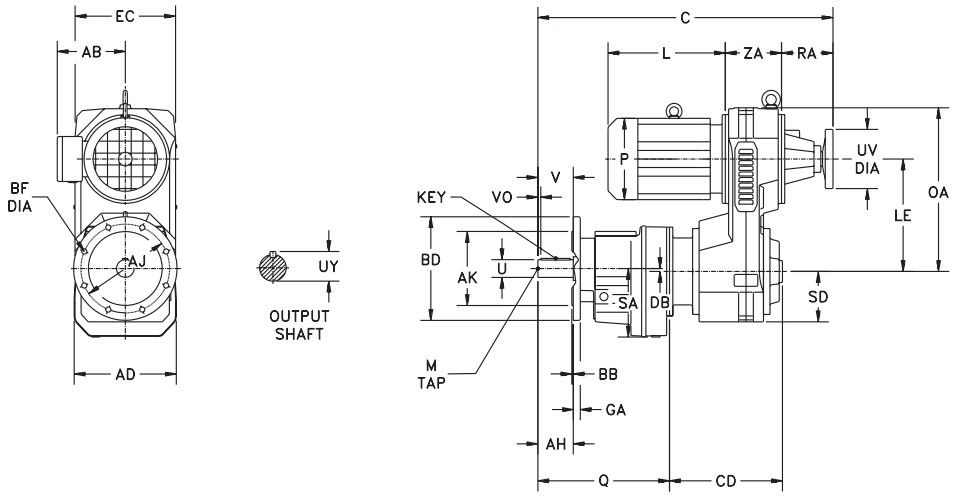

VZ

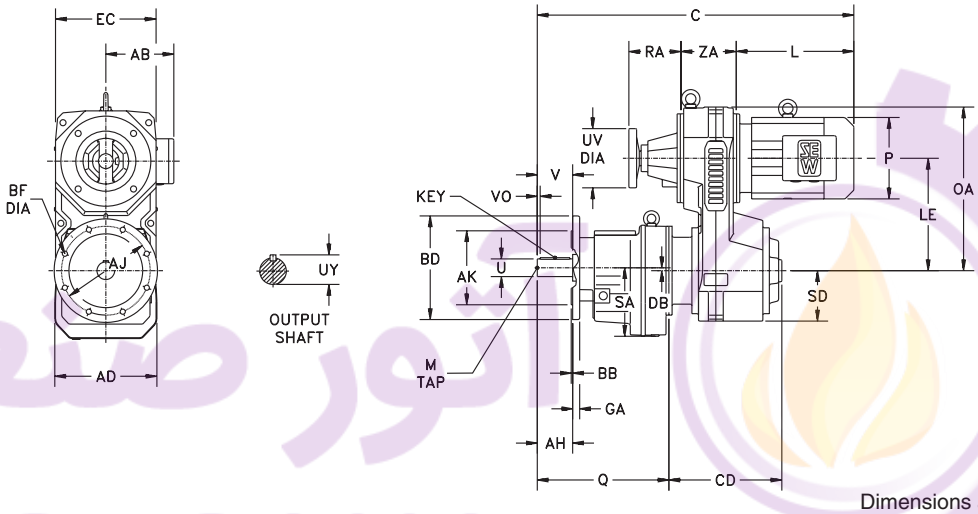

Dimensions are inch / mm

Gearcase					Output Shaft					
Model	**AD**	**DB**	**Q**	**SA**	**U***	**UY**	**V**	**VO**	**Key**	**M**
RF137	18.03 458	0.99 25.1	23.19 589	12.60 320	3.625 90	4.01 95	6.69 170	0.63 5	7/8 × 7/8 × 5 3/8 25 x 14 x 160	1– 8 × 2.13 M24 x 50
RF147	21.26 540	1.31 33.4	27.36 695	14.21 361	4.375 110	4.82 116	8.27 210	1.09 15	1× 1× 6 28 x 16 x 180	1– 8 × 2.13 M24 x 50
RF167	26.38 670	2.36 59.9	31.10 790	16.93 430	4.750 120	5.29 127	8.27 210	0.82 5	1 1/4 × 1 1/4 × 6 9/16 32 x 18 x 200	1– 8 × 2.13 M24 x 50

Flange								Specify BD dimension when ordering
Model		**AH**	**AJ**	**AK***	**BB**	**BD**	**BF**	**GA**
RF137	**Option 1**	6.69 170	19.69 500	17.717 450	0.20 5	21.65 550	0.69 17.5	1.10 28
	Option 2	6.69 170	15.75 400	13.780 350	0.20 5	17.72 450	0.69 17.5	1.10 28
RF147	**Option 1**	8.27 210	19.69 500	17.717 450	0.20 5	21.65 550	0.69 17.5	1.22 31
	Option 2	8.27 210	15.75 400	13.780 350	0.20 5	17.72 450	0.69 17.5	1.22 31
RF167	**Option 1**	8.27 210	23.62 600	21.654 550	0.24 6	25.98 660	0.87 22	1.26 32
	Option 2	8.27 210	19.69 500	17.717 450	0.20 5	21.65 550	0.69 17.5	1.26 32

*** Note: See page 18 for tolerances.**

Dimensions subject to change without notice.

آتور صنعت ATOORSANAT
SEW EURODRIVE

VARIGEAR®							
Model	**EC**	**LE**	**OA**	**RA**	**SD**	**UV**	**ZA**
VU51	15.67 398	18.11 460	25.91 658	8.66 220	7.68 195	7.87 200	7.87 200
VU6	18.94 481	22.60 574	31.69 805	6.10 155	9.65 245	15.16 385	8.43 214

VARIGEAR® VU						
Model		**VU51**		**VU6**		
		DV160L	**DV180**	**DV180**	**DV200**	**DV225**
RF137	**C**	48.35 1228	48.35 1228	50.67 1287	50.67 1287	50.67 1287
	CD	16.97 431	16.97 431	25.79 655	25.79 655	25.79 655
RF147	**C**	52.20 1326	52.20 1326	54.53 1385	54.53 1385	54.53 1385
	CD	16.65 423	16.65 423	25.47 647	25.47 647	25.47 647
RF167	**C**	— —	— —	59.25 1505	59.25 1505	59.25 1505
	CD	— —	— —	25.16 639	25.16 639	25.16 639

Motor					
	VU51		**VU6**		
	DV160L	**DV180**	**DV180**	**DV200**	**DV225**
AB	10.04 255	10.55 268	10.55 268	11.81 300	11.97 304
L	19.80 503	22.64 575	22.64 575	24.53 623	28.54 725
P	13.03 331	13.03 331	13.03 331	15.51 394	15.51 394

Dimension AB is to motor conduit box
Eye bolts are removable
Size VU6 is supplied with windless-type control
See page 56 for VARIGEAR® configuration options.

آتور صنعت
ATOORSANAT

VU

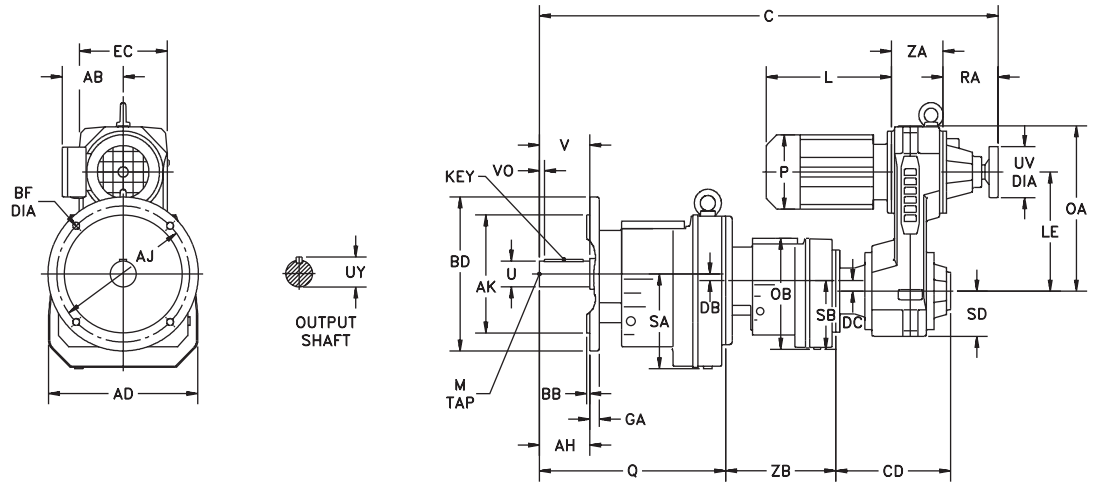

VZ

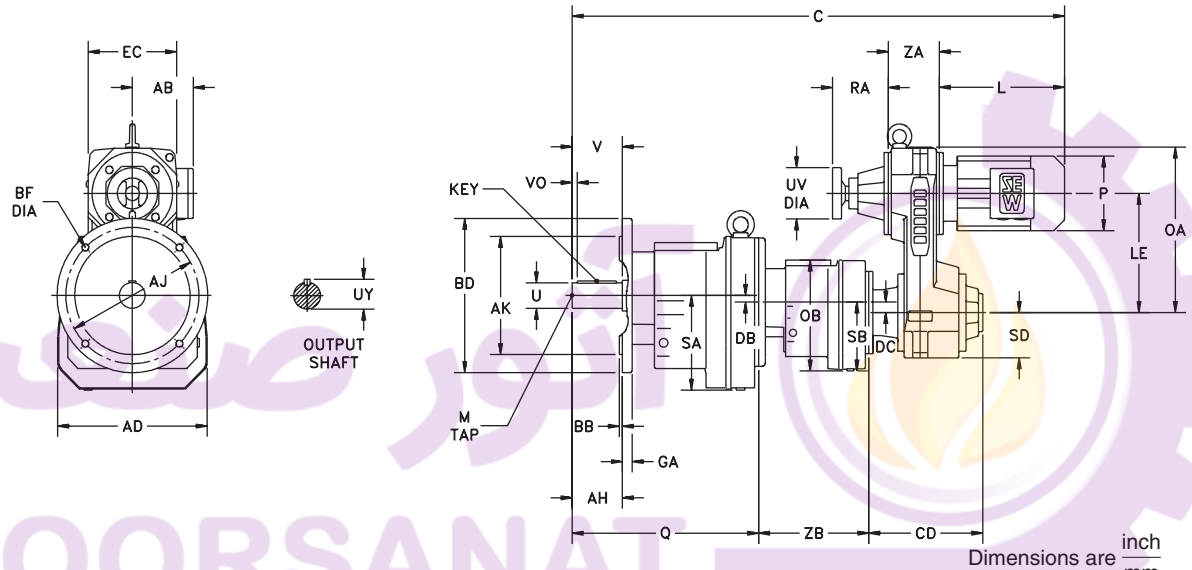

Dimensions are inch / mm

Gearcase							
Model	**AD**	**DB**	**DC**	**Q**	**SA**	**SB**	**ZB**
RF47R37	7.01 178	0.55 14	0.40 10.1	9.25 235	4.65 118	3.70 94	6.50 165

Output Shaft						
Model	**U***	**UY**	**V**	**VO**	**Key**	**M**
RF47R37	1.250 30	1.36 33	2.36 60	0.26 3.5	$\frac{1}{4} \times \frac{1}{4} \times 1\frac{11}{16}$ 8 x 7 x 50	$\frac{1}{2}$ – 13 × 1.12 M10 x 22

Flange								Specify BD dimension when ordering
Model		**AH**	**AJ**	**AK***	**BB**	**BD**	**BF**	**GA**
RF47R37	**Option 1**	2.36 60	4.53 115	3.740 95	0.12 3	5.51 140	0.35 9	0.39 10
	Option 2	2.36 60	5.12 130	4.331 110	0.14 3.5	6.30 160	0.35 9	0.39 10
	Option 3	2.36 60	6.50 165	5.118 130	0.14 3.5	7.87 200	0.43 11	0.47 12

*** Note: See page 18 for tolerances.**

Dimensions subject to change without notice.

آتور صنعت ATOORSANAT
SEW EURODRIVE

VARIGEAR®							
Model	**EC**	**LE**	**OA**	**RA**	**SD**	**UV**	**ZA**
VU/VZ01	6.93 176	7.17 182	10.59 269	3.86 98	2.83 72	3.15 80	3.15 80
VU/VZ11	7.20 183	9.13 232	12.68 322	4.61 117	3.46 88	3.94 100	3.86 98

VARIGEAR® VU				
Model		**VU01**		**VU11**
		DT71	**DT80**	**DT90**
RF47R37	**C**	27.24 692	27.24 692	29.02 737
	CD	8.39 213	8.39 213	9.37 238

VARIGEAR® VZ				
Model		**VZ01**		**VZ11**
		DT71	**DT80**	**DT90**
RF47R37	**C**	28.46 723	30.43 773	32.40 823
	CD	8.39 213	8.39 213	9.37 238

Motor			
	VU/VZ01		**VU/VZ11**
	DT71	**DT80**	**DT90**
AB	5.43 138	5.43 138	6.73 171
L	7.95 202	9.92 252	10.75 273
P	5.71 145	5.71 145	7.76 197

Dimension AB is to motor conduit box
Eye bolts are removable
Size VU6 is supplied with windless-type control
See page 56 for VARIGEAR® configuration options.

آتور صنعت
ATOORSANAT

VU

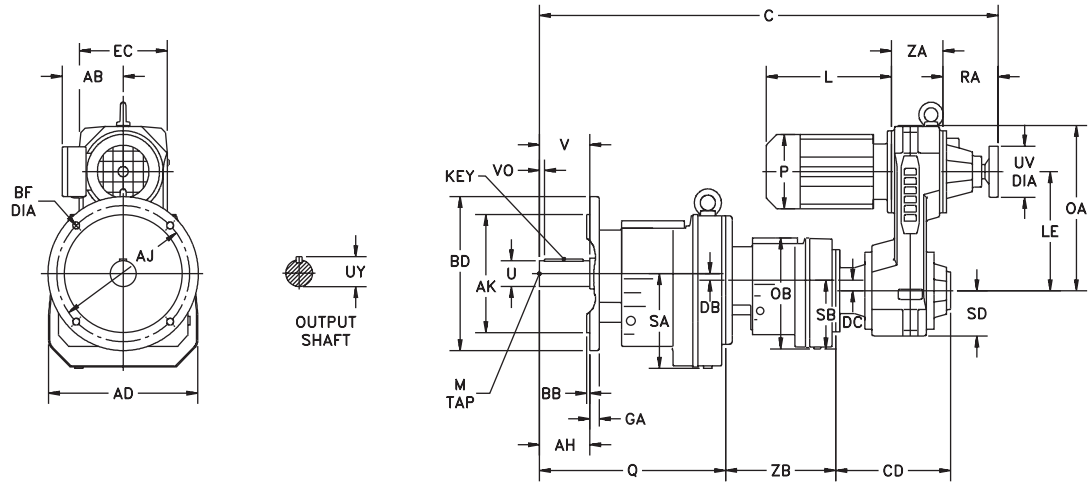

VZ

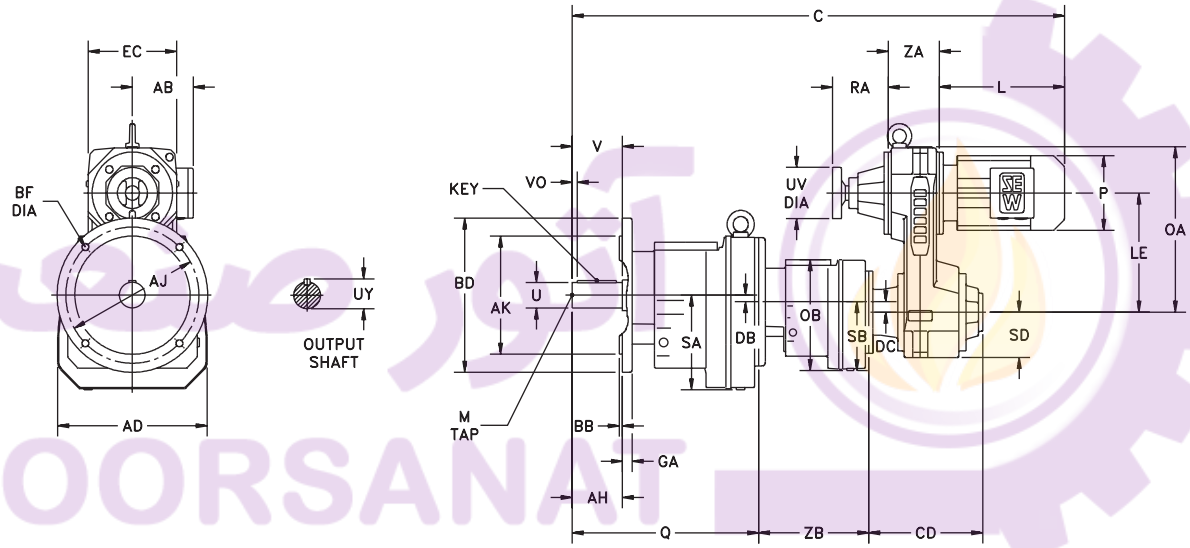

آتور صنعت
ATOORSANAT

Dimensions are inch / mm

Gearcase							
Model	**AD**	**DB**	**DC**	**Q**	**SA**	**SB**	**ZB**
RF57R37	7.95 202	0.44 11.2	0.40 10.1	10.12 257	4.76 121	3.70 94	6.50 165
RF67R37	8.46 215	0.81 20.7	0.40 10.1	11.02 280	5.28 134	3.70 94	6.50 165

Output Shaft						
Model	**U***	**UY**	**V**	**VO**	**Key**	**M**
RF57R37	1.375 35	1.51 38	2.76 70	0.43 7	$\frac{5}{16} \times \frac{5}{16} \times 1\frac{13}{16}$ 10 x 8 x 56	$\frac{1}{2} - 13 \times 1.12$ M12 x 28
RF67R37	1.375 35	1.51 38	2.76 70	0.43 7	$\frac{5}{16} \times \frac{5}{16} \times 1\frac{13}{16}$ 10 x 8 x 56	$\frac{1}{2} - 13 \times 1.12$ M12 x 28

*** Note: See page 18 for tolerances.**

Dimensions subject to change without notice.

آتور صنعت ATOORSANAT
SEW EURODRIVE

Flange								Specify BD dimension when ordering
Model		**AH**	**AJ**	**AK***	**BB**	**BD**	**BF**	**GA**
RF57R37	**Option 1**	2.76 70	5.12 130	4.331 110	0.14 3.5	6.30 160	0.35 9	0.39 10
	Option 2	2.76 70	6.50 165	5.118 130	0.14 3.5	7.87 200	0.43 11	0.47 12
	Option 3	2.76 70	8.46 215	7.087 180	0.16 4	9.84 250	0.53 13.5	0.59 15
RF67R37	**Option 1**	2.76 70	8.46 215	7.087 180	0.16 4	9.84 250	0.53 13.5	0.73 18.5
	Option 2	2.76 70	6.50 165	5.118 130	0.14 3.5	7.87 200	0.43 11	0.47 12

*** Note: See page 18 for tolerances.**

VARIGEAR®							
Model	**EC**	**LE**	**OA**	**RA**	**SD**	**UV**	**ZA**
VU/VZ01	6.93 176	7.17 182	10.59 269	3.86 98	2.83 72	3.15 80	3.15 80
VU/VZ11	7.20 183	9.13 232	12.68 322	4.61 117	3.46 88	3.94 100	3.86 98

VARIGEAR® VU				
Model		**VU01**		**VU11**
		DT71	**DT80**	**DT90**
RF57R37	**C**	28.11 714	28.11 714	29.88 759
	CD	8.39 213	8.39 213	9.37 238
RF67R37	**C**	29.02 737	29.02 737	30.79 782
	CD	8.39 213	8.39 213	9.37 238

VARIGEAR® VZ				
Model		**VZ01**		**VZ11**
		DT71	**DT80**	**DT90**
RF57R37	**C**	29.33 745	31.30 795	33.27 845
	CD	8.39 213	8.39 213	9.37 238
RF67R37	**C**	30.24 768	32.20 818	34.17 868
	CD	8.39 213	8.39 213	9.37 238

Motor			
	VU/VZ01		**VU/VZ11**
	DT71	**DT80**	**DT90**
AB	5.43 138	5.43 138	6.73 171
L	7.95 202	9.92 252	10.75 273
P	5.71 145	5.71 145	7.76 197

Dimension AB is to motor conduit box
Size VU6 is supplied with windless-type control

Eye bolts are removable
See page 56 for VARIGEAR® configuration options.

Dimensions subject to change without notice.

VU

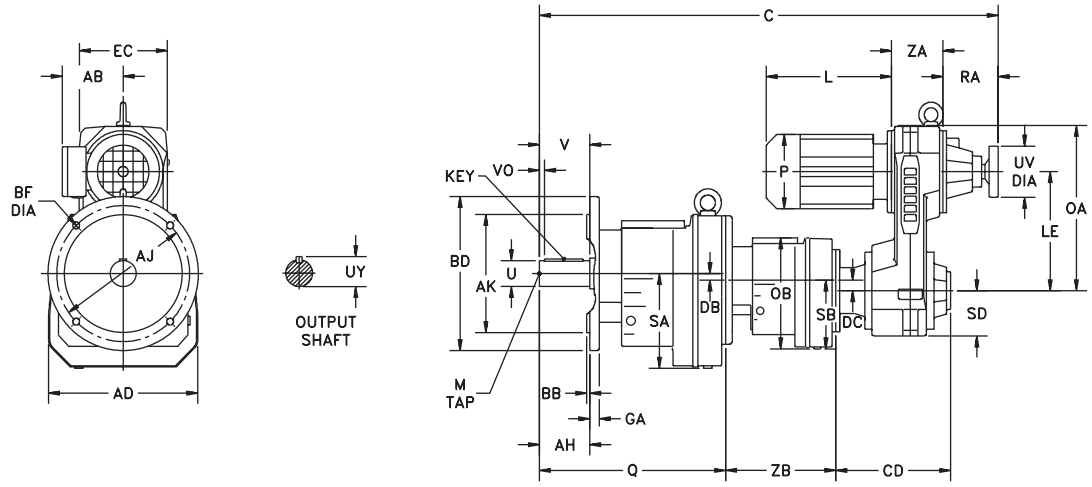

VZ

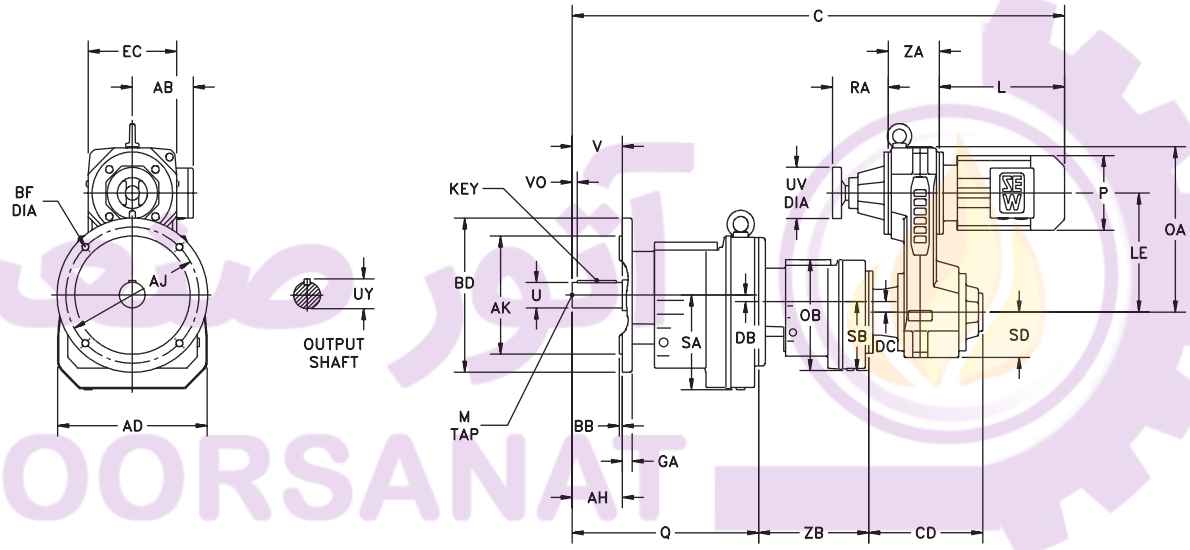

آتور صنعت
ATOORSANAT

Dimensions are $\frac{\text{inch}}{\text{mm}}$

Gearcase							
Model	**AD**	**DB**	**DC**	**Q**	**SA**	**SB**	**ZB**
RF77R37	9.25 235	0.63 15.9	0.40 10.1	11.81 300	5.67 144	3.70 94	6.18 157
RF87R57	11.69 297	0.50 12.6	0.44 11.2	14.65 372	7.24 184	4.76 121	8.50 216

Output Shaft						
Model	**U***	**UY**	**V**	**VO**	**Key**	**M**
RF77R37	1.625 40	1.79 43	3.15 80	0.38 5	$\frac{3}{8} \times \frac{3}{8} \times 2\frac{1}{4}$ 12 x 8 x 70	$\frac{5}{8} - 11 \times 1.38$ M16 x 36
RF87R57	2.125 50	2.35 53.5	3.94 100	0.64 10	$\frac{1}{2} \times \frac{1}{2} \times 2\frac{5}{8}$ 14 x 9 x 80	$\frac{3}{4} - 10 \times 1.61$ M16 x 36

*** Note: See page 18 for tolerances.**

Dimensions subject to change without notice.

آتور صنعت ATOORSANAT
SEW EURODRIVE

Model		Flange						Specify BD dimension when ordering
		AH	AJ	AK*	BB	BD	BF	GA
RF77R37	Option 1	3.15 80	10.43 265	9.055 230	0.16 4	11.81 300	0.53 13.5	0.73 18.5
	Option 2	3.15 80	8.46 215	7.087 180	0.16 4	9.84 250	0.53 13.5	0.73 18.5
RF87R57	Option 1	3.94 100	11.81 300	9.843 250	0.20 5	13.78 350	0.69 17.5	0.83 21
	Option 2	3.94 100	10.43 265	9.055 230	0.16 4	11.81 300	0.53 13.5	0.77 19.5

*** Note: See page 18 for tolerances.**

VARIGEAR®							
Model	EC	LE	OA	RA	SD	UV	ZA
VU/VZ01	6.93 176	7.17 182	10.59 269	3.86 98	2.83 72	3.15 80	3.15 80
VU/VZ11	7.20 183	9.13 232	12.68 322	4.61 117	3.46 88	3.94 100	3.86 98
VU/VZ21	8.94 227	9.65 245	13.98 355	5.12 130	4.33 110	3.94 100	4.72 120
VU/VZ31	11.14 283	12.01 305	17.52 445	5.91 150	5.43 138	4.92 125	5.98 152

VARIGEAR® VU								
Model		VU01		VU11	VU21	VU31		
		DT71	DT80	DT90	DT100	DT100	DV112M	DV132S
RF77R37	C	29.49 749	29.49 749	31.26 794	— —	— —	— —	— —
	CD	8.39 213	8.39 213	9.37 238	— —	— —	— —	— —
RF87R57	C	34.37 873	34.37 873	36.14 918	38.78 985	41.81 1062	41.81 1062	41.81 1062
	CD	8.11 206	8.11 206	9.13 232	10.98 279	13.03 331	13.03 331	13.03 331

VARIGEAR® VZ								
Model		VZ01		VZ11	VZ21	VZ31		
		DT71	DT80	DT90	DT100	DT100	DV112M	DV132S
RF77R37	C	30.71 780	32.68 830	34.65 880	— —	— —	— —	— —
	CD	8.39 213	8.39 213	9.37 238	— —	— —	— —	— —
RF87R57	C	35.59 904	37.56 954	39.53 1004	42.36 1076	43.70 1110	45.20 1148	46.97 1193
	CD	8.11 206	8.11 206	9.13 232	10.98 279	13.03 331	13.03 331	13.03 331

Motor							
	VU/VZ01		VU/VZ11	VU/VZ21	VU/VZ31		
	DT71	DT80	DT90	DT100	DT100	DV112M	DV132S
AB	5.43 138	5.43 138	6.73 171	6.89 175	6.89 175	7.40 188	7.40 188
L	7.95 202	9.92 252	10.75 273	12.24 311	12.24 311	13.74 349	15.51 394
P	5.71 145	5.71 145	7.76 197	7.76 197	7.76 197	8.70 221	8.70 221

Dimension AB is to motor conduit box
Size VU6 is supplied with windless-type control

Eye bolts are removable
See page 56 for VARIGEAR® configuration options.

Dimensions subject to change without notice.

VU

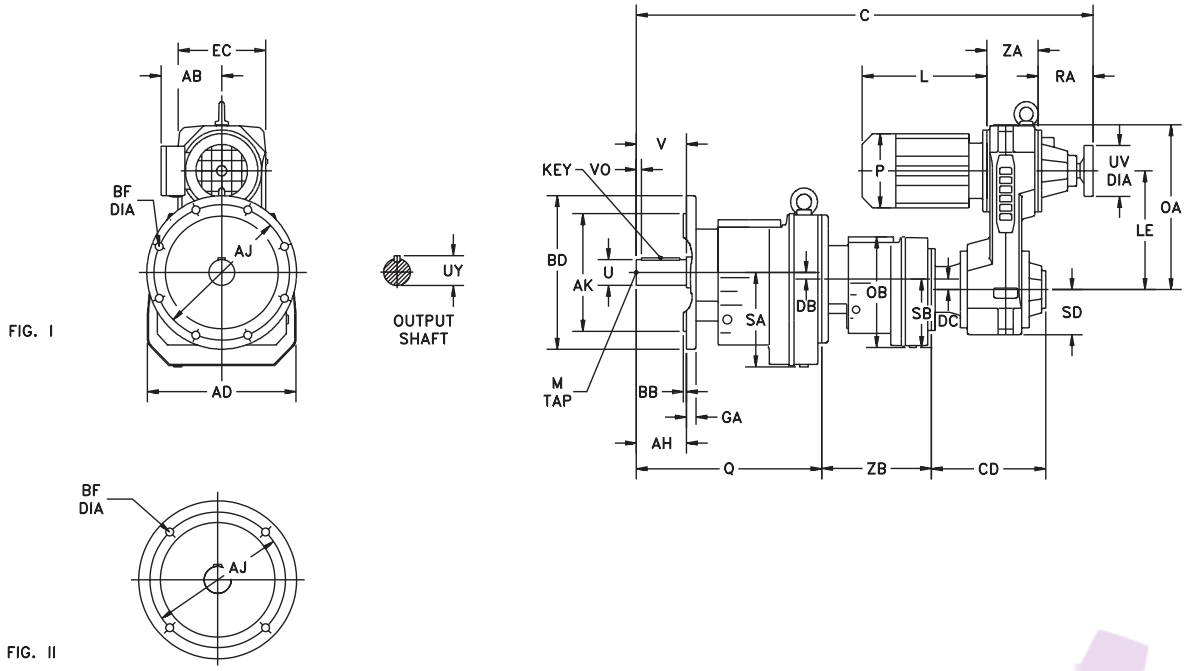

VZ

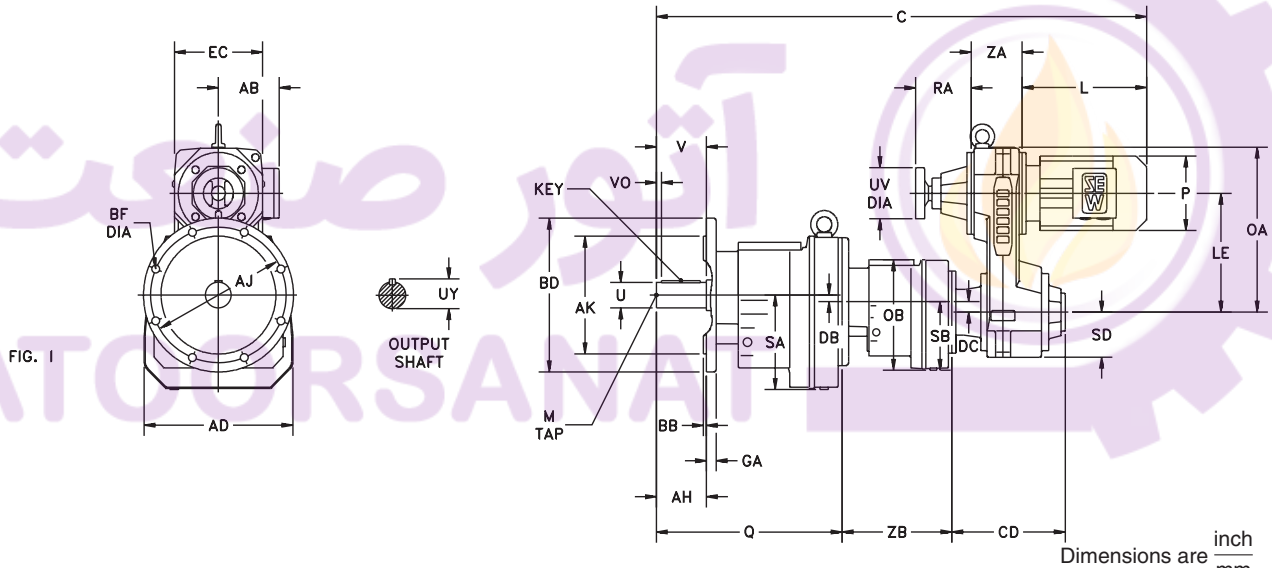

Dimensions are inch / mm

Gearcase							
Model	**AD**	**DB**	**DC**	**Q**	**SA**	**SB**	**ZB**
RF97R57	13.70 348	0.40 10.2	0.44 11.2	17.32 440	9.06 230	4.76 121	8.31 211
RF107R77	16.10 409	0.80 20.4	0.63 15.9	19.49 495	10.04 255	5.67 144	9.72 247

Output Shaft						
Model	**U***	**UY**	**V**	**VO**	**Key**	**M**
RF97R57	2.375 60	2.65 64	4.72 120	0.51 5	$\frac{5}{8} \times \frac{5}{8} \times 3\frac{5}{8}$ 18 x 11 x 110	$\frac{3}{4}$ – 10 × 1.61 M20 x 42
RF107R77	2.875 70	3.20 74.5	5.51 140	0.67 7.5	$\frac{3}{4} \times \frac{3}{4} \times 4\frac{1}{8}$ 20 x 12 x 125	$\frac{3}{4}$ – 10 × 1.61 M20 x 42

*** Note: See page 18 for tolerances.**

Dimensions subject to change without notice.

آتور صنعت ATOORSANAT
SEW EURODRIVE

Flange								Specify BD dimension when ordering
Model		**AH**	**AJ**	**AK***	**BB**	**BD**	**BF**	**GA**
RF97R57	**Fig. I**	4.72 120	15.75 400	13.780 350	0.20 5	17.72 450	0.69 17.5	1.00 25.5
	Fig. II	4.72 120	11.81 300	9.843 250	0.20 5	13.78 350	0.69 17.5	0.93 23.5
RF107R77	**Fig. I**	5.51 140	15.75 400	13.780 350	0.20 5	17.72 450	0.69 17.5	0.93 23.5
	Fig. II	5.51 140	11.81 300	9.843 250	0.20 5	13.78 350	0.69 17.5	0.79 20

*** Note: See page 18 for tolerances.**

VARIGEAR®							
Model	**EC**	**LE**	**OA**	**RA**	**SD**	**UV**	**ZA**
VU/VZ01	6.93 176	7.17 182	10.59 269	3.86 98	2.83 72	3.15 80	3.15 80
VU/VZ11	7.20 183	9.13 232	12.68 322	4.61 117	3.46 88	3.94 100	3.86 98
VU/VZ21	8.94 227	9.65 245	13.98 355	5.12 130	4.33 110	3.94 100	4.72 120
VU/VZ31	11.14 283	12.01 305	17.52 445	5.91 150	5.43 138	4.92 125	5.98 152
VU/VZ41	13.70 348	14.96 380	21.77 553	7.44 189	6.69 170	7.87 200	7.09 180

VARIGEAR® VU											
Model		**VU01**		**VU11**	**VU21**	**VU31**			**VU41**		
		DT71	**DT80**	**DT90**	**DT100**	**DT100**	**DV112M**	**DV132S**	**DV132M**	**DV132ML**	**DV160M**
RF97R57	**C**	36.85 936	36.85 936	38.62 981	41.26 1048	44.29 1125	44.29 1125	44.29 1125	— —	— —	— —
	CD	8.11 206	8.11 206	9.13 232	10.98 279	13.03 331	13.03 331	13.03 331	— —	— —	— —
RF107R77	**C**	— —	— —	41.97 1066	44.53 1131	47.52 1207	47.52 1207	47.52 1207	51.97 1320	51.97 1320	51.97 1320
	CD	— —	— —	8.90 226	10.67 271	12.68 322	12.68 322	12.68 322	15.63 397	15.63 397	15.63 397

VARIGEAR® VZ											
Model		**VZ01**		**VZ11**	**VZ21**	**VZ31**			**VZ41**		
		DT71	**DT80**	**DT90**	**DT100**	**DT100**	**DV112M**	**DV132S**	**DV132M**	**DV132ML**	**DV160M**
RF97R57	**C**	38.07 967	40.04 1017	42.01 1067	44.84 1139	46.18 1173	47.68 1211	49.45 1256	— —	— —	— —
	CD	8.11 206	8.11 206	9.13 232	10.98 279	13.03 331	13.03 331	13.03 331	— —	— —	— —
RF107R77	**C**	— —	— —	45.35 1152	48.11 1222	49.41 1255	50.91 1293	52.68 1338	54.45 1383	56.81 1443	56.81 1443
	CD	— —	— —	8.90 226	10.67 271	12.68 322	12.68 322	12.68 322	15.63 397	15.63 397	15.63 397

Motor										
	VU/VZ01		**VU/VZ11**	**VU/VZ21**	**VU/VZ31**			**VU/VZ41**		
	DT71	**DT80**	**DT90**	**DT100**	**DT100**	**DV112M**	**DV132S**	**DV132M**	**DV132ML**	**DV160M**
AB	5.43 138	5.43 138	6.73 171	6.89 175	6.89 175	7.40 188	7.40 188	9.13 232	9.13 232	9.13 232
L	7.95 202	9.92 252	10.75 273	12.24 311	12.24 311	13.74 349	15.51 394	15.83 402	18.19 462	18.19 462
P	5.71 145	5.71 145	7.76 197	7.76 197	7.76 197	8.70 221	8.70 221	10.83 275	10.83 275	10.83 275

Dimension AB is to motor conduit box
Eye bolts are removable
Size VU6 is supplied with windless-type control
See page 56 for VARIGEAR® configuration options.

Dimensions subject to change without notice.

VU

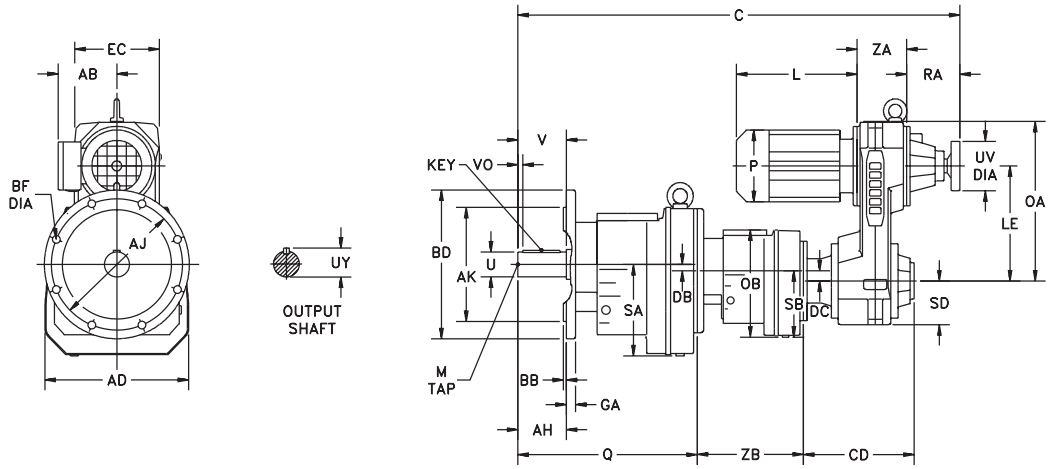

VZ

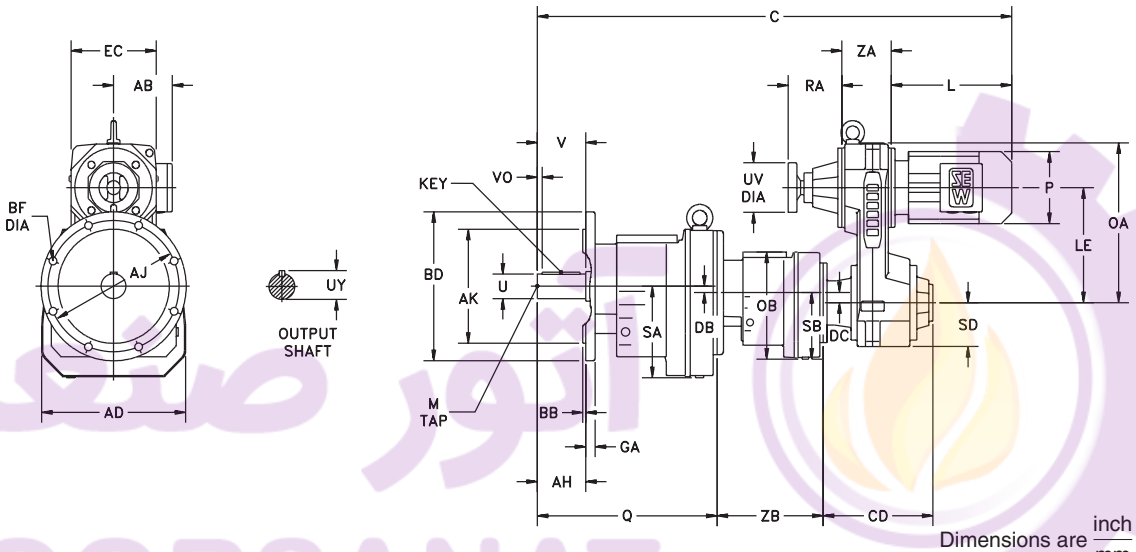

Dimensions are inch / mm

Model	Gearcase AD	DB	DC	Q	SA	SB	ZB	Output Shaft U*	UY	V	VO	Key	M
RF137R77	18.03 458	0.99 25.1	0.63 15.9	23.19 589	12.60 320	5.67 144	9.45 240	3.625 90	4.01 95	6.69 170	0.63 5	7/8 × 7/8 × 5 3/8 25 x 14 x 160	1– 8 × 2.13 M24 x 50
RF147R77	21.26 540	1.31 33.4	0.63 15.9	27.36 695	14.21 361	5.67 144	9.13 232	4.375 110	4.82 116	8.27 210	1.09 15	1× 1× 6 28 x 16 x 180	1– 8 × 2.13 M24 x 50
RF147R87	21.26 540	1.31 33.4	0.50 12.6	27.36 695	14.21 361	7.24 184	11.02 280	4.375 110	4.82 116	8.27 210	1.09 15	1× 1× 6 28 x 16 x 180	1– 8 × 2.13 M24 x 50

Model		Flange AH	AJ	AK*	BB	BD	BF	GA
						Specify BD dimension when ordering		
RF137R77	Option 1	6.69 170	19.69 500	17.717 450	0.20 5	21.65 550	0.69 17.5	1.10 28
	Option 2	6.69 170	15.75 400	13.780 350	0.20 5	17.72 450	0.69 17.5	1.10 28
RF147R77	Option 1	8.27 210	19.69 500	17.717 450	0.20 5	21.65 550	0.69 17.5	1.22 31
	Option 2	8.27 210	15.75 400	13.780 350	0.20 5	17.72 450	0.69 17.5	1.22 31
RF147R87	Option 1	8.27 210	19.69 500	17.717 450	0.20 5	21.65 550	0.69 17.5	1.22 31
	Option 2	8.27 210	15.75 400	13.780 350	0.20 5	17.72 450	0.69 17.5	1.22 31

*** Note: See page 18 for tolerances.**

Dimensions subject to change without notice.

آتور صنعت ATOORSANAT SEW EURODRIVE

VARIGEAR®							
Model	**EC**	**LE**	**OA**	**RA**	**SD**	**UV**	**ZA**
VU/VZ11	7.20 183	9.13 232	12.68 322	4.61 117	3.46 88	3.94 100	3.86 98
VU/VZ21	8.94 227	9.65 245	13.98 355	5.12 130	4.33 110	3.94 100	4.72 120
VU/VZ31	11.14 283	12.01 305	17.52 445	5.91 150	5.43 138	4.92 125	5.98 152
VU/VZ41	13.70 348	14.96 380	21.77 553	7.44 189	6.69 170	7.87 200	7.09 180
VU51	15.67 398	18.11 460	25.91 658	8.66 220	7.68 195	7.87 200	7.87 200

VARIGEAR® VU											
Model		**VU11**	**VU21**	**VU31**			**VU41**			**VU51**	
		DT90	**DT100**	**DT100**	**DV112M**	**DV132S**	**DV132M**	**DV132ML**	**DV160M**	**DV160L**	**DV180**
RF137R77	**C**	45.39 1153	47.95 1218	50.94 1294	50.94 1294	50.94 1294	55.39 1407	55.39 1407	55.39 1407	— —	— —
	CD	8.90 226	10.67 271	12.68 322	12.68 322	12.68 322	15.63 397	15.63 397	15.63 397	— —	— —
RF147R77	**C**	49.25 1251	51.81 1316	54.80 1392	54.80 1392	54.80 1392	59.25 1505	59.25 1505	59.25 1505	— —	— —
	CD	8.90 226	10.67 271	12.68 322	12.68 322	12.68 322	15.63 397	15.63 397	15.63 397	— —	— —
RF147R87	**C**	— —	53.54 1360	56.50 1435	56.50 1435	56.50 1435	60.94 1548	60.94 1548	60.94 1548	64.25 1632	64.25 1632
	CD	— —	10.51 267	12.48 317	12.48 317	12.48 317	15.43 392	15.43 392	15.43 392	17.68 449	17.68 449

VARIGEAR® VZ									
Model		**VZ11**	**VZ21**	**VZ31**			**VZ41**		
		DT90	**DT100**	**DT100**	**DV112M**	**DV132S**	**DV132M**	**DV132ML**	**DV160M**
RF137R77	**C**	48.78 1239	51.54 1309	52.83 1342	54.33 1380	56.10 1425	57.87 1470	60.24 1530	60.24 1530
	CD	8.90 226	10.67 271	12.68 322	12.68 322	12.68 322	15.63 397	15.63 397	15.63 397
RF147R77	**C**	52.64 1337	55.39 1407	56.69 1440	58.19 1478	59.96 1523	61.73 1568	64.09 1628	64.09 1628
	CD	8.90 226	10.67 271	12.68 322	12.68 322	12.68 322	15.63 397	15.63 397	15.63 397
RF147R87	**C**	— —	57.13 1451	58.39 1483	59.88 1521	61.65 1566	63.43 1611	65.79 1671	65.79 1671
	CD	— —	10.51 267	12.48 317	12.48 317	12.48 317	15.43 392	15.43 392	15.43 392

Motor										
	VU/VZ11	**VU/VZ21**	**VU/VZ31**			**VU/VZ41**			**VU51**	
	DT90	**DT100**	**DT100**	**DV112M**	**DV132S**	**DV132M**	**DV132ML**	**DV160M**	**DV160L**	**DV180**
AB	6.73 171	6.89 175	6.89 175	7.40 188	7.40 188	9.13 232	9.13 232	9.13 232	10.04 255	10.55 268
L	10.75 273	12.24 311	12.24 311	13.74 349	15.51 394	15.83 402	18.19 462	18.19 462	19.80 503	22.64 575
P	7.76 197	7.76 197	7.76 197	8.70 221	8.70 221	10.83 275	10.83 275	10.83 275	13.03 331	13.03 331

Dimension AB is to motor conduit box
Eye bolts are removable
Size VU6 is supplied with windless-type control
See page 56 for VARIGEAR® configuration options.

VU

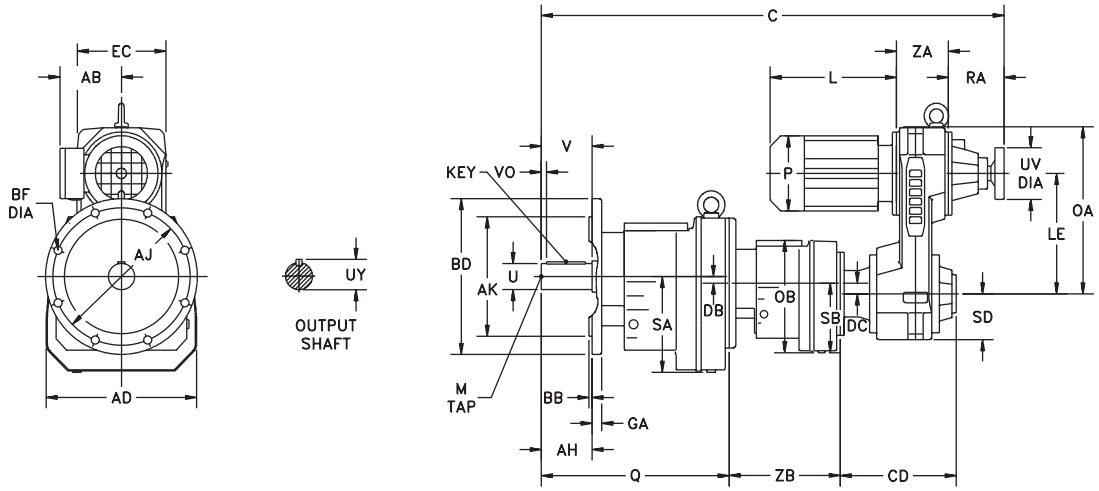

VZ

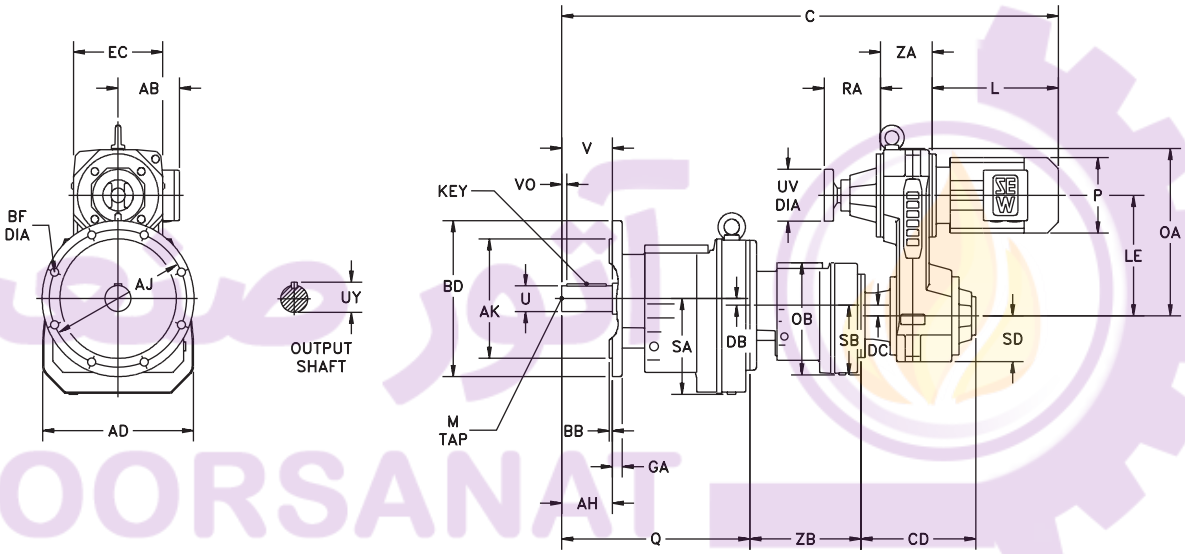

آتور صنعت
ATOORSANAT

Dimensions are inch / mm

Gearcase							
Model	**AD**	**DB**	**DC**	**Q**	**SA**	**SB**	**ZB**
RF167R97	26.38 670	2.36 59.9	0.40 10.2	31.10 790	16.93 430	9.06 230	12.80 325
RF167R107	26.38 670	2.36 59.9	0.80 20.4	31.10 790	16.93 430	10.04 255	15.04 382

Output Shaft						
Model	**U***	**UY**	**V**	**VO**	**Key**	**M**
RF167R97	4.750 120	5.29 127	8.27 210	0.82 5	1¼ × 1¼ × 6 9/16 32 x 18 x 200	1– 8 × 2.13 M24 x 50
RF167R107	4.750 120	5.29 127	8.27 210	0.82 5	1¼ × 1¼ × 6 9/16 32 x 18 x 200	1– 8 × 2.13 M24 x 50

*** Note: See page 18 for tolerances.**

Dimensions subject to change without notice.

آتور صنعت ATOORSANAT
SEW EURODRIVE

Flange								Specify BD dimension when ordering
Model	**AH**	**AH**	**AJ**	**AK***	**BB**	**BD**	**BF**	**GA**
RF167R97	**Option 1**	8.27 210	23.62 600	21.654 550	0.24 6	25.98 660	0.87 22	1.26 32
	Option 2	8.27 210	19.69 500	17.717 450	0.20 5	21.65 550	0.69 17.5	1.26 32
RF167R107	**Option 1**	8.27 210	23.62 600	21.654 550	0.24 6	25.98 660	0.87 22	1.26 32
	Option 2	8.27 210	19.69 500	17.717 450	0.20 5	21.65 550	0.69 17.5	1.26 32

*** Note: See page 18 for tolerances.**

VARIGEAR®							
Model	**EC**	**LE**	**OA**	**RA**	**SD**	**UV**	**ZA**
VU/VZ31	11.14 283	12.01 305	17.52 445	5.91 150	5.43 138	4.92 125	5.98 152
VU/VZ41	13.70 348	14.96 380	21.77 553	7.44 189	6.69 170	7.87 200	7.09 180
VU51	15.67 398	18.11 460	25.91 658	8.66 220	7.68 195	7.87 200	7.87 200
VU6	18.94 481	22.60 574	31.69 805	6.10 155	9.65 245	15.16 385	8.43 214

VARIGEAR® VU												
Model		**VU31**			**VU41**			**VU51**		**VU6**		
		DT100	**DV112M**	**DV132S**	**DV132M**	**DV132ML**	**DV160M**	**DV160L**	**DV180**	**DV180**	**DV200**	**DV225**
RF167R97	**C**	61.81 1570	61.81 1570	61.81 1570	66.26 1683	66.26 1683	66.26 1683	69.57 1767	69.57 1767	— —	— —	— —
	CD	12.28 312	12.28 312	12.28 312	15.24 387	15.24 387	15.24 387	17.48 444	17.48 444	— —	— —	— —
RF167R107	**C**	— —	— —	— —	68.27 1734	68.27 1734	68.27 1734	71.57 1818	71.57 1818	73.90 1877	73.90 1877	73.90 1877
	CD	— —	— —	— —	15.00 381	15.00 381	15.00 381	17.24 438	17.24 438	26.06 662	26.06 662	26.06 662

VARIGEAR® VZ							
Model		**VZ31**			**VZ41**		
		DT100	**DV112M**	**DV132S**	**DV132M**	**DV132ML**	**DV160M**
RF167R97	**C**	63.70 1618	65.20 1656	66.97 1701	68.74 1746	71.10 1806	71.10 1806
	CD	12.28 312	12.28 312	12.28 312	15.24 387	15.24 387	15.24 387
RF167R107	**C**	— —	— —	— —	70.75 1797	73.11 1857	73.11 1857
	CD	— —	— —	— —	15.00 381	15.00 381	15.00 381

Motor												
		VU/VZ31			**VU/VZ41**			**VU51**		**VU6**		
		DT100	**DV112M**	**DV132S**	**DV132M**	**DV132ML**	**DV160M**	**DV160L**	**DV180**	**DV180**	**DV200**	**DV225**
	AB	6.89 175	7.40 188	7.40 188	9.13 232	9.13 232	9.13 232	10.04 255	10.55 268	10.55 268	11.81 300	11.97 304
	L	12.24 311	13.74 349	15.51 394	15.83 402	18.19 462	18.19 462	19.80 503	22.64 575	22.64 575	24.53 623	28.54 725
	P	7.76 197	8.70 221	8.70 221	10.83 275	10.83 275	10.83 275	13.03 331	13.03 331	13.03 331	15.51 394	15.51 394

Dimension AB is to motor conduit box
Eye bolts are removable
Size VU6 is supplied with windless-type control
See page 56 for VARIGEAR® configuration options.

1.F-Series Dimensions

VU

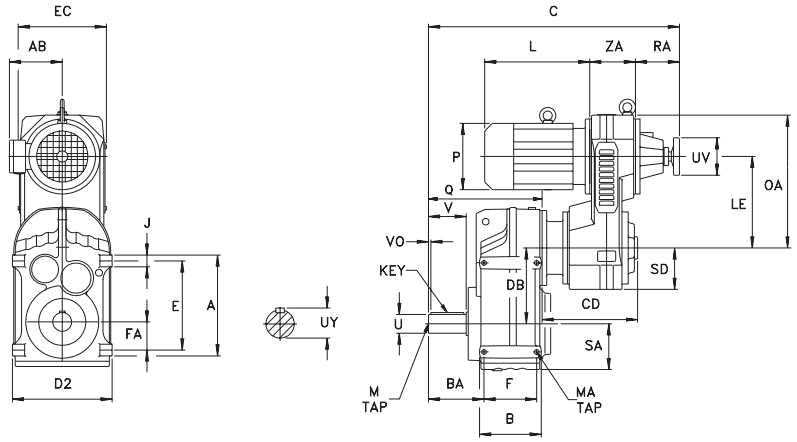

VZ

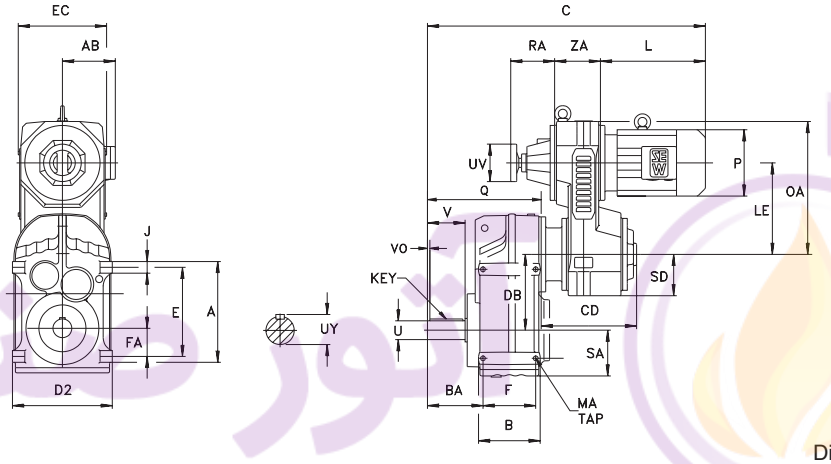

Dimensions are inch / mm

GEARCASE												
Model	A	B	BA	D2	DB	E	F	FA	J	MA	Q	SA
F37	5.31 135	3.74 95	2.85 72.5	6.50 165	4.41 112	4.53 115	3.03 77	1.22 31	0.79 20	M8 x .43 M8 x 11	6.30 160	2.99 76
F47	6.50 165	4.29 109	3.58 91	7.09 180	5.04 128.1	5.71 145	3.66 93	1.69 43	0.79 20	M10 x .59 M10 x 15	7.60 193	3.03 77
F57	7.68 195	4.96 126	4.11 104.5	7.87 200	5.35 136	6.69 170	4.02 102	2.17 55	0.98 25	M12 x .67 M12 x 17	8.70 221	3.66 93
F67	8.46 215	5.16 131	4.67 118.5	8.35 212	6.28 159.5	7.48 190	4.41 112	2.36 60	0.98 25	M12 x .67 M12 x 17	9.53 242	3.82 97

OUTPUT SHAFT						
Model	U*	UY	V	VO	Key	M
F37	1.000 25	1.11 28	1.97 50	0.32 5	$\frac{1}{4} \times \frac{1}{4} \times 1\frac{5}{16}$ 8 x 7 x 40	$\frac{3}{8}$ – 16 × 0.87 M10 x 22
F47	1.250 30	1.36 33	2.36 60	0.26 3.5	$\frac{1}{4} \times \frac{1}{4} \times 1\frac{11}{16}$ 8 x 7 x 50	$\frac{1}{2}$ – 13 × 1.12 M10 x 22
F57	1.375 35	1.51 38	2.76 70	0.43 7	$\frac{5}{16} \times \frac{5}{16} \times 1\frac{13}{16}$ 10 x 8 x 56	$\frac{1}{2}$ – 13 × 1.12 M12 x 28
F67	1.625 40	1.79 43	3.15 80	0.38 5	$\frac{3}{8} \times \frac{3}{8} \times 2\frac{1}{4}$ 12 x 8 x 70	$\frac{5}{8}$ – 11 × 1.38 M16 x 36

*** Note: See page 18 for tolerances.**

Dimensions subject to change without notice.

آتور صنعت ATOORSANAT SEW EURODRIVE

VARIGEAR®							
Model	**EC**	**LE**	**OA**	**RA**	**SD**	**UV**	**ZA**
VU/VZ01	6.93 176	7.17 182	10.59 269	3.86 98	2.83 72	3.15 80	3.15 80
VU/VZ11	7.20 183	9.13 232	12.68 322	4.61 117	3.46 88	3.94 100	3.86 98
VU/VZ21	8.94 227	9.65 245	13.98 355	5.12 130	4.33 110	3.94 100	4.72 120
VU/VZ31	11.14 283	12.01 305	17.52 445	5.91 150	5.43 138	4.92 125	5.98 152

VARIGEAR® VU								
Model		**VU01**		**VU11**	**VU21**	**VU31**		
		DT71	**DT80**	**DT90**	**DT100**	**DT100**	**DV112M**	**DV132S**
F37	**C**	17.80 452	17.80 452	19.57 497	— —	— —	— —	— —
	CD	8.39 213	8.39 213	9.37 238	— —	— —	— —	— —
F47	**C**	19.09 485	19.09 485	20.87 530	— —	— —	— —	— —
	CD	8.39 213	8.39 213	9.37 238	— —	— —	— —	— —
F57	**C**	19.92 506	19.92 506	21.69 551	24.33 618	27.36 695	27.36 695	27.36 695
	CD	8.11 206	8.11 206	9.13 232	10.98 279	13.03 331	13.03 331	13.03 331
F67	**C**	20.75 527	20.75 527	22.52 572	25.16 639	28.19 716	28.19 716	28.19 716
	CD	8.11 206	8.11 206	9.13 232	10.98 279	13.03 331	13.03 331	13.03 331

VARIGEAR® VZ								
Model		**VZ01**		**VZ11**	**VZ21**	**VZ31**		
		DT71	**DT80**	**DT90**	**DT100**	**DT100**	**DV112M**	**DV132S**
F37	**C**	19.02 483	20.98 533	22.95 583	— —	— —	— —	— —
	CD	8.39 213	8.39 213	9.37 238	— —	— —	— —	— —
F47	**C**	20.31 516	22.28 566	24.25 616	— —	— —	— —	— —
	CD	8.39 213	8.39 213	9.37 238	— —	— —	— —	— —
F57	**C**	21.14 537	23.11 587	25.08 637	27.91 709	29.25 743	30.75 781	32.52 826
	CD	8.11 206	8.11 206	9.13 232	10.98 279	13.03 331	13.03 331	13.03 331
F67	**C**	21.97 558	23.94 608	25.91 658	28.74 730	30.08 764	31.57 802	33.35 847
	CD	8.11 206	8.11 206	9.13 232	10.98 279	13.03 331	13.03 331	13.03 331

MOTOR							
	VU/VZ01		**VU/VZ11**	**VU/VZ21**	**VU/VZ31**		
	DT71	**DT80**	**DT90**	**DT100**	**DT100**	**DV112M**	**DV132S**
AB	5.43 138	5.43 138	6.73 171	6.89 175	6.89 175	7.40 188	7.40 188
L	7.95 202	9.92 252	10.75 273	12.24 311	12.24 311	13.74 349	15.51 394
P	5.71 145	5.71 145	7.76 197	7.76 197	7.76 197	8.70 221	8.70 221

Dimension AB is to motor conduit box
Eye bolts are removable
Size VU6 is supplied with windless-type control
See page 60 for VARIGEAR® configuration options.
See page 237 for available output shaft options.

Dimensions subject to change without notice.

VU

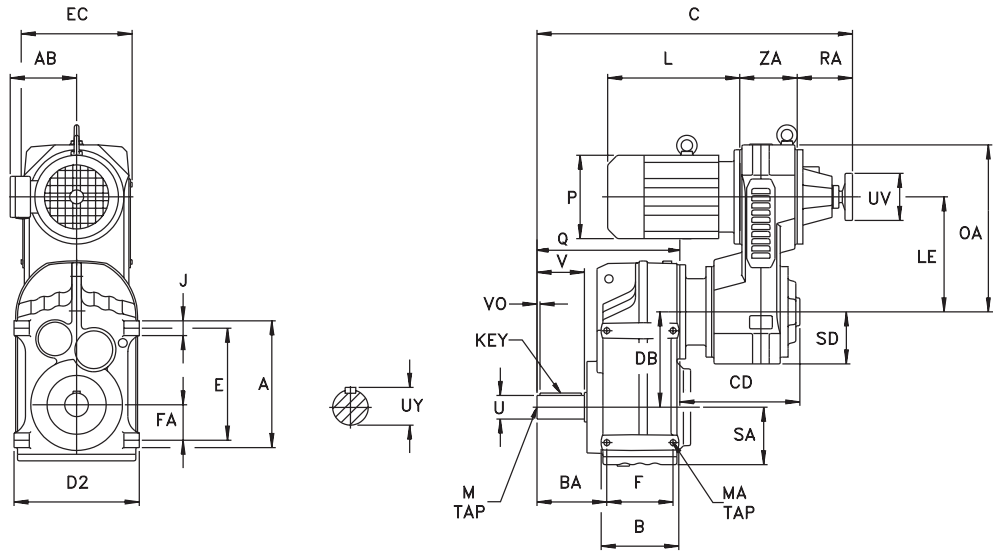

VZ

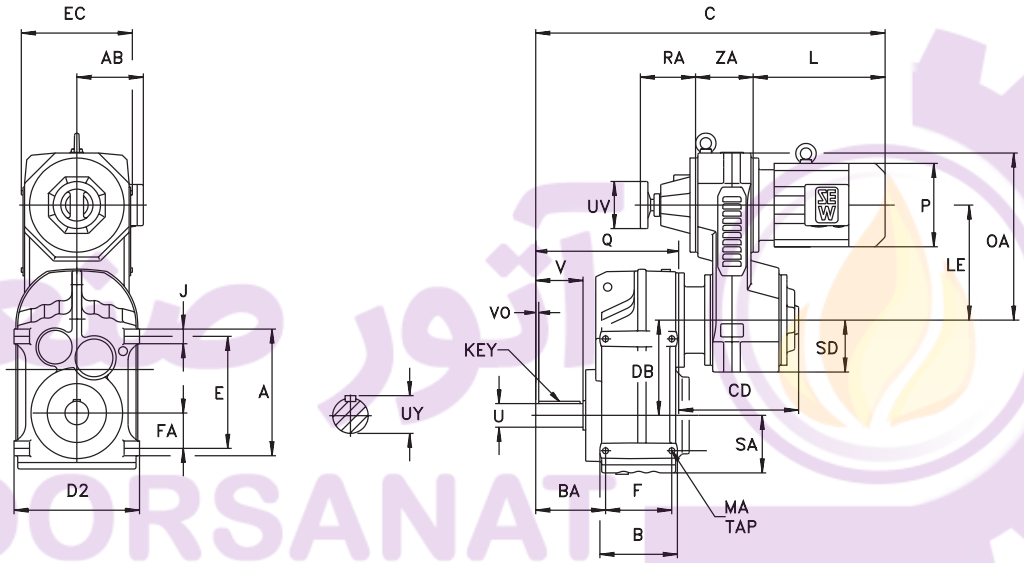

Dimensions are inch / mm

Gearcase												
Model	**A**	**B**	**BA**	**D2**	**DB**	**E**	**F**	**FA**	**J**	**MA**	**Q**	**SA**
F77	10.83 275	6.50 165	5.41 137.5	10.63 270	7.87 200	9.45 240	5.51 140	2.76 70	1.38 35	M16 x 1.02 M16 x 26	11.57 294	4.76 121
F87	13.78 350	7.68 195	6.42 163	12.99 330	9.71 246.7	12.20 310	6.50 165	3.94 100	1.57 40	M16 x 1.02 M16 x 26	13.54 344	5.98 152
F97	15.75 400	9.45 240	7.50 190.5	15.75 400	11.22 285	13.78 350	8.07 205	4.72 120	1.97 50	M20 x 1.10 M20 x 28	16.38 416	7.01 178

Output Shaft						
Model	**U***	**UY**	**V**	**VO**	**Key**	**M**
F77	2.000 50	2.22 53.5	3.94 100	0.64 10	$\frac{1}{2} \times \frac{1}{2} \times 2\frac{5}{8}$ 14 x 9 x 80	$\frac{3}{4} - 10 \times 1.61$ M16 x 36
F87	2.375 60	2.65 64	4.72 120	0.51 5	$\frac{5}{8} \times \frac{5}{8} \times 3\frac{5}{8}$ 18 x 11 x 110	$\frac{3}{4} - 10 \times 1.61$ M20 x 42
F97	2.875 70	3.20 74.5	5.51 140	0.67 7.5	$\frac{3}{4} \times \frac{3}{4} \times 4\frac{1}{8}$ 20 x 12 x 125	$\frac{3}{4} - 10 \times 1.61$ M20 x 42

*** Note: See page 18 for tolerances.**

Dimensions subject to change without notice.

آتور صنعت ATOORSANAT
SEW EURODRIVE

VARIGEAR®							
Model	**EC**	**LE**	**OA**	**RA**	**SD**	**UV**	**ZA**
VU/VZ11	7.20 183	9.13 232	12.68 322	4.61 117	3.46 88	3.94 100	3.86 98
VU/VZ21	8.94 227	9.65 245	13.98 355	5.12 130	4.33 110	3.94 100	4.72 120
VU/VZ31	11.14 283	12.01 305	17.52 445	5.91 150	5.43 138	4.92 125	5.98 152
VU/VZ41	13.70 348	14.96 380	21.77 553	7.44 189	6.69 170	7.87 200	7.09 180
VU51	15.67 398	18.11 460	25.91 658	8.66 220	7.68 195	7.87 200	7.87 200

VARIGEAR® VU											
Model		**VU11**	**VU21**	**VU31**			**VU41**			**VU51**	
		DT90	**DT100**	**DT100**	**DV112M**	**DV132S**	**DV132M**	**DV132ML**	**DV160M**	**DV160L**	**DV180**
F77	**C**	24.33 618	26.89 683	29.88 759	29.88 759	29.88 759	34.33 872	34.33 872	34.33 872	— —	— —
	CD	8.90 226	10.67 271	12.68 322	12.68 322	12.68 322	15.63 397	15.63 397	15.63 397	— —	— —
F87	**C**	— —	28.70 729	31.65 804	31.65 804	31.65 804	36.10 917	36.10 917	36.10 917	39.41 1001	39.41 1001
	CD	— —	10.51 267	12.48 317	12.48 317	12.48 317	15.43 392	15.43 392	15.43 392	17.68 449	17.68 449
F97	**C**	— —	— —	34.29 871	34.29 871	34.29 871	38.74 984	38.74 984	38.74 984	42.05 1068	42.05 1068
	CD	— —	— —	12.28 312	12.28 312	12.28 312	15.24 387	15.24 387	15.24 387	17.48 444	17.48 444

VARIGEAR® VZ									
Model		**VZ11**	**VZ21**	**VZ31**			**VZ41**		
		DT90	**DT100**	**DT100**	**DV112M**	**DV132S**	**DV132M**	**DV132ML**	**DV160M**
F77	**C**	27.72 704	30.47 774	31.77 807	33.27 845	35.04 890	36.81 935	39.17 995	39.17 995
	CD	8.90 226	10.67 271	12.68 322	12.68 322	12.68 322	15.63 397	15.63 397	15.63 397
F87	**C**	— —	32.28 820	33.54 852	35.04 890	36.81 935	38.58 980	40.94 1040	40.94 1040
	CD	— —	10.51 267	12.48 317	12.48 317	12.48 317	15.43 392	15.43 392	15.43 392
F97	**C**	— —	— —	36.18 919	37.68 957	39.45 1002	41.22 1047	43.58 1107	43.58 1107
	CD	— —	— —	12.28 312	12.28 312	12.28 312	15.24 387	15.24 387	15.24 387

Motor										
	VU/VZ11	**VU/VZ21**	**VU/VZ31**			**VU/VZ41**			**VU51**	
	DT90	**DT100**	**DT100**	**DV112M**	**DV132S**	**DV132M**	**DV132ML**	**DV160M**	**DV160L**	**DV180**
AB	6.73 171	6.89 175	6.89 175	7.40 188	7.40 188	9.13 232	9.13 232	9.13 232	10.04 255	10.55 268
L	10.75 273	12.24 311	12.24 311	13.74 349	15.51 394	15.83 402	18.19 462	18.19 462	19.80 503	22.64 575
P	7.76 197	7.76 197	7.76 197	8.70 221	8.70 221	10.83 275	10.83 275	10.83 275	13.03 331	13.03 331

Dimension AB is to motor conduit box
Eye bolts are removable
Size VU6 is supplied with windless-type control
See page 60 for VARIGEAR® configuration options.
See page 237 for available output shaft options.

VU

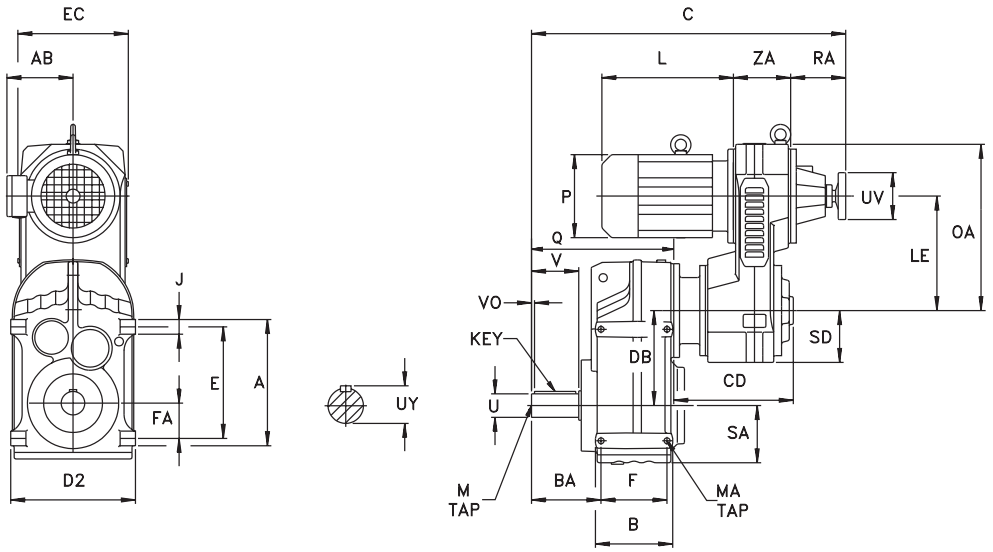

VZ

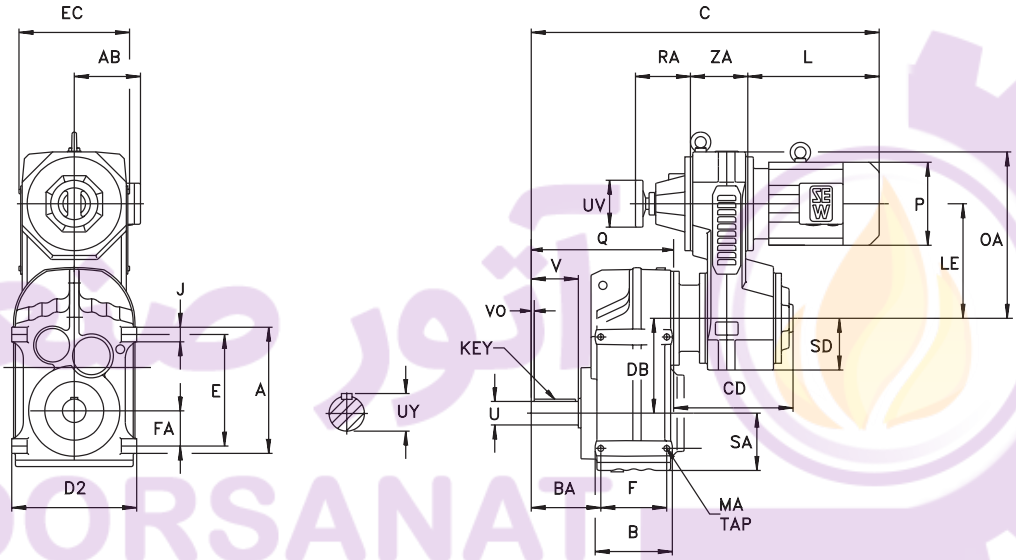

Dimensions are $\frac{\text{inch}}{\text{mm}}$

Gearcase												
Model	**A**	**B**	**BA**	**D2**	**DB**	**E**	**F**	**FA**	**J**	**MA**	**Q**	**SA**
F107	18.11 460	10.24 260	9.51 241.5	17.72 450	13.09 332.4	15.75 400	8.66 220	4.92 125	2.36 60	M24 x 1.42 M24 x 36	19.06 484	7.87 200
F127	20.47 520	12.44 316	11.46 291	20.87 530	15.06 382.6	17.72 450	10.63 270	5.59 142	2.76 70	M30 x 1.77 M30 x 45	23.03 585	9.29 236
F157	24.41 620	14.33 364	12.85 326.5	25.98 660	17.60 447	21.26 540	12.20 310	6.69 170	3.15 80	M36 x 2.17 M36 x 55	26.06 662	11.26 286

Output Shaft						
Model	**U***	**UY**	**V**	**VO**	**Key**	**M**
F107	3.625 90	4.01 95	6.69 170	0.63 5	$\frac{7}{8} \times \frac{7}{8} \times 5\frac{3}{8}$ 25 x 14 x 160	1– 8 × 2.13 M24 x 50
F127	4.375 110	4.82 116	8.27 210	1.09 15	1× 1× 6 28 x 16 x 180	1– 8 × 2.13 M24 x 50
F157	4.750 120	5.29 127	8.27 210	0.82 5	$1\frac{1}{4} \times 1\frac{1}{4} \times 6\frac{9}{16}$ 32 x 18 x 200	1– 8 × 2.13 M24 x 50

*** Note: See page 18 for tolerances.**

Dimensions subject to change without notice.

آتور صنعت ATOORSANAT
SEW EURODRIVE

VARIGEAR®							
Model	**EC**	**LE**	**OA**	**RA**	**SD**	**UV**	**ZA**
VU/VZ41	13.70 348	14.96 380	21.77 553	7.44 189	6.69 170	7.87 200	7.09 180
VU51	15.67 398	18.11 460	25.91 658	8.66 220	7.68 195	7.87 200	7.87 200
VU6	18.94 481	22.60 574	31.69 805	6.10 155	9.65 245	15.16 385	8.43 214

VARIGEAR® VU									
Model		**VU41**			**VU51**		**VU6**		
		DV132M	**DV132ML**	**DV160M**	**DV160L**	**DV180**	**DV180**	**DV200**	**DV225**
F107	**C**	41.18 1046	41.18 1046	41.18 1046	44.49 1130	44.49 1130	46.81 1189	46.81 1189	46.81 1189
	CD	15.00 381	15.00 381	15.00 381	17.24 438	17.24 438	26.06 662	26.06 662	26.06 662
F127	**C**	— —	— —	— —	47.87 1216	47.87 1216	50.20 1275	50.20 1275	50.20 1275
	CD	— —	— —	— —	16.65 423	16.65 423	25.47 647	25.47 647	25.47 647
F157	**C**	— —	— —	— —	— —	— —	54.21 1377	54.21 1377	54.21 1377
	CD	— —	— —	— —	— —	— —	25.16 639	25.16 639	25.16 639

VARIGEAR® VZ				
Model		**VZ41**		
		DV132M	**DV132ML**	**DV160M**
F107	**C**	43.66 1109	46.02 1169	46.02 1169
	CD	15.00 381	15.00 381	15.00 381

Motor								
	VU/VZ41			**VU51**		**VU6**		
	DV132M	**DV132ML**	**DV160M**	**DV160L**	**DV180**	**DV180**	**DV200**	**DV225**
AB	9.13 232	9.13 232	9.13 232	10.04 255	10.55 268	10.55 268	11.81 300	11.97 304
L	15.83 402	18.19 462	18.19 462	19.80 503	22.64 575	22.64 575	24.53 623	28.54 725
P	10.83 275	10.83 275	10.83 275	13.03 331	13.03 331	13.03 331	15.51 394	15.51 394

Dimension AB is to motor conduit box
Eye bolts are removable
Size VU6 is supplied with windless-type control
See page 60 for VARIGEAR® configuration options.
See page 237 for available output shaft options.

VU

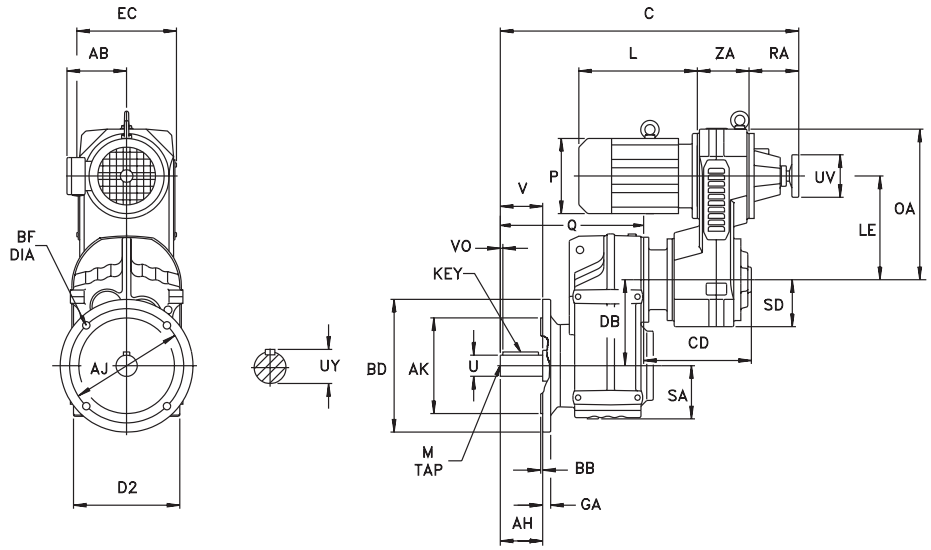

VZ

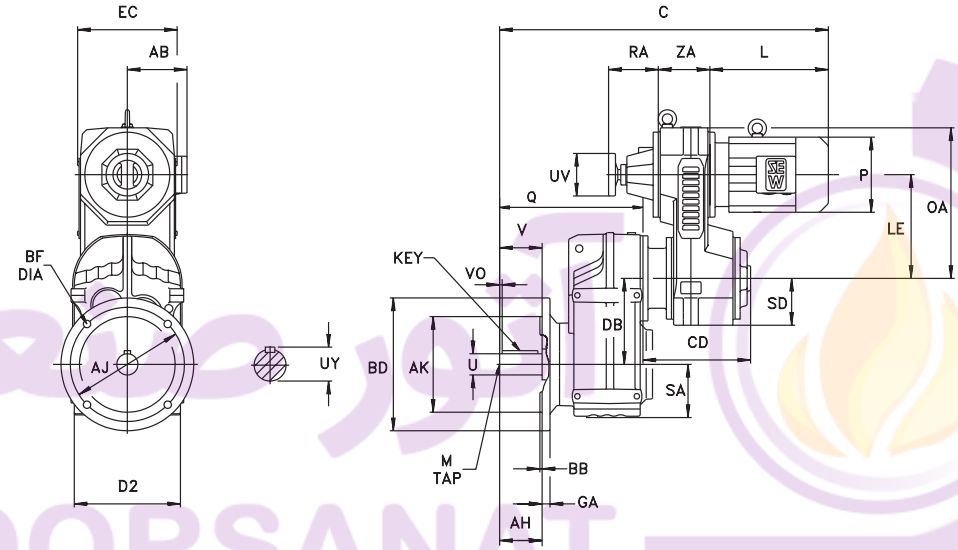

Dimensions are inch / mm

Model	Gearcase				Output Shaft					
	D2	DB	Q	SA	U*	UY	V	VO	Key	M
FF37	6.50 165	4.41 112	7.24 184	2.99 76	1.000 25	1.11 28	1.97 50	0.32 5	1/4 × 1/4 × 1 5/16 8 x 7 x 40	3/8 – 16 × 0.87 M10 x 22
FF47	7.09 180	5.04 128.1	8.35 212	3.03 77	1.250 30	1.36 33	2.36 60	0.26 3.5	1/4 × 1/4 × 1 11/16 8 x 7 x 50	1/2 – 13 × 1.12 M10 x 22
FF57	7.87 200	5.35 136	9.57 243	3.66 93	1.375 35	1.51 38	2.76 70	0.43 7	5/16 × 5/16 × 1 13/16 10 x 8 x 56	1/2 – 13 × 1.12 M12 x 28
FF67	8.35 212	6.28 159.5	10.39 264	3.82 97	1.625 40	1.79 43	3.15 80	0.38 5	3/8 × 3/8 × 2 1/4 12 x 8 x 70	5/8 – 11 × 1.38 M16 x 36

	Flange						
Model	AH	AJ	AK*	BB	BD	BF	GA
VU/VZ01	1.97 50	5.12 130	4.331 110	0.14 3.5	6.30 160	0.35 9	0.39 10
VU/VZ11	2.36 60	6.50 165	5.118 130	0.14 3.5	7.87 200	0.43 11	0.47 12
VU/VZ21	2.76 70	8.46 215	7.087 180	0.16 4	9.84 250	0.53 13.5	0.59 15
VU/VZ31	3.15 80	8.46 215	7.087 180	0.16 4	9.84 250	0.53 13.5	0.59 15

*** Note: See page 18 for tolerances.**

Dimensions subject to change without notice.

آتور صنعت ATOORSANAT
SEW EURODRIVE

VARIGEAR®							
Model	**EC**	**LE**	**OA**	**RA**	**SD**	**UV**	**ZA**
VU/VZ01	6.93 176	7.17 182	10.59 269	3.86 98	2.83 72	3.15 80	3.15 80
VU/VZ11	7.20 183	9.13 232	12.68 322	4.61 117	3.46 88	3.94 100	3.86 98
VU/VZ21	8.94 227	9.65 245	13.98 355	5.12 130	4.33 110	3.94 100	4.72 120
VU/VZ31	11.14 283	12.01 305	17.52 445	5.91 150	5.43 138	4.92 125	5.98 152

VARIGEAR® VU								
Model		**VU01**		**VU11**	**VU21**	**VU31**		
		DT71	**DT80**	**DT90**	**DT100**	**DT100**	**DV112M**	**DV132S**
FF37	**C**	18.74 476	18.74 476	20.51 521	— —	— —	— —	— —
	CD	8.39 213	8.39 213	9.37 238	— —	— —	— —	— —
FF47	**C**	19.84 504	19.84 504	21.61 549	— —	— —	— —	— —
	CD	8.39 213	8.39 213	9.37 238	— —	— —	— —	— —
FF57	**C**	20.79 528	20.79 528	22.56 573	25.20 640	28.23 717	28.23 717	28.23 717
	CD	8.11 206	8.11 206	9.13 232	10.98 279	13.03 331	13.03 331	13.03 331
FF67	**C**	21.61 549	21.61 549	23.39 594	26.02 661	29.06 738	29.06 738	29.06 738
	CD	8.11 206	8.11 206	9.13 232	10.98 279	13.03 331	13.03 331	13.03 331

VARIGEAR® VZ								
Model		**VZ01**		**VZ11**	**VZ21**	**VZ31**		
		DT71	**DT80**	**DT90**	**DT100**	**DT100**	**DV112M**	**DV132S**
FF37	**C**	19.96 507	21.93 557	23.90 607	— —	— —	— —	— —
	CD	8.39 213	8.39 213	9.37 238	— —	— —	— —	— —
FF47	**C**	21.06 535	23.03 585	25.00 635	— —	— —	— —	— —
	CD	8.39 213	8.39 213	9.37 238	— —	— —	— —	— —
FF57	**C**	22.01 559	23.98 609	25.94 659	28.78 731	30.12 765	31.61 803	33.39 848
	CD	8.11 206	8.11 206	9.13 232	10.98 279	13.03 331	13.03 331	13.03 331
FF67	**C**	22.83 580	24.80 630	26.77 680	29.61 752	30.94 786	32.44 824	34.21 869
	CD	8.11 206	8.11 206	9.13 232	10.98 279	13.03 331	13.03 331	13.03 331

Motor							
	VU/VZ01		**VU/VZ11**	**VU/VZ21**	**VU/VZ31**		
	DT71	**DT80**	**DT90**	**DT100**	**DT100**	**DV112M**	**DV132S**
AB	5.43 138	5.43 138	6.73 171	6.89 175	6.89 175	7.40 188	7.40 188
L	7.95 202	9.92 252	10.75 273	12.24 311	12.24 311	13.74 349	15.51 394
P	5.71 145	5.71 145	7.76 197	7.76 197	7.76 197	8.70 221	8.70 221

Dimension AB is to motor conduit box
Eye bolts are removable
Size VU6 is supplied with windless-type control
See page 60 for VARIGEAR® configuration options.
See page 237 for available output shaft options.

Dimensions subject to change without notice.

VU

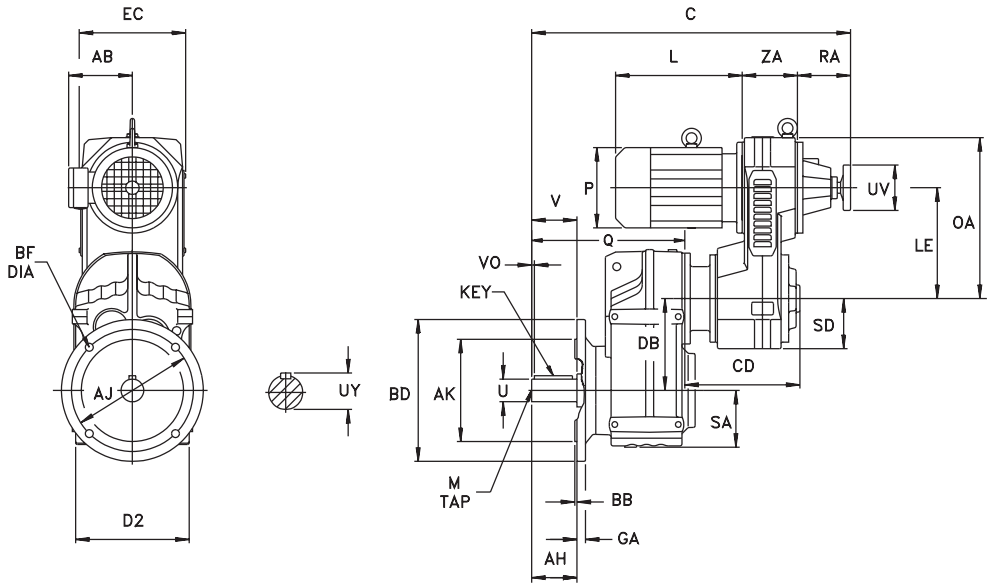

VZ

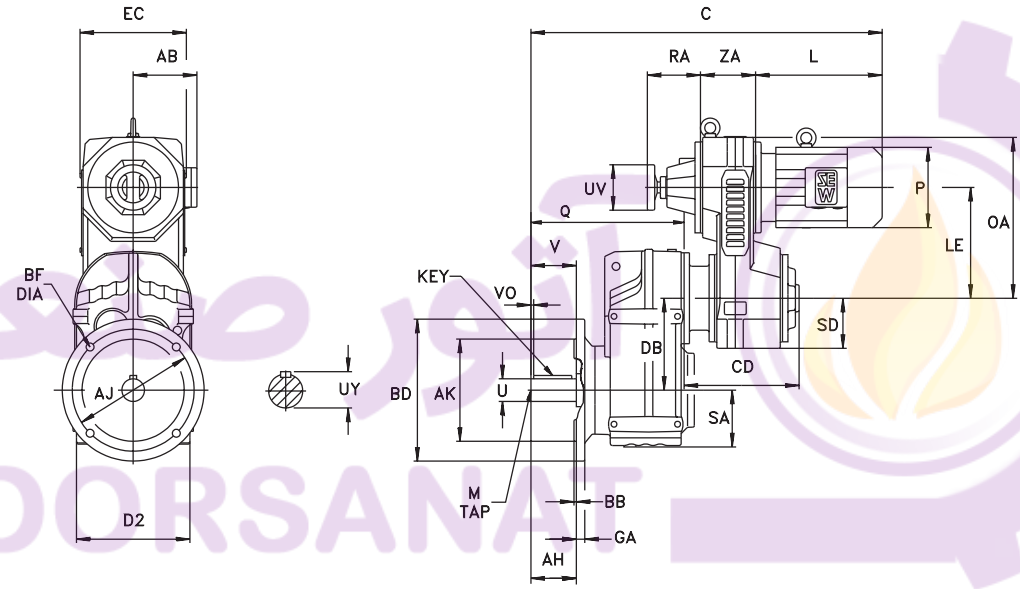

Dimensions are inch / mm

Model	Gearcase				Output Shaft					
	D2	DB	Q	SA	U*	UY	V	VO	Key	M
FF77	10.63 270	7.87 200	12.99 330	4.76 121	2.000 50	2.22 53.5	3.94 100	0.64 10	½ × ½ × 2⅝ 14 x 9 x 80	¾ – 10 × 1.61 M16 x 36
FF87	12.99 330	9.71 246.7	14.72 374	5.98 152	2.375 60	2.65 64	4.72 120	0.51 5	⅝ × ⅝ × 3⅝ 18 x 11 x 110	¾ – 10 × 1.61 M20 x 42

Flange								Specify BD dimension when ordering
Model		AH	AJ	AK*	BB	BD	BF	GA
FF77	Option 1	3.94 100	10.43 265	9.055 230	0.16 4	11.81 300	0.53 13.5	0.63 16
	** Option 2	3.94 100	8.46 215	7.087 180	0.16 4	9.84 250	0.53 13.5	0.59 15
FF87		4.72 120	11.81 300	9.843 250	0.20 5	13.78 350	0.69 17.5	0.71 18

*** Note: See page 18 for tolerances.**
**** This flange option reduces the gearbox torque rating - contact SEW-Eurodrive for details.**

Dimensions subject to change without notice.

آتور صنعت ATOORSANAT
SEW EURODRIVE

VARIGEAR®							
Model	**EC**	**LE**	**OA**	**RA**	**SD**	**UV**	**ZA**
VU/VZ11	7.20 183	9.13 232	12.68 322	4.61 117	3.46 88	3.94 100	3.86 98
VU/VZ21	8.94 227	9.65 245	13.98 355	5.12 130	4.33 110	3.94 100	4.72 120
VU/VZ31	11.14 283	12.01 305	17.52 445	5.91 150	5.43 138	4.92 125	5.98 152
VU/VZ41	13.70 348	14.96 380	21.77 553	7.44 189	6.69 170	7.87 200	7.09 180
VU51	15.67 398	18.11 460	25.91 658	8.66 220	7.68 195	7.87 200	7.87 200

VARIGEAR® VU											
Model		**VU11**	**VU21**	**VU31**			**VU41**			**VU51**	
		DT90	**DT100**	**DT100**	**DV112M**	**DV132S**	**DV132M**	**DV132ML**	**DV160M**	**DV160L**	**DV180**
FF77	**C**	25.75 654	28.31 719	31.30 795	31.30 795	31.30 795	35.75 908	35.75 908	35.75 908	— —	— —
	CD	8.90 226	10.67 271	12.68 322	12.68 322	12.68 322	15.63 397	15.63 397	15.63 397	— —	— —
FF87	**C**	— —	29.88 759	32.83 834	32.83 834	32.83 834	37.28 947	37.28 947	37.28 947	40.59 1031	40.59 1031
	CD	— —	10.51 267	12.48 317	12.48 317	12.48 317	15.43 392	15.43 392	15.43 392	17.68 449	17.68 449

VARIGEAR® VZ									
Model		**VZ11**	**VZ21**	**VZ31**			**VZ41**		
		DT90	**DT100**	**DT100**	**DV112M**	**DV132S**	**DV132M**	**DV132ML**	**DV160M**
FF77	**C**	29.13 740	31.89 810	33.19 843	34.69 881	36.46 926	38.23 971	40.59 1031	40.59 1031
	CD	8.90 226	10.67 271	12.68 322	12.68 322	12.68 322	15.63 397	15.63 397	15.63 397
FF87	**C**	— —	33.46 850	34.72 882	36.22 920	37.99 965	39.76 1010	42.13 1070	42.13 1070
	CD	— —	10.51 267	12.48 317	12.48 317	12.48 317	15.43 392	15.43 392	15.43 392

Motor										
	VU/VZ11	**VU/VZ21**	**VU/VZ31**			**VU/VZ41**			**VU51**	
	DT90	**DT100**	**DT100**	**DV112M**	**DV132S**	**DV132M**	**DV132ML**	**DV160M**	**DV160L**	**DV180**
AB	6.73 171	6.89 175	6.89 175	7.40 188	7.40 188	9.13 232	9.13 232	9.13 232	10.04 255	10.55 268
L	10.75 273	12.24 311	12.24 311	13.74 349	15.51 394	15.83 402	18.19 462	18.19 462	19.80 503	22.64 575
P	7.76 197	7.76 197	7.76 197	8.70 221	8.70 221	10.83 275	10.83 275	10.83 275	13.03 331	13.03 331

Dimension AB is to motor conduit box
Eye bolts are removable
Size VU6 is supplied with windless-type control
See page 60 for VARIGEAR® configuration options.
See page 237 for available output shaft options.

ATOORSANAT آتور صنعت

VU

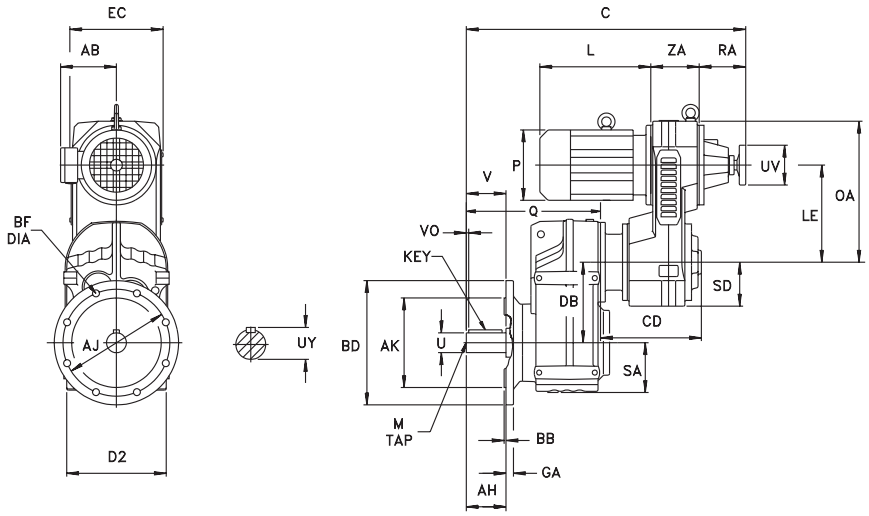

VZ

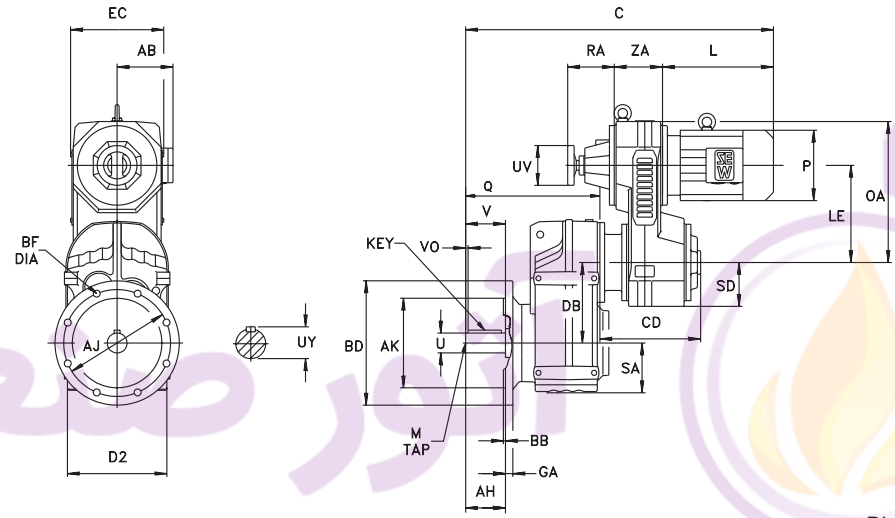

Dimensions are $\frac{\text{inch}}{\text{mm}}$

Model	Gearcase				Output Shaft					
	D2	DB	Q	SA	U*	UY	V	VO	Key	M
FF97	15.75 400	11.22 285	17.95 456	7.01 178	2.875 70	3.20 74.5	5.51 140	0.67 7.5	$\frac{3}{4} \times \frac{3}{4} \times 4\frac{1}{8}$ 20 x 12 x 125	$\frac{3}{4}$ – 10 × 1.61 M20 x 42
FF107	17.72 450	13.09 332.4	20.59 523	7.87 200	3.625 90	4.01 95	6.69 170	0.63 5	$\frac{7}{8} \times \frac{7}{8} \times 5\frac{3}{8}$ 25 x 14 x 160	1 – 8 × 2.13 M24 x 50
FF127	20.87 530	15.06 382.6	24.96 634	9.29 236	4.375 110	4.82 116	8.27 210	1.09 15	1 × 1 × 6 28 x 16 x 180	1 – 8 × 2.13 M24 x 50
FF157	25.98 660	17.60 447	28.54 725	11.26 286	4.750 120	5.29 127	8.27 210	0.82 5	$1\frac{1}{4} \times 1\frac{1}{4} \times 6\frac{9}{16}$ 32 x 18 x 200	1 – 8 × 2.13 M24 x 50

Flange							
MODEL	AH	AJ	AK*	BB	BD	BF	GA
FF97	5.51 140	15.75 400	13.780 350	0.20 5	17.72 450	0.69 17.5	0.87 22
FF107	6.69 170	15.75 400	13.780 350	0.20 5	17.72 450	0.69 17.5	0.87 22
FF127	8.27 210	19.69 500	17.717 450	0.20 5	21.65 550	0.69 17.5	0.98 25
FF157	8.27 210	23.62 600	21.654 550	0.24 6	25.98 660	0.87 22	1.10 28

*** Note: See page 18 for tolerances.**

Dimensions subject to change without notice.

آتور صنعت ATOORSANAT SEW EURODRIVE

VARIGEAR®							
Model	**EC**	**LE**	**OA**	**RA**	**SD**	**UV**	**ZA**
VU/VZ31	11.14 283	12.01 305	17.52 445	5.91 150	5.43 138	4.92 125	5.98 152
VU/VZ41	13.70 348	14.96 380	21.77 553	7.44 189	6.69 170	7.87 200	7.09 180
VU51	15.67 398	18.11 460	25.91 658	8.66 220	7.68 195	7.87 200	7.87 200
VU6	18.94 481	22.60 574	31.69 805	6.10 155	9.65 245	15.16 385	8.43 214

VARIGEAR® VU												
Model		**VU31**			**VU41**			**VU51**		**VU6**		
		DT100	**DV112M**	**DV132S**	**DV132M**	**DV132ML**	**DV160M**	**DV160L**	**DV180**	**DV180**	**DV200**	**DV225**
FF97	**C**	35.87 911	35.87 911	35.87 911	40.31 1024	40.31 1024	40.31 1024	43.62 1108	43.62 1108	— —	— —	— —
	CD	12.28 312	12.28 312	12.28 312	15.24 387	15.24 387	15.24 387	17.48 444	17.48 444	— —	— —	— —
FF107	**C**	— —	— —	— —	42.72 1085	42.72 1085	42.72 1085	46.02 1169	46.02 1169	48.35 1228	48.35 1228	48.35 1228
	CD	— —	— —	— —	15.00 381	15.00 381	15.00 381	17.24 438	17.24 438	26.06 662	26.06 662	26.06 662
FF127	**C**	— —	— —	— —	— —	— —	— —	49.80 1265	49.80 1265	52.13 1324	52.13 1324	52.13 1324
	CD	— —	— —	— —	— —	— —	— —	16.65 423	16.65 423	25.47 647	25.47 647	25.47 647
FF157	**C**	— —	— —	— —	— —	— —	— —	— —	— —	56.69 1440	56.69 1440	56.69 1440
	CD	— —	— —	— —	— —	— —	— —	— —	— —	25.16 639	25.16 639	25.16 639

VARIGEAR® VZ							
Model		**VZ31**			**VZ41**		
		DT100	**DV112M**	**DV132S**	**DV132M**	**DV132ML**	**DV160M**
FF97	**C**	37.76 959	39.25 997	41.02 1042	42.80 1087	45.16 1147	45.16 1147
	CD	12.28 312	12.28 312	12.28 312	15.24 387	15.24 387	15.24 387
FF107	**C**	— —	— —	— —	45.20 1148	47.56 1208	47.56 1208
	CD	— —	— —	— —	15.00 381	15.00 381	15.00 381

Motor											
	VU/VZ31			**VU/VZ41**			**VU51**		**VU6**		
	DT100	**DV112M**	**DV132S**	**DV132M**	**DV132ML**	**DV160M**	**DV160L**	**DV180**	**DV180**	**DV200**	**DV225**
AB	6.89 175	7.40 188	7.40 188	9.13 232	9.13 232	9.13 232	10.04 255	10.55 268	10.55 268	11.81 300	11.97 304
L	12.24 311	13.74 349	15.51 394	15.83 402	18.19 462	18.19 462	19.80 503	22.64 575	22.64 575	24.53 623	28.54 725
P	7.76 197	8.70 221	8.70 221	10.83 275	10.83 275	10.83 275	13.03 331	13.03 331	13.03 331	15.51 394	15.51 394

Dimension AB is to motor conduit box
Eye bolts are removable
Size VU6 is supplied with windless-type control
See page 60 for VARIGEAR® configuration options.
See page 237 for available output shaft options.

Dimensions subject to change without notice.

VU

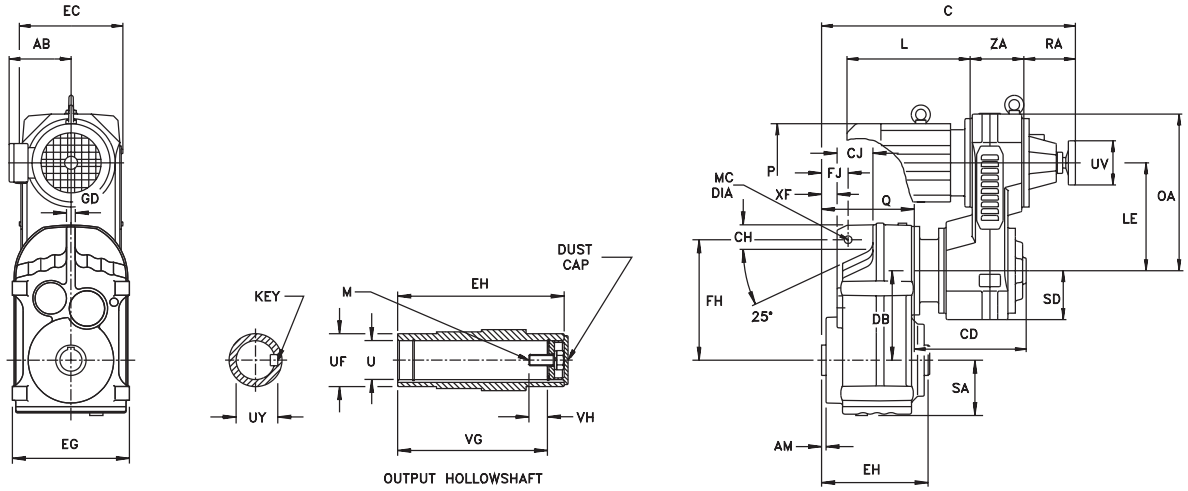

VZ

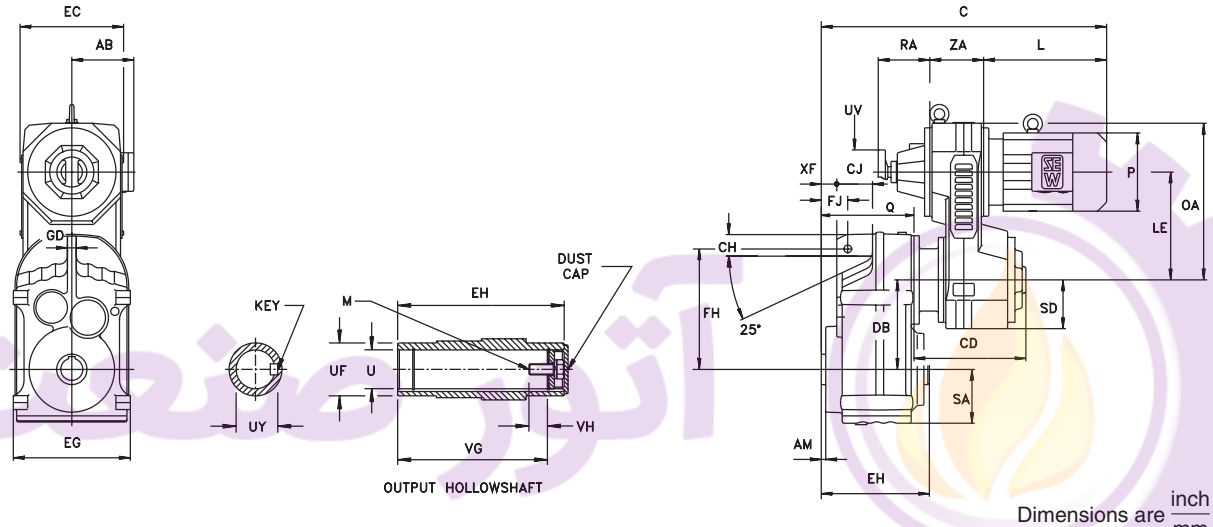

Dimensions are inch / mm

Gearcase												
Model	**AM**	**CH**	**CJ**	**DB**	**EG**	**FH**	**FJ**	**GD**	**MC**	**Q**	**SA**	**XF**
FA37	0.02 0.5	1.18 30	1.81 46	4.41 112	6.65 169	6.22 158	1.24 31.5	0.47 12	0.55 14	4.33 110	2.99 76	0.59 15
FA47	0.04 1	0.87 22	2.52 64	5.04 128.1	7.28 185	6.69 170	1.26 32	0.47 12	0.55 14	5.24 133	3.03 77	0.47 12
FA57	0.04 1	1.22 31	2.36 60	5.35 136	8.07 205	7.80 198	1.59 40.5	0.55 14	0.55 14	5.91 150	3.66 93	0.77 19.5
FA67	0.04 1	1.57 40	2.56 65	6.28 159.5	8.54 217	8.58 218	1.61 41	0.63 16	0.55 14	6.34 161	3.82 97	0.83 21

Output Shaft								
Model	**EH**	**U***	**UF**	**UY**	**VG**	**VH**	**Key**	**M**
FA37	4.72 120	1.250 30	1.77 45	1.37 33.3	4.13 105	0.67 17	$\frac{1}{4} \times \frac{1}{4} \times 1\frac{11}{16}$ 8 x 7 x 40	$\frac{7}{16} - 14 \times 1$ M10 x 25
FA47	5.91 150	1.375 35	1.97 50	1.52 38.3	5.20 132	0.65 22	$\frac{5}{16} \times \frac{5}{16} \times 1\frac{13}{16}$ 10 x 8 x 45	$\frac{1}{2} - 13 \times 1$ M12 x 30
FA57	7.09 180	1.500 40	2.17 55	1.67 43.3	6.14 156	1.36 29	$\frac{3}{8} \times \frac{3}{8} \times 2\frac{1}{4}$ 12 x 8 x 50	$\frac{5}{8} - 11 \times 1\frac{3}{4}$ M16 x 40
FA67	7.09 180	1.500 40	2.17 55	1.67 43.3	6.14 156	1.36 29	$\frac{3}{8} \times \frac{3}{8} \times 2\frac{1}{4}$ 12 x 8 x 50	$\frac{5}{8} - 11 \times 1\frac{3}{4}$ M16 x 40

*** Note: See page 18 for tolerances.**

Dimensions subject to change without notice.

آتور صنعت ATOORSANAT
SEW EURODRIVE

VARIGEAR®							
Model	**EC**	**LE**	**OA**	**RA**	**SD**	**UV**	**ZA**
VU/VZ01	6.93 176	7.17 182	10.59 269	3.86 98	2.83 72	3.15 80	3.15 80
VU/VZ11	7.20 183	9.13 232	12.68 322	4.61 117	3.46 88	3.94 100	3.86 98
VU/VZ21	8.94 227	9.65 245	13.98 355	5.12 130	4.33 110	3.94 100	4.72 120
VU/VZ31	11.14 283	12.01 305	17.52 445	5.91 150	5.43 138	4.92 125	5.98 152

VARIGEAR® VU								
Model		**VU01**		**VU11**	**VU21**	**VU31**		
		DT71	**DT80**	**DT90**	**DT100**	**DT100**	**DV112M**	**DV132S**
FA37	**C**	15.83 402	15.83 402	17.60 447	— —	— —	— —	— —
	CD	8.39 213	8.39 213	9.37 238	— —	— —	— —	— —
FA47	**C**	16.73 425	16.73 425	18.50 470	— —	— —	— —	— —
	CD	8.39 213	8.39 213	9.37 238	— —	— —	— —	— —
FA57	**C**	17.13 435	17.13 435	18.90 480	21.54 547	24.57 624	24.57 624	24.57 624
	CD	8.11 206	8.11 206	9.13 232	10.98 279	13.03 331	13.03 331	13.03 331
FA67	**C**	17.56 446	17.56 446	19.33 491	21.97 558	25.00 635	25.00 635	25.00 635
	CD	8.11 206	8.11 206	9.13 232	10.98 279	13.03 331	13.03 331	13.03 331

VARIGEAR® VZ								
Model		**VZ01**		**VZ11**	**VZ21**	**VZ31**		
		DT71	**DT80**	**DT90**	**DT100**	**DT100**	**DV112M**	**DV132S**
FA37	**C**	17.05 433	19.02 483	20.98 533	— —	— —	— —	— —
	CD	8.39 213	8.39 213	9.37 238	— —	— —	— —	— —
FA47	**C**	17.95 456	19.92 506	21.89 556	— —	— —	— —	— —
	CD	8.39 213	8.39 213	9.37 238	— —	— —	— —	— —
FA57	**C**	18.35 466	20.31 516	22.28 566	25.12 638	26.46 672	27.95 710	29.72 755
	CD	8.11 206	8.11 206	9.13 232	10.98 279	13.03 331	13.03 331	13.03 331
FA67	**C**	18.78 477	20.75 527	22.72 577	25.55 649	26.89 683	28.39 721	30.16 766
	CD	8.11 206	8.11 206	9.13 232	10.98 279	13.03 331	13.03 331	13.03 331

Motor							
	VU/VZ01		**VU/VZ11**	**VU/VZ21**	**VU/VZ31**		
	DT71	**DT80**	**DT90**	**DT100**	**DT100**	**DV112M**	**DV132S**
AB	5.43 138	5.43 138	6.73 171	6.89 175	6.89 175	7.40 188	7.40 188
L	7.95 202	9.92 252	10.75 273	12.24 311	12.24 311	13.74 349	15.51 394
P	5.71 145	5.71 145	7.76 197	7.76 197	7.76 197	8.70 221	8.70 221

Dimension AB is to motor conduit box
Eye bolts are removable
Size VU6 is supplied with windless-type control
See page 60 for VARIGEAR® configuration options.
See page 237 for available output shaft options.

Dimensions subject to change without notice.

VU

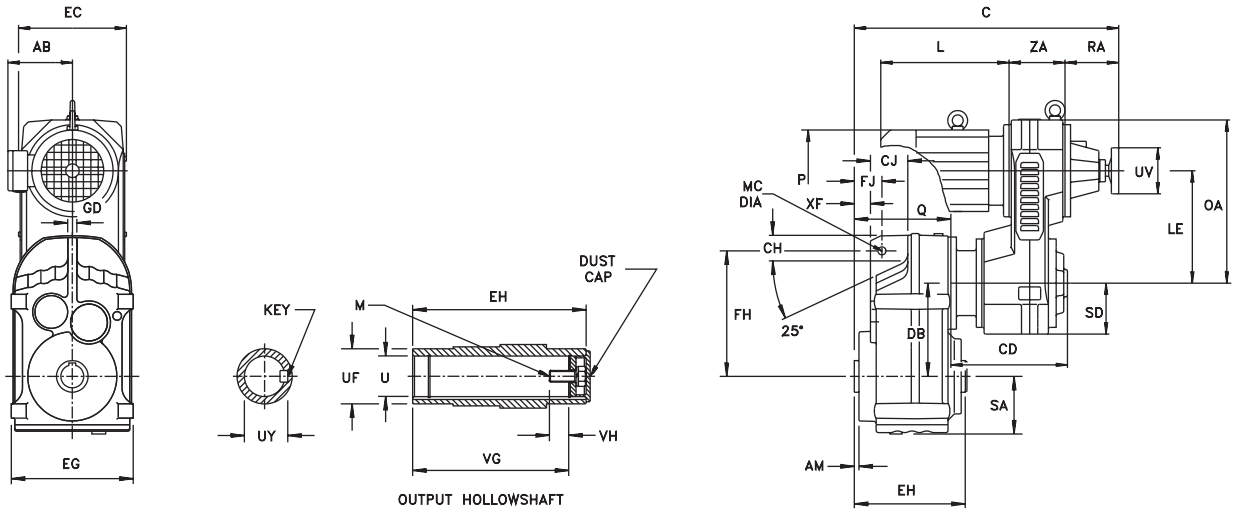

VZ

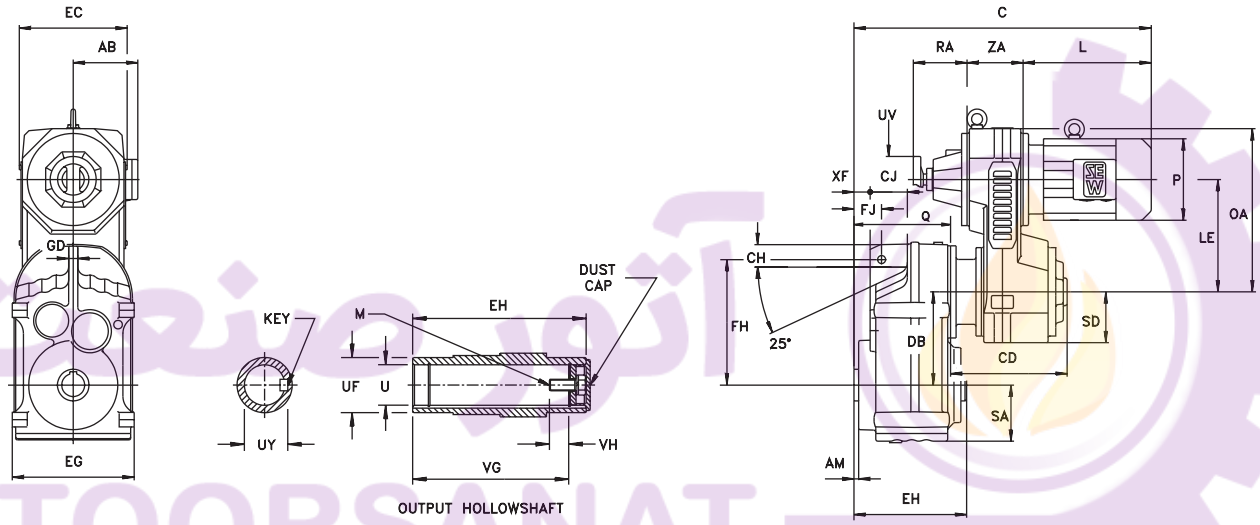

Dimensions are inch / mm

Gearcase												
Model	**AM**	**CH**	**CJ**	**DB**	**EG**	**FH**	**FJ**	**GD**	**MC**	**Q**	**SA**	**XF**
FA77	0.04	1.93	2.72	7.87	10.83	10.94	1.97	0.79	0.87	7.60	4.76	1.10
	1	49	69	200	275	278	50	20	22	193	121	28
FA87	0.04	2.24	3.11	9.71	13.23	13.62	2.44	1.02	0.87	8.82	5.98	1.26
	1	57	79	246.7	336	346	62	26	22	224	152	32
FA97	0.04	3.46	4.09	11.22	15.94	15.55	2.76	1.18	1.02	10.79	7.01	1.34
	1	88	104	285	405	395	70	30	26	274	178	34

Output Shaft								
Model	**EH**	**U***	**UF**	**UY**	**VG**	**VH**	**Key**	**M**
FA77	8.27	2.000	2.76	2.22	7.20	1.16	$\frac{1}{2} \times \frac{1}{2} \times 2\frac{5}{8}$	$\frac{5}{8} - 11 \times 1\frac{3}{4}$
	210	50	70	53.8	183	32	14 x 9 x 80	M16 x 45
FA87	9.45	2.375	3.35	2.65	8.27	1.39	$\frac{5}{8} \times \frac{5}{8} \times 3\frac{5}{8}$	$\frac{3}{4} - 10 \times 2$
	240	60	85	64.4	210	36	18 x 11 x 100	M20 x 50
FA97	11.81	2.750	3.74	3.03	10.63	1.24	$\frac{5}{8} \times \frac{5}{8} \times 3\frac{5}{8}$	$\frac{3}{4} - 10 \times 2$
	300	70	95	74.9	270	34	20 x 12 x 110	M20 x 50

*** Note: See page 18 for tolerances.**

Dimensions subject to change without notice.

آتور صنعت ATOORSANAT
SEW EURODRIVE

VARIGEAR®							
Model	**EC**	**LE**	**OA**	**RA**	**SD**	**UV**	**ZA**
VU/VZ11	7.20 183	9.13 232	12.68 322	4.61 117	3.46 88	3.94 100	3.86 98
VU/VZ21	8.94 227	9.65 245	13.98 355	5.12 130	4.33 110	3.94 100	4.72 120
VU/VZ31	11.14 283	12.01 305	17.52 445	5.91 150	5.43 138	4.92 125	5.98 152
VU/VZ41	13.70 348	14.96 380	21.77 553	7.44 189	6.69 170	7.87 200	7.09 180
VU51	15.67 398	18.11 460	25.91 658	8.66 220	7.68 195	7.87 200	7.87 200

VARIGEAR® VU											
Model		**VU11**	**VU21**	**VU31**			**VU41**			**VU51**	
		DT90	**DT100**	**DT100**	**DV112M**	**DV132S**	**DV132M**	**DV132ML**	**DV160M**	**DV160L**	**DV180**
FA77	**C**	20.35 517	22.91 582	25.91 658	25.91 658	25.91 658	30.35 771	30.35 771	30.35 771	— —	— —
	CD	8.90 226	10.67 271	12.68 322	12.68 322	12.68 322	15.63 397	15.63 397	15.63 397	— —	— —
FA87	**C**	— —	23.98 609	26.93 684	26.93 684	26.93 684	31.38 797	31.38 797	31.38 797	34.69 881	34.69 881
	CD	— —	10.51 267	12.48 317	12.48 317	12.48 317	15.43 392	15.43 392	15.43 392	17.68 449	17.68 449
FA97	**C**	— —	— —	28.70 729	28.70 729	28.70 729	33.15 842	33.15 842	33.15 842	36.46 926	36.46 926
	CD	— —	— —	12.28 312	12.28 312	12.28 312	15.24 387	15.24 387	15.24 387	17.48 444	17.48 444

VARIGEAR® VZ									
Model		**VZ11**	**VZ21**	**VZ31**			**VZ41**		
		DT90	**DT100**	**DT100**	**DV112M**	**DV132S**	**DV132M**	**DV132ML**	**DV160M**
FA77	**C**	23.74 603	26.50 673	27.80 706	29.29 744	31.06 789	32.83 834	35.20 894	35.20 894
	CD	8.90 226	10.67 271	12.68 322	12.68 322	12.68 322	15.63 397	15.63 397	15.63 397
FA87	**C**	— —	27.56 700	28.82 732	30.31 770	32.09 815	33.86 860	36.22 920	36.22 920
	CD	— —	10.51 267	12.48 317	12.48 317	12.48 317	15.43 392	15.43 392	15.43 392
FA97	**C**	— —	— —	30.59 777	32.09 815	33.86 860	35.63 905	37.99 965	37.99 965
	CD	— —	— —	12.28 312	12.28 312	12.28 312	15.24 387	15.24 387	15.24 387

Motor										
	VU/VZ11	**VU/VZ21**	**VU/VZ31**			**VU/VZ41**			**VU51**	
	DT90	**DT100**	**DT100**	**DV112M**	**DV132S**	**DV132M**	**DV132ML**	**DV160M**	**DV160L**	**DV180**
AB	6.73 171	6.89 175	6.89 175	7.40 188	7.40 188	9.13 232	9.13 232	9.13 232	10.04 255	10.55 268
L	10.75 273	12.24 311	12.24 311	13.74 349	15.51 394	15.83 402	18.19 462	18.19 462	19.80 503	22.64 575
P	7.76 197	7.76 197	7.76 197	8.70 221	8.70 221	10.83 275	10.83 275	10.83 275	13.03 331	13.03 331

Dimension AB is to motor conduit box
Eye bolts are removable
Size VU6 is supplied with windless-type control
See page 60 for VARIGEAR® configuration options.
See page 237 for available output shaft options.

VU

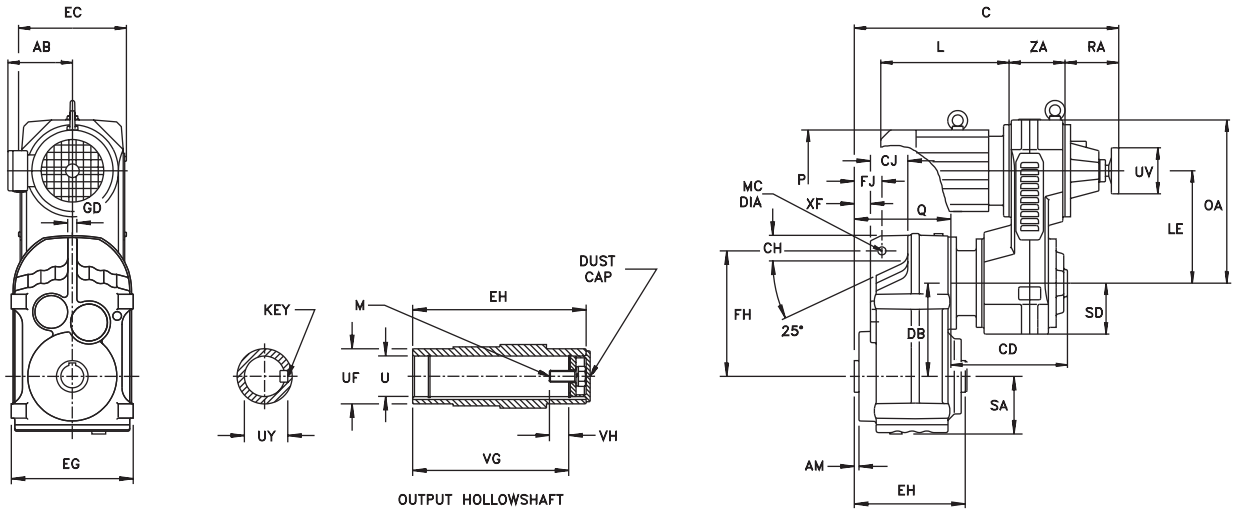

VZ

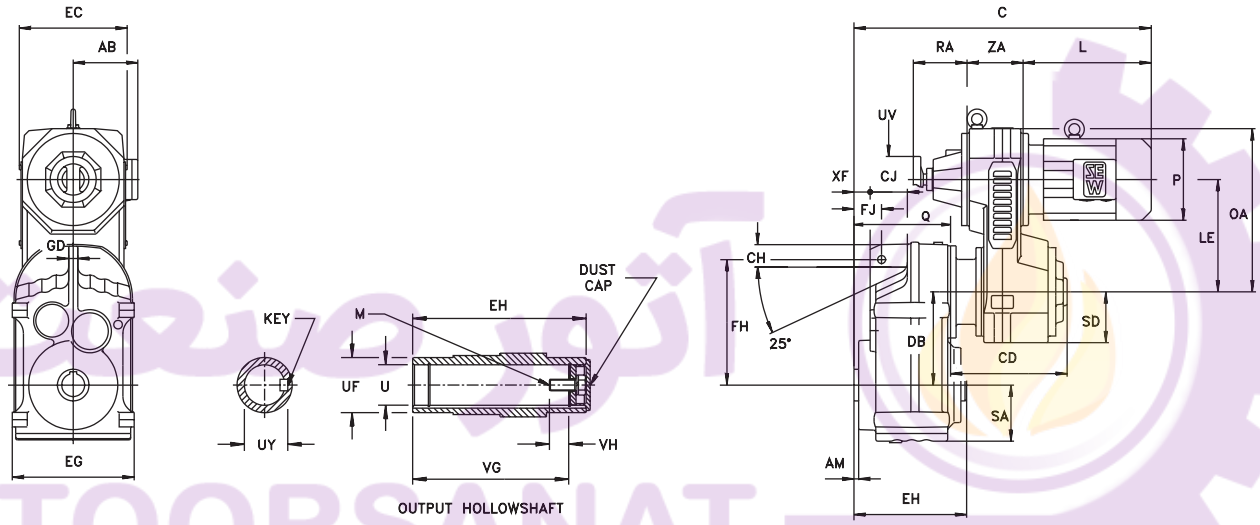

آتور صنعت
ATOORSANAT

Dimensions are inch / mm

Gearcase												
Model	**AM**	**CH**	**CJ**	**DB**	**EG**	**FH**	**FJ**	**GD**	**MC**	**Q**	**SA**	**XF**
FA107	0.10 2.5	4.25 108	3.94 100	13.09 332.4	17.72 450	19.09 485	3.46 88	1.42 36	1.02 26	12.28 312	7.87 200	2.24 57
FA127	0.10 2.5	5.43 138	4.92 125	15.06 382.6	20.87 530	21.65 550	4.33 110	1.57 40	1.30 33	14.69 373	9.29 236	2.60 66
FA157	0.28 7	6.69 170	5.51 140	17.60 447	25.98 660	25.98 660	5.91 150	1.77 45	1.30 33	17.91 455	11.26 286	3.86 98

Output Shaft								
Model	**EH**	**U***	**UF**	**UY**	**VG**	**VH**	**Key**	**M**
FA107	13.78 350	3.625 90	4.65 118	3.89 95.4	12.32 313	1.24 40	7/8 × 5/8 × 3 1/2 25 x 14 x 160	3/4 – 10 × 2 M24 x 60
FA127	16.14 410	4.000 100	5.31 135	4.44 106.4	14.69 373	1.26 38	1× 1× 6 28 x 16 x 180	1– 8 × 2 1/4 M24 x 60
FA157	19.69 500	4.500 120	6.10 155	4.95 127.4	18.11 460	1.26 36	1× 1× 6 32 x 18 x 200	1– 8 × 2 1/4 M24 x 60

*** Note: See page 18 for tolerances.**

Dimensions subject to change without notice.

آتور صنعت ATOORSANAT
SEW EURODRIVE

VARIGEAR®							
Model	**EC**	**LE**	**OA**	**RA**	**SD**	**UV**	**ZA**
VU/VZ41	13.70 348	14.96 380	21.77 553	7.44 189	6.69 170	7.87 200	7.09 180
VU51	15.67 398	18.11 460	25.91 658	8.66 220	7.68 195	7.87 200	7.87 200
VU6	18.94 481	22.60 574	31.69 805	6.10 155	9.65 245	15.16 385	8.43 214

VARIGEAR® VU									
Model		**VU41**			**VU51**		**VU6**		
		DV132M	**DV132ML**	**DV160M**	**DV160L**	**DV180**	**DV180**	**DV200**	**DV225**
FA107	**C**	34.41 874	34.41 874	34.41 874	37.72 958	37.72 958	40.04 1017	40.04 1017	40.04 1017
	CD	15.00 381	15.00 381	15.00 381	17.24 438	17.24 438	26.06 662	26.06 662	26.06 662
FA127	**C**	— —	— —	— —	39.53 1004	39.53 1004	41.85 1063	41.85 1063	41.85 1063
	CD	— —	— —	— —	16.65 423	16.65 423	25.47 647	25.47 647	25.47 647
FA157	**C**	— —	— —	— —	— —	— —	46.06 1170	46.06 1170	46.06 1170
	CD	— —	— —	— —	— —	— —	25.16 639	25.16 639	25.16 639

VARIGEAR® VZ				
Model		**VZ41**		
		DV132M	**DV132ML**	**DV160M**
FA107	**C**	36.89 937	39.25 997	39.25 997
	CD	15.00 381	15.00 381	15.00 381

Motor								
	VU/VZ41			**VU51**		**VU6**		
	DV132M	**DV132ML**	**DV160M**	**DV160L**	**DV180**	**DV180**	**DV200**	**DV225**
AB	9.13 232	9.13 232	9.13 232	10.04 255	10.55 268	10.55 268	11.81 300	11.97 304
L	15.83 402	18.19 462	18.19 462	19.80 503	22.64 575	22.64 575	24.53 623	28.54 725
P	10.83 275	10.83 275	10.83 275	13.03 331	13.03 331	13.03 331	15.51 394	15.51 394

Dimension AB is to motor conduit box
Eye bolts are removable
Size VU6 is supplied with windless-type control
See page 60 for VARIGEAR® configuration options.
See page 237 for available output shaft options.

2. Shaft Mounted with Feet

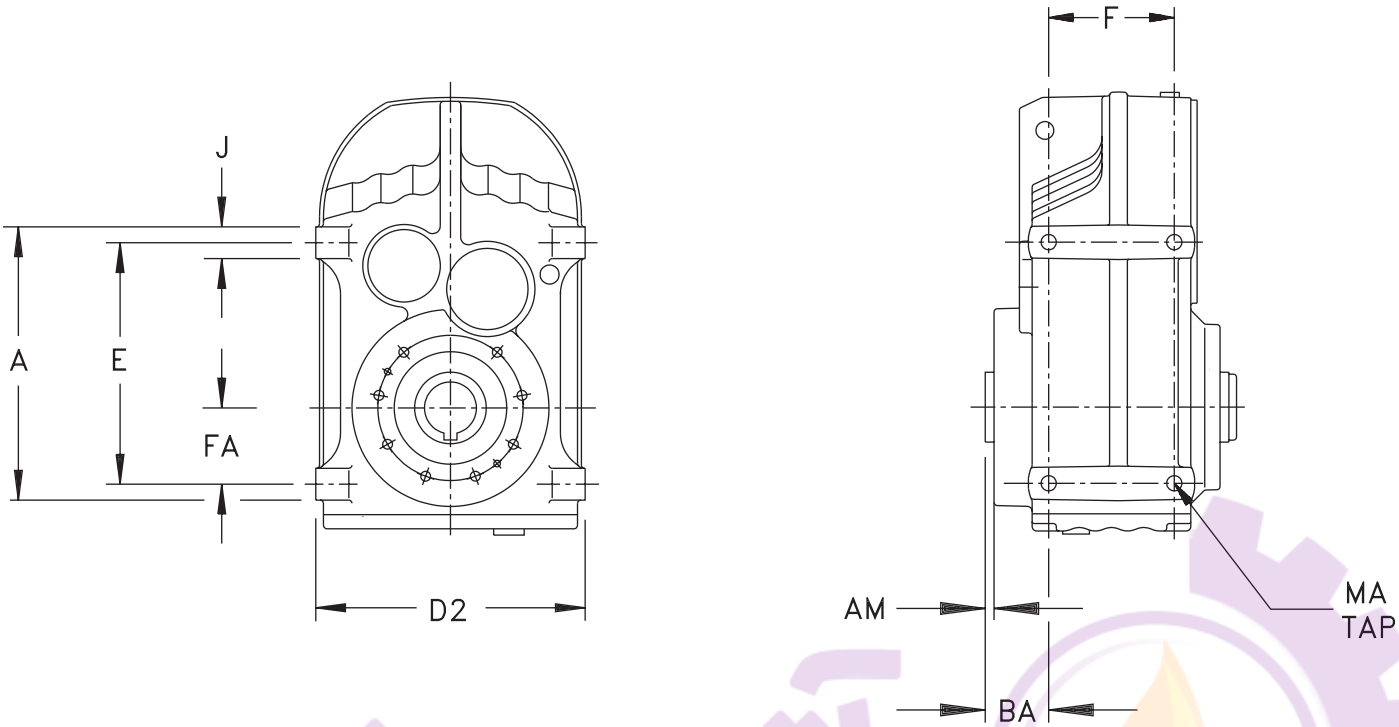

Dimensions are inch / mm

Model	A	AM	BA	D2	E	F	FA	J	MA
FA37B..	5.31 135	0.10 2.5	0.89 22.5	6.50 165	4.53 115	3.03 77	1.22 31	0.79 20	M8 x .43 M8 x 11
FA47B..	6.50 165	0.12 3	1.22 31	7.09 180	5.71 145	3.66 93	1.69 43	0.79 20	M10 x .59 M10 x 15
FA57B..	7.68 195	0.12 3	1.32 33.5	7.87 200	6.69 170	4.02 102	2.17 55	0.98 25	M12 x .67 M12 x 17
FA67B..	8.46 215	0.14 3.5	1.46 37	8.35 212	7.48 190	4.41 112	2.36 60	0.98 25	M12 x .67 M12 x 17
FA77B..	10.83 275	0.16 4	1.44 36.5	10.63 270	9.45 240	5.51 140	2.76 70	1.38 35	M16 x 1.02 M16 x 26
FA87B..	13.78 350	0.16 4	1.69 43	12.99 330	12.20 310	6.50 165	3.94 100	1.57 40	M16 x 1.02 M16 x 26
FA97B..	15.75 400	0.16 4	1.91 48.5	15.75 400	13.78 350	8.07 205	4.72 120	1.97 50	M20 x 1.10 M20 x 28
FA107B..	18.11 460	0.10 2.5	2.74 69.5	17.72 450	15.75 400	8.66 220	4.92 125	2.36 60	M24 x 1.42 M24 x 36
FA127B..	20.47 520	0.10 2.5	3.12 79.25	20.87 530	17.72 450	10.63 270	5.59 142	2.76 70	M30 x 1.77 M30 x 45
FA157B..	24.41 620	0.28 7	4.65 118	25.98 660	21.26 540	12.20 310	6.69 170	3.15 80	M36 x 2.17 M36 x 55

Consult appropriate VARIGEAR® with the Snuggler® dimension pages for additional dimensions

Dimensions subject to change without notice.

آتور صنعت ATOORSANAT
SEW EURODRIVE

3.Shrink Disc Mounted

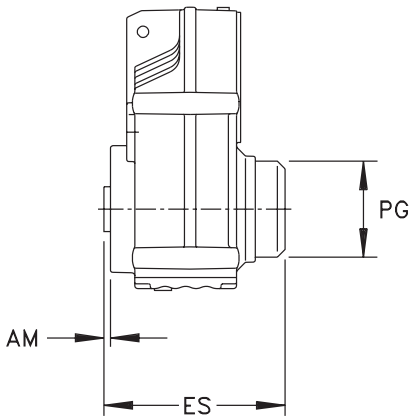

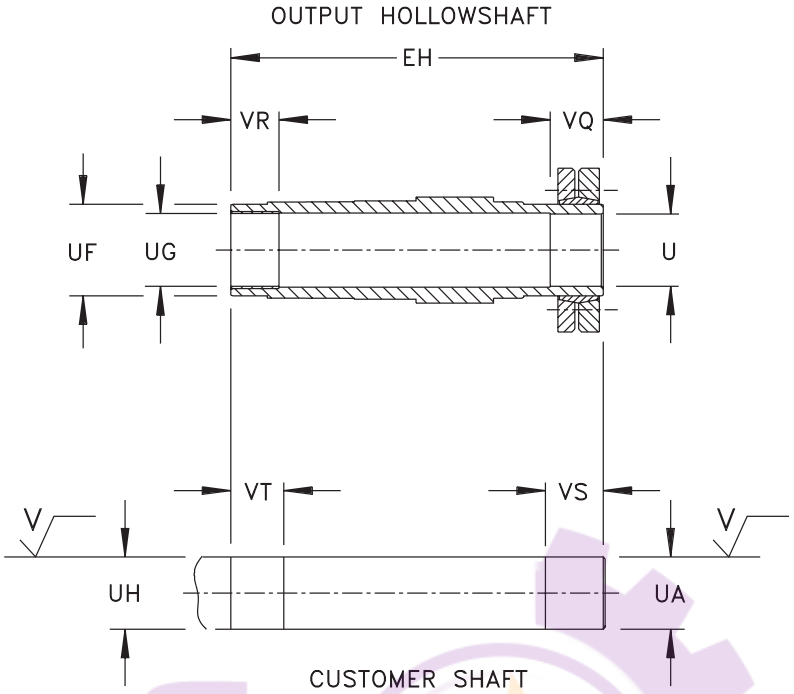

$$\sqrt{V} = \sqrt[125]{\mu in\ R_a} = \sqrt[3.2]{\mu m\ R_a}$$

Dimensions are inch / mm

Model	Gearcase			Shrink Disc										
	AM	ES	PG	EH	U[1)] *	UA[1)] *	UF	UG[1)] *	UH[1)] *	VR	VQ	VS	VT	Ma[2)]
FH37..	0.02 0.5	6.18 157	3.07 78	5.75 146	— 30	— 30	1.77 45	— 30	— 30	0.79 20	1.22 31	1.42 36	0.98 25	5130
FH47..	0.04 1	7.42 188.5	3.46 88	6.97 177	— 35	— 35	1.97 50	— 35	— 35	0.79 20	1.26 32	1.46 37	0.98 25	8410
FH57..	0.04 1	8.72 221.5	3.94 100	7.68 195	— 40	— 40	2.17 55	— 40	— 40	0.79 20	1.02 26	1.22 31	0.98 25	14600
FH67..	0.04 1	8.72 221.5	3.94 100	8.19 208	— 40	— 40	2.17 55	— 40	— 40	0.79 20	1.50 38	1.69 43	0.98 25	14600
FH77..	0.04 1	10.04 255	4.76 121	9.49 241	— 50	— 50	2.76 70	— 50	— 50	1.18 30	1.42 36	1.61 41	1.38 35	28300
FH87..	0.04 1	11.61 295	6.46 164	11.06 281	— 65	— 65	3.35 85	— 65	— 65	1.57 40	1.61 41	1.81 46	1.77 45	53100
FH97..	0.04 1	14.19 360.5	7.28 185	13.58 345	— 75	— 75	3.74 95	— 75	— 75	1.97 50	2.17 55	2.36 60	2.17 55	79700
FH107..	0.10 2.5	16.54 420	7.87 200	15.94 405	— 95	— 95	4.65 118	— 95	— 95	2.36 60	2.56 65	2.95 75	2.76 70	132800
FH127..	0.10 2.5	19.72 501	9.17 233	19.09 485	— 105	— 105	5.31 135	— 105	— 105	2.76 70	3.35 85	3.74 95	3.15 80	241600
FH157..	0.28 7	23.54 598	10.83 275	22.83 580	— 125	— 125	6.10 155	— 125	— 125	3.15 80	3.54 90	3.94 100	3.54 90	395900

Consult appropriate VARIGEAR® with the Snuggler® dimension page for additional dimensions

1) Previous FA../S gear units (i.e. FA60) had different values

2) Maximum transmissible torque, in lb-in, of the shrink disc

*** Note: See page 18 for tolerances.**

4. Shrink Disc Mounted with Feet

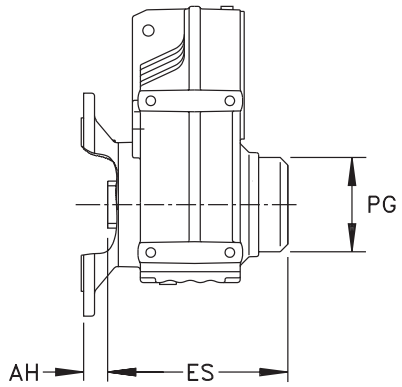

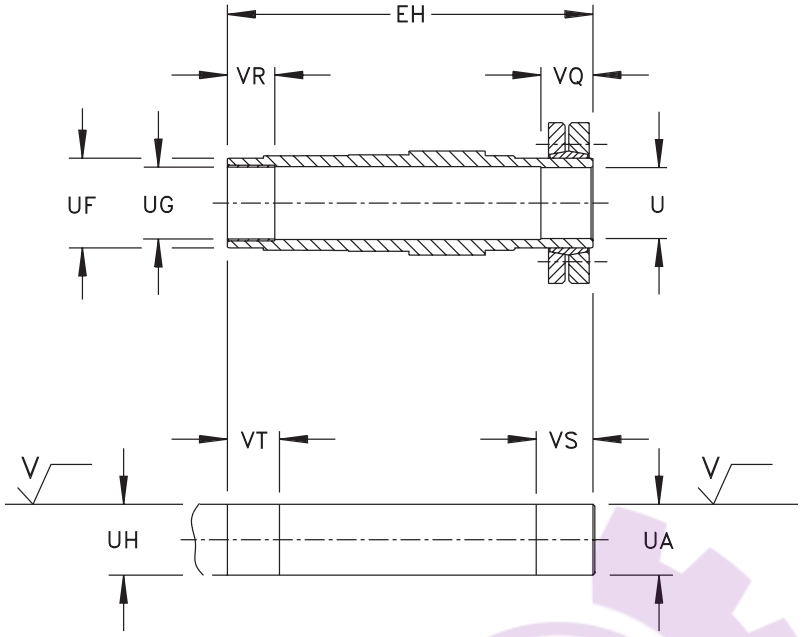

$$\sqrt{V} = \sqrt[125]{\mu in \ R_a} = \sqrt[3.2]{\mu m \ R_a}$$

Dimensions are inch / mm

Model	Gearcase					Shrink Disc										
	AM	BA	ES	MA	PG	EH	U[1)] *	UA[1)] *	UF	UG[1)] *	UH[1)] *	VR	VQ	VS	VT	M_a[2)]
FH37B..	0.10 2.5	0.89 22.5	6.18 157	M8 x .43 M8 x 11	3.07 78	5.75 146	— 30	— 30	1.77 45	— 30	— 30	0.79 20	1.22 31	1.42 36	0.98 25	5130
FH47B..	0.12 3	1.22 31	7.42 188.5	M10 x .59 M10 x 15	3.46 88	6.97 177	— 35	— 35	1.97 50	— 35	— 35	0.79 20	1.26 32	1.46 37	0.98 25	8410
FH57B..	0.12 3	1.32 33.5	8.72 221.5	M12 x .67 M12 x 17	3.94 100	7.68 195	— 40	— 40	2.17 55	— 40	— 40	0.79 20	1.02 26	1.22 31	0.98 25	14600
FH67B..	0.14 3.5	1.46 37	8.72 221.5	M12 x .67 M12 x 17	3.94 100	8.19 208	— 40	— 40	2.17 55	— 40	— 40	0.79 20	1.50 38	1.69 43	0.98 25	14600
FH77B..	0.16 4	1.44 36.5	10.04 255	M16 x 1.02 M16 x 26	4.76 121	9.49 241	— 50	— 50	2.76 70	— 50	— 50	1.18 30	1.42 36	1.61 41	1.38 35	28300
FH87B..	0.16 4	1.69 43	11.61 295	M16 x 1.02 M16 x 26	6.46 164	11.06 281	— 65	— 65	3.35 85	— 65	— 65	1.57 40	1.61 41	1.81 46	1.77 45	53100
FH97B..	0.16 4	1.91 48.5	14.19 360.5	M20 x 1.10 M20 x 28	7.28 185	13.58 345	— 75	— 75	3.74 95	— 75	— 75	1.97 50	2.17 55	2.36 60	2.17 55	79700
FH107B..	0.10 2.5	2.74 69.5	16.54 420	M24 x 1.42 M24 x 36	7.87 200	15.94 405	— 95	— 95	4.65 118	— 95	— 95	2.36 60	2.56 65	2.95 75	2.76 70	132800
FH127B..	0.10 2.5	3.12 79.25	19.72 501	M30 x 1.77 M30 x 45	9.17 233	19.09 485	— 105	— 105	5.31 135	— 105	— 105	2.76 70	3.35 85	3.74 95	3.15 80	241600
FH157B..	0.28 7	4.65 118	23.54 598	M36 x 2.17 M36 x 55	10.83 275	22.83 580	— 125	— 125	6.10 155	— 125	— 125	3.15 80	3.54 90	3.94 100	3.54 90	395900

Consult appropriate VARIGEAR® with the Snuggler® dimension pages for additional dimensions

1) Previous FA../S gear units (i.e. FA60) had different values

2) Maximum transmissible torque, in lb-in, of the shrink disc

*** Note: See page 18 for tolerances.**

Dimensions subject to change without notice.

آتور صنعت ATOORSANAT SEW EURODRIVE

5. Flange Mounted with Shrink Disc

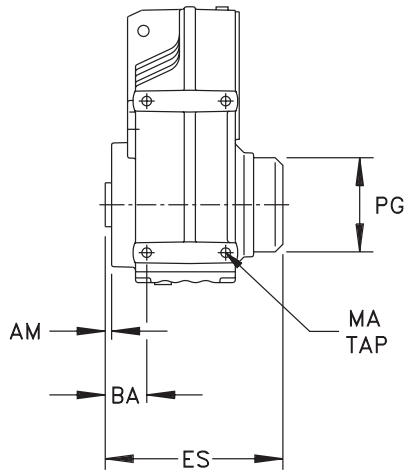

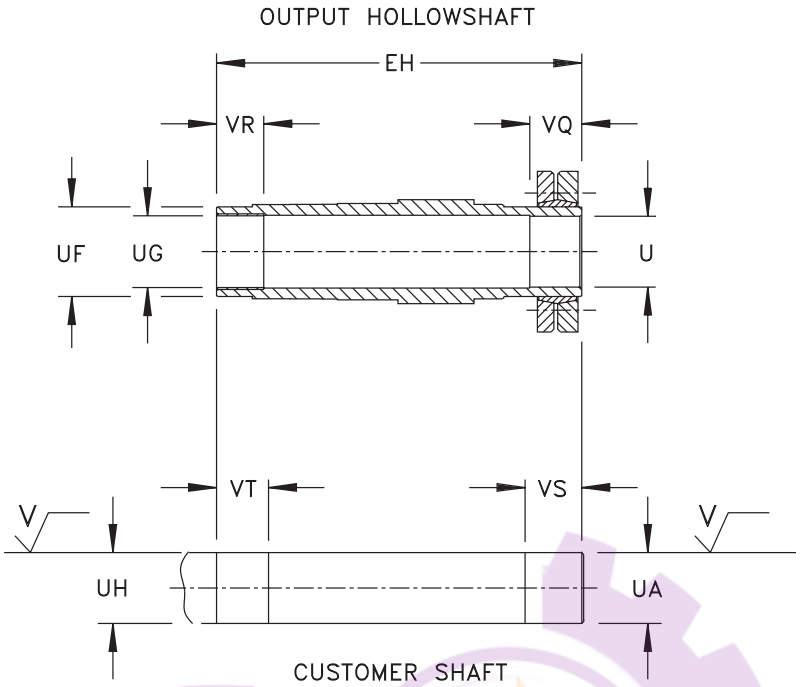

$$\sqrt{V} = \sqrt[125]{\mu in \ R_a} = \sqrt[3.2]{\mu m \ R_a}$$

Dimensions are $\frac{\text{inch}}{\text{mm}}$

Model	Gearcase			Shrink Disc										
	AM	ES	PG	EH	U[1)] *	UA[1)] *	UF	UG[1)] *	UH[1)] *	VR	VQ	VS	VT	M_a [2)]
FHF37..	0.94 24	6.18 157	3.07 78	5.75 146	— 30	— 30	1.77 45	— 30	— 30	0.79 20	1.22 31	1.42 36	0.98 25	5130
FHF47..	0.98 25	7.42 188.5	3.46 88	6.97 177	— 35	— 35	1.97 50	— 35	— 35	0.79 20	1.26 32	1.46 37	0.98 25	8410
FHF57..	0.91 23	8.72 221.5	3.94 100	7.68 195	— 40	— 40	2.17 55	— 40	— 40	0.79 20	1.02 26	1.22 31	0.98 25	14600
FHF67..	0.91 23	8.72 221.5	3.94 100	8.19 208	— 40	— 40	2.17 55	— 40	— 40	0.79 20	1.50 38	1.69 43	0.98 25	14600
FHF77..	1.46 37	10.04 255	4.76 121	9.49 241	— 50	— 50	2.76 70	— 50	— 50	1.18 30	1.42 36	1.61 41	1.38 35	28300
FHF87..	1.18 30	11.61 295	6.46 164	11.06 281	— 65	— 65	3.35 85	— 65	— 65	1.57 40	1.61 41	1.81 46	1.77 45	53100
FHF97..	1.63 41.5	14.19 360.5	7.28 185	13.58 345	— 75	— 75	3.74 95	— 75	— 75	1.97 50	2.17 55	2.36 60	2.17 55	79700
FHF107..	1.61 41	16.54 420	7.87 200	15.94 405	— 95	— 95	4.65 118	— 95	— 95	2.36 60	2.56 65	2.95 75	2.76 70	132800
FHF127..	2.01 51	19.72 501	9.17 233	19.09 485	— 105	— 105	5.31 135	— 105	— 105	2.76 70	3.35 85	3.74 95	3.15 80	241600
FHF157..	2.36 60	23.54 598	10.83 275	22.83 580	— 125	— 125	6.10 155	— 125	— 125	3.15 80	3.54 90	3.94 100	3.54 90	395900

Consult appropriate VARIGEAR® with the Snuggler® dimension pages for additional dimensions

[1)] Previous FAF../S gear units (i.e. FAF60) had different values

[2)] Maximum transmissible torque, in lb-in, of the shrink disc

*** Note: See page 18 for tolerances.**

6. Face Mounted with Shrink Disc

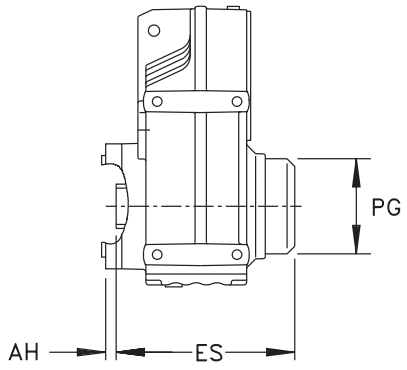

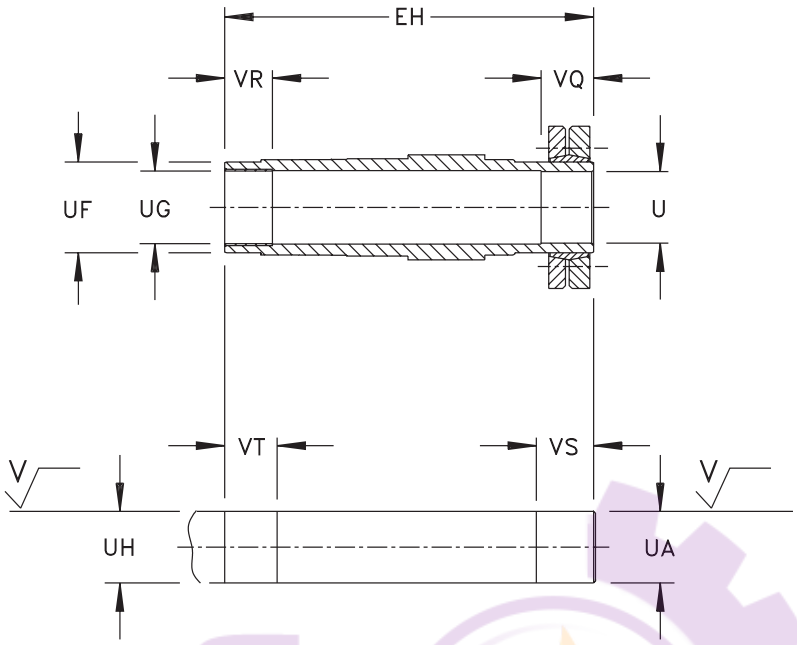

$$\sqrt{V} = \sqrt[125]{\mu in\ R_a} = \sqrt[3.2]{\mu m\ R_a}$$

Dimensions are inch / mm

Model	Gearcase			Shrink Disc										
	AM	ES	PG	EH	U *	UA *	UF	UG *	UH *	VR	VQ	VS	VT	M_a 1)
FHZ37..	0.35 9	6.18 157	3.07 78	5.75 146	— 30	— 30	1.77 45	— 30	— 30	0.79 20	1.22 31	1.42 36	0.98 25	5130
FHZ47..	0.31 8	7.42 188.5	3.46 88	6.97 177	— 35	— 35	1.97 50	— 35	— 35	0.79 20	1.26 32	1.46 37	0.98 25	8410
FHZ57..	0.35 9	8.72 221.5	3.94 100	7.68 195	— 40	— 40	2.17 55	— 40	— 40	0.79 20	1.02 26	1.22 31	0.98 25	14600
FHZ67..	0.33 8.5	8.72 221.5	3.94 100	8.19 208	— 40	— 40	2.17 55	— 40	— 40	0.79 20	1.50 38	1.69 43	0.98 25	14600
FHZ77..	0.39 10	10.04 255	4.76 121	9.49 241	— 50	— 50	2.76 70	— 50	— 50	1.18 30	1.42 36	1.61 41	1.38 35	28300
FHZ87..	0.43 11	11.61 295	6.46 164	11.06 281	— 65	— 65	3.35 85	— 65	— 65	1.57 40	1.61 41	1.81 46	1.77 45	53100
FHZ97..	0.55 14	14.19 360.5	7.28 185	13.58 345	— 75	— 75	3.74 95	— 75	— 75	1.97 50	2.17 55	2.36 60	2.17 55	79700
FHZ107..	-0.31 -8	16.54 420	7.87 200	15.94 405	— 95	— 95	4.65 118	— 95	— 95	2.36 60	2.56 65	2.95 75	2.76 70	132800
FHZ127..	0 0	19.72 501	9.17 233	19.09 485	— 105	— 105	5.31 135	— 105	— 105	2.76 70	3.35 85	3.74 95	3.15 80	241600
FHZ157..	0.51 13	23.54 598	10.83 275	22.83 580	— 125	— 125	6.10 155	— 125	— 125	3.15 80	3.54 90	3.94 100	3.54 90	395900

Consult appropriate VARIGEAR® with the Snuggler® dimension pages for additional dimensions

1) Maximum transmissible torque, in lb-in, of the shrink disc

*** Note: See page 18 for tolerances.**

Dimensions subject to change without notice.

آتور صنعت ATOORSANAT SEW EURODRIVE

7. Available Output Solid Shafts

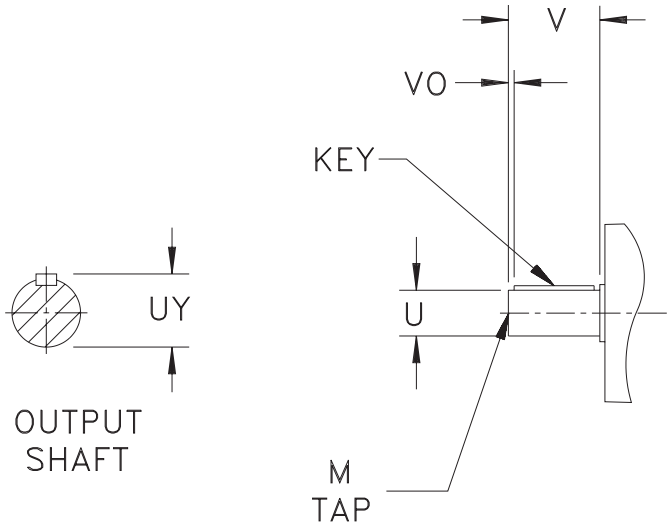

Model	Inch Shafts						Dimensions are inch
	U *	UY	V	VO	Key	M	Change in length[2]
F/FF37	1.000	1.11	1.97	0.32	1/4 x 1/4 x 1 5/16	3/8 - 16 x .87	0
F/FF47	1.250	1.36	2.36	0.26	1/4 x 1/4 x 1 11/16	1/2 - 13 x 1.12	0
F/FF57	1.375	1.51	2.76	0.43	5/16 x 5/16 x 1 13/16	1/2 - 13 x 1.12	0
F/FF67	1.625	1.79	3.15	0.38	3/8 x 3/8 x 2 1/4	5/8 - 11 x 1.38	0
	1.375[1]	1.51	2.76	0.47	5/16 x 5/16 x 1 13/16	1/2 - 13 x 1.12	-0.39
F/FF77	2.000	2.22	3.94	0.64	1/2 x 1/2 x 2 5/8	3/4 - 10 x 1.61	0
	1.750[1]	1.92	3.54	0.40	3/8 x 3/8 x 2 3/4	5/8 - 11 x 1.38	-0.39
F/FF87	2.375	2.65	4.72	0.51	5/8 x 5/8 x 3 5/8	3/4 - 10 x 1.61	0
F/FF97	2.875	3.20	5.51	0.67	3/4 x 3/4 x 4 1/8	3/4 - 10 x 1.61	0
F/FF107	3.625	4.01	6.69	0.63	7/8 x 7/8 x 5 3/8	1 - 8 x 2.13	0
F/FF127	4.375	4.82	8.27	1.09	1 x 1 x 6	1 - 8 x 2.13	0
F/FF157	4.750	5.29	8.27	0.82	1 1/4 x 1 1/4 x 6 9/16	1 - 8 x 2.13	0

Model	Metric Shafts						Dimensions are mm
	U *	UY	V	VO	Key	M	Change in length[2]
F/FF37	25	28	50	5	8 x 7 x 40	M10 x 22	0
F/FF47	30	33	60	3.5	8 x 7 x 50	M10 x 22	0
F/FF57	35	38	70	7	10 x 8 x 56	M12 x 28	0
F/FF67	40	43	80	5	12 x 8 x 70	M16 x 36	0
	35[1]	38	70	7	10 x 8 x 56	M12 x 28	-10
F/FF77	50	53.5	100	10	14 x 9 x 80	M16 x 36	0
	45[1]	48.5	90	5	14 x 9 x 80	M16 x 36	-10
F/FF87	60	64	120	5	18 x 11 x 110	M20 x 42	0
F/FF97	70	74.5	140	7.5	20 x 12 x 125	M20 x 42	0
F/FF107	90	95	170	5	25 x 14 x 160	M24 x 50	0
F/FF127	110	116	210	15	28 x 16 x 180	M24 x 50	0
F/FF157	120	127	210	5	32 x 18 x 200	M24 x 50	0

[1] Indicated shaft diameter reduces the gearbox torque rating - contact SEW-Eurodrive for details.
[2] When compared to standard shaft as shown in dimension pages.

*** Note: See page 18 for tolerances.**

Dimensions subject to change without notice.

8. Available Output Hollowshafts

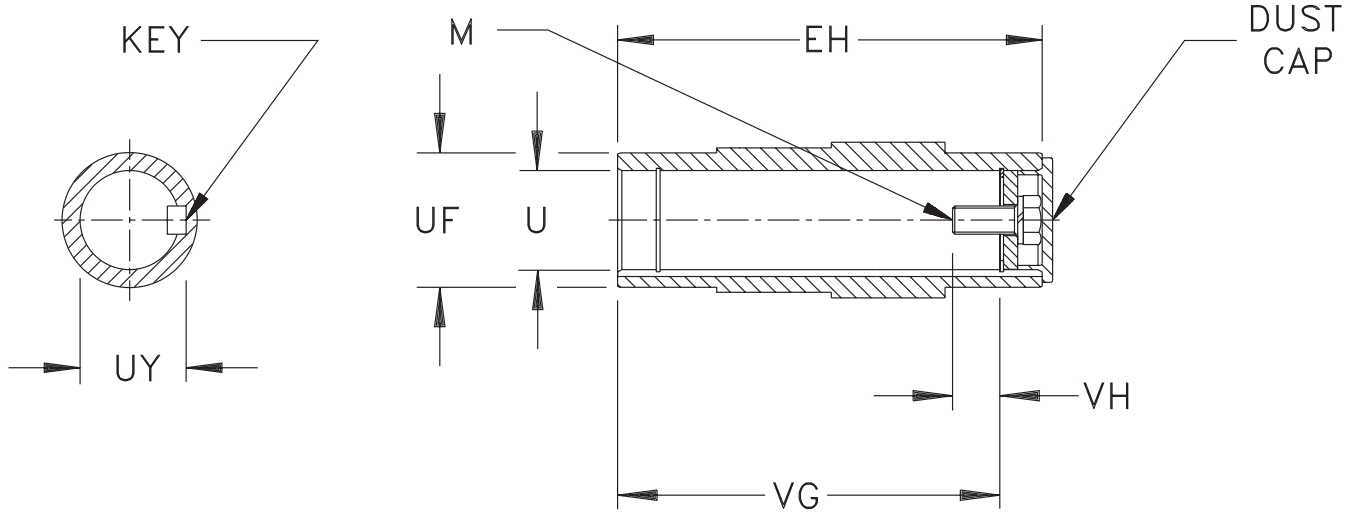

OUTPUT HOLLOWSHAFT

Model	Inch Shafts							Dimensions are inch
	EH	U *	UF	UY	VG	VH	Key	M
FA/FAF/FAZ37	4.72	1.250	1.77	1.37	4.13	0.67	1/4 × 1/4 x 1 11/16	7/16 - 14 x 1
FA/FAF/FAZ47	5.91	1.375	1.97	1.52	5.20	0.65	5/16 x 5/16 x 1 13/16	1/2 - 13 x 1
	5.91	1.250	1.97	1.37	5.20	0.67	1/4 x 1/4 x 1 11/16	7/16 - 14 x 1
FA/FAF/FAZ57	6.54	1.500	2.17	1.67	5.59	1.36	3/8 x 3/8 x 2 1/4	5/8 - 11 x 1 3/4
FA/FAF/FAZ67	7.09	1.500	2.17	1.67	6.14	1.36	3/8 x 3/8 x 2 1/4	5/8 - 11 x 1 3/4
	7.09	1.4375[1)]	2.17	1.61	6.14	1.36	3/8 x 3/8 x 2 1/4	5/8 - 11 x 1 3/4
FA/FAF/FAZ77	8.27	2.000	2.76	2.22	7.20	1.16	1/2 x 1/2 x 2 5/8	5/8 - 11 x 1 3/4
	8.27	1.9375[1)]	2.76	2.16	7.20	1.16	1/2 x 1/2 x 2 5/8	5/8 - 11 x 1 3/4
FA/FAF/FAZ87	9.45	2.375	3.35	2.65	8.27	1.39	5/8 x 5/8 x 3 5/8	3/4 - 10 x 2
	9.45	2.4375[1)]	3.35	2.62	8.27	1.39	5/8 x 7/16 x 3	3/4 - 10 x 2
FA/FAF/FAZ97	11.81	2.750	3.74	3.03	10.63	1.24	5/8 x 5/8 x 3 5/8	3/4 - 10 x 2
	11.81	2.9375[1)]	3.74	3.14	10.63	1.24	3/4 x 1/2 x 3 1/2	3/4 - 10 x 2
FA/FAF/FAZ107	13.78	3.625	4.65	3.89	12.32	1.24	7/8 x 5/8 x 3 1/2	3/4 - 10 x 2
	13.78	3.250	4.65	3.59	12.32	1.24	3/4 x 3/4 x 4 1/8	3/4 - 10 x 2
	13.78	3.4375[1)]	4.65	3.70	12.32	1.24	7/8 x 5/8 x 3 1/2	3/4 - 10 x 2
FA/FAF/FAZ127	16.14	4.000	5.31	4.44	14.69	1.26	1 x 1 x 6	1 - 8 x 2 1/4
FA/FAF/FAZ157	19.69	4.500	6.10	4.95	18.11	1.26	1 x 1 x 6	1 - 8 x 2 1/4

Model	Metric Shafts							Dimensions are mm
	EH	U *	UF	UY	VG	VH	Key	M
FA/FAF/FAZ37	120	30	45	33.3	105	17	8 x 7 x 40	M10 x 25
FA/FAF/FAZ47	150	35	50	38.3	132	22	10 x 8 x 45	M12 x 30
	150	30	50	33.3	132	16	8 x 7 x 40	M10 x 25
FA/FAF/FAZ57	166	40	55	43.3	142	29	12 x 8 x 50	M16 x 40
FA/FAF/FAZ67	180	40	55	43.3	156	29	12 x 8 x 50	M16 x 40
FA/FAF/FAZ77	210	50	70	53.8	183	32	14 x 9 x 80	M16 x 45
FA/FAF/FAZ87	240	60	85	64.4	210	36	18 x 11 x 100	M20 x 50
FA/FAF/FAZ97	300	70	95	74.9	270	34	20 x 12 x 110	M20 x 50
FA/FAF/FAZ107	350	90	118	95.4	313	40	25 x 14 x 160	M24 x 60
	350	80	118	85.4	313	30	22 x 14 x 125	M20 x 50
FA/FAF/FAZ127	410	100	135	106.4	373	38	28 x 16 x 180	M24 x 60
FA/FAF/FAZ157	500	120	155	127.4	460	36	32 x 18 x 200	M24 x 60

*** Note: See page 18 for tolerances.**

Dimensions subject to change without notice.

آتور صنعت ATOORSANAT SEW EURODRIVE

9.Torque Arm Arrangement

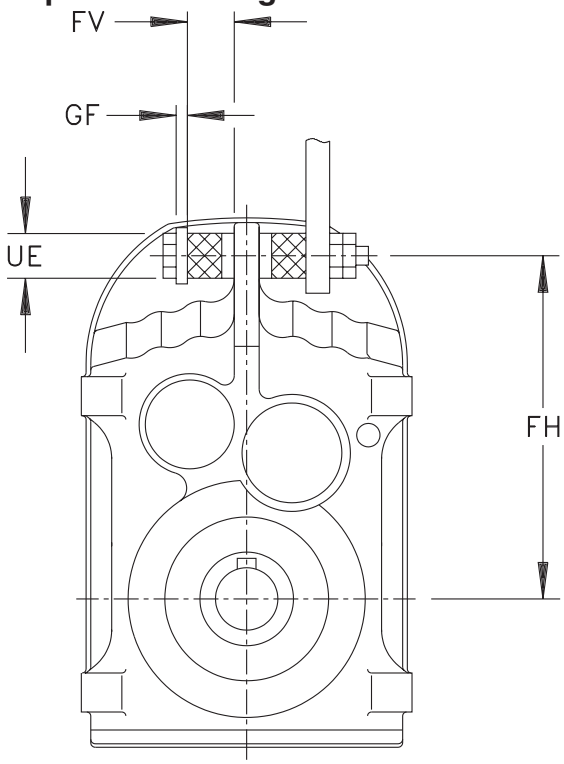

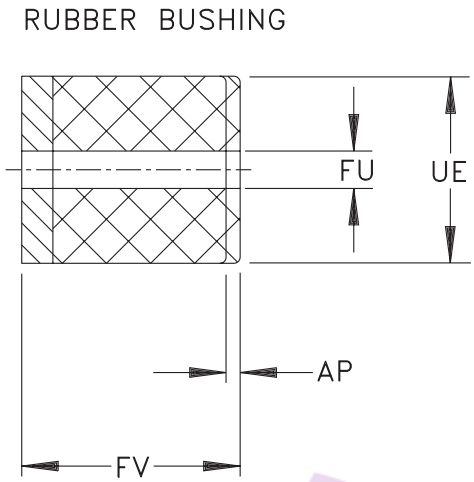

Dimensions are $\frac{\text{inch}}{\text{mm}}$

Model	AP[1)]	FH	FU	FV	GF_{min}	UE[2)]	Rubber Bushing Part Number
FA37	0.04 1.0	6.22 158	0.49 12.50	0.79 20	0.20 5	1.57 40	013 348 5
FA47	0.07 1.8	6.69 170	0.49 12.50	0.79 20	0.20 5	1.57 40	013 348 5
FA57	0.09 2.4	7.80 198	0.49 12.50	0.79 20	0.20 5	1.57 40	013 348 5
FA67	0.12 3.0	8.58 218	0.49 12.50	0.79 20	0.20 5	1.57 40	013 348 5
FA77	0.13 3.2	10.94 278	0.83 21	1.18 30	0.39 10	2.36 60	013 349 3
FA87	0.18 4.5	13.62 346	0.83 21	1.18 30	0.39 10	2.36 60	013 349 3
FA97	0.20 5	15.55 3.95	0.98 25	1.57 40	0.47 12	3.15 80	013 350 7
FA107	0.24 6	19.09 485	0.98 25	1.57 40	0.47 12	3.15 80	013 350 7
FA127	0.35 9	21.65 550	1.26 32	2.36 60	0.59 15	3.94 100	013 351 5
FA157	0.35 9	25.98 660	1.26 32	2.36 60	0.59 15	3.94 100	013 347 7

Each gear unit is supplied with two resilient bushings.
Consult appropriate VARIGEAR® with the Snuggler® dimension pages for additional dimensions
1) Approximate compression at $T_{a\,max}$
2) Outside diameter of the resilient bushing in the uncompressed state.
inch tolerance is -.01, metric tolerance is -.02

10. Output Shaft Tap Specifications

Inch Shaft

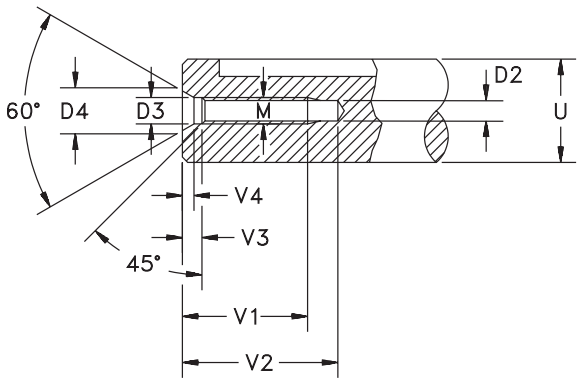

Metric Shaft

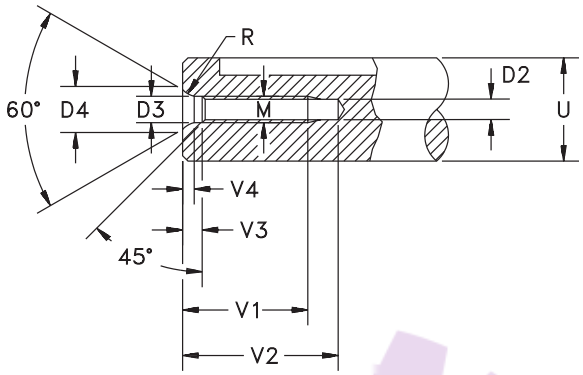

Inch Shaft									Dimensions are inch
Shaft Diameter - U		M	D2	D3	D4	V1*	V2 min.	V3**	V4 approximate
from	through[1)]								
0	13/16	1/4 - 20	0.2010	0.256	0.374	0.630	0.787	0.197	0.102
7/8	15/16	5/16 - 18	0.2570	0.327	0.472	0.866	1.102	0.236	0.126
1	1-1/8	3/8 - 16	0.3125	0.374	0.571	0.866	1.102	0.295	0.169
1-1/4	1-3/8	1/2 - 13	0.4219	0.531	0.768	1.122	1.417	0.374	0.205
1-1/2	1-7/8	5/8 - 11	0.5312	0.654	0.984	1.378	1.772	0.472	0.283
2	3-1/4	3/4 - 10	0.6562	0.795	1.181	1.614	2.047	0.591	0.335
3-3/8 and over		1 - 8	0.8750	1.000	1.457	2.126	2.677	0.709	0.394

Metric Shaft										Dimensions are mm
Shaft Diameter - U		M	D2	D3	D4	R	V1*	V2 min.	V3**	V4 approximate
from	through[1)]									
7	10	M3	2.5	3.2	5.3	4.0	9.0	12.0	2.6	1.8
10	13	M4	3.3	4.3	6.7	5.0	10.0	14.0	3.2	2.1
13	16	M5	4.2	5.3	8.1	6.3	12.5	17.0	4.0	2.4
16	21	M6	5.0	6.4	9.6	8.0	16.0	21.0	5.0	2.8
21	24	M8	6.8	8.4	12.2	10.0	19.0	25.0	6.0	3.3
24	30	M10	8.5	10.5	14.9	16.0	22.0	30.0	7.5	3.8
30	38	M12	10.2	13.0	18.1	20.0	28.0	37.0	9.5	4.4
38	50	M16	14.0	17.0	23.0	25.0	36.0	45.0	12.0	5.2
50	85	M20	17.5	21.0	28.4	31.5	42.0	53.0	15.0	6.4
85	130	M24	21.0	25.0	34.2	40.0	50.0	63.0	18.0	8.0
130 and over		M30	26.5	31.0	42.6	50.0	63.0	85.0	20.0	10.0

[1)] up to and including this diameter
***V1 inch tolerance +.079 / -0 , metric tolerance +2 / -0.**
****V3 +.039 *inch* tolerance only.**

Dimensions subject to change without notice.

آتور صنعت ATOORSANAT SEW EURODRIVE

11. Customer Solid Shaft & Assembly/Disassembly Tool

When using conventional tools to remove a shaft mounted gear unit, the dismantling forces are exerted via the reducer housing and bearings and may damage the machine's drive shaft or the gear unit. To simplify the removal from the machine's drive shaft, a tool can be made as shown. A round, keyed nut (2) is inserted into the free space between the end of the machine drive shaft and the snapring in the gear unit's hollowshaft. A removal bolt (1) is screwed into the nut and presses a disc (3) against the end face of the machine drive shaft, forcing the machine drive shaft out of the hollowshaft. Please note the securing bolt normally supplied with the gear unit's hollowshaft must be replaced with a bolt as shown and the customer solid shaft should be manufactured in accordance with the dimensions shown here.

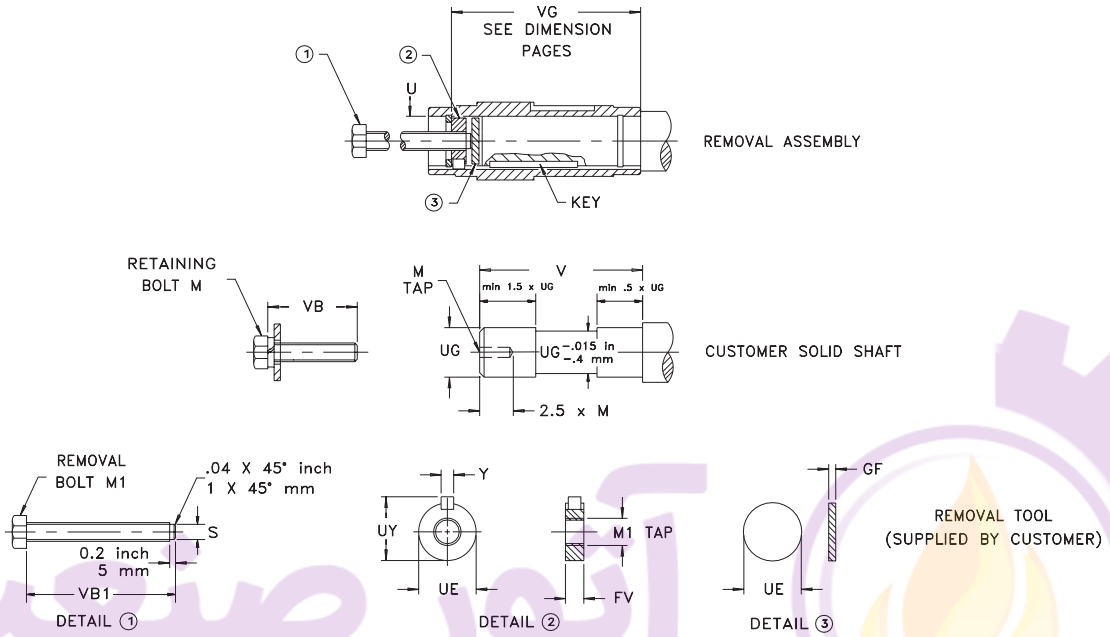

Tolerance for Shaft Diameter UG				
UG		*Load Class		
		I	II	III
Inch	1.1875 – 1.500	+0 –.0011	+.0004 –.0007	+.0007 –.0004
	2.000 – 2.938	+0 –.0009	+.0005 –.0005	+.0008 –.0001
	3.250 – 4.000	+0 –.0012	+.0005 –.0007	+.0010 –.0003
Metric (mm)	20 - 30	+0 -.013	+.009 -.004	+.015 +.002
	35 - 50	+0 -.016	+.011 -.005	+.018 +.002
	60 - 80	+0 -.019	+.012 -.007	+.021 +.002
	90 - 120	+0 -.022	+.013 -.009	+.025 +.003

*Load Class I = Uniform Load and $\frac{J_L}{J_m} \leq 0.2$

Load Class II = Moderate Shock Load and $\frac{J_L}{J_m} \leq 3.0$

Load Class III = Heavy Shock Load and $\frac{J_L}{J_m} \leq 10$

where: J_L = Load Inertia reflected to reducer input and J_m = Motor Inertia

Inch Bore Hollowshaft — Dimensions are inch

Model	FV	GF	M	M1	S	U *	UE *	UG*	UY Max.	V	VB	VB1	Y Max.
FA/FAF/FAZ37	.58	.20	7/16 – 14	5/8 – 18	.50	1.250	1.245	1.250	1.35	3.23	2.00	6.00	.250
FA/FAF/FAZ47	.59	.20	7/16 – 14	5/8 – 18	.50	1.250	1.245	1.250	1.35	4.29	2.00	6.00	.250
	.59	.20	1/2 – 13	5/8 – 18	.50	1.375	1.370	1.375	1.50	4.29	2.00	6.00	.3125
FA/FAF/FAZ57	.79	.20	5/8 – 11	1 – 14	.81	1.500	1.495	1.500	1.65	4.45	2.75	7.00	.375
FA/FAF/FAZ67	.79	.20	5/8 – 11	1 – 14	.81	1.4375	1.433	1.4375	1.59	5.00	2.75	7.00	.375
	.79	.20	5/8 – 11	1 – 14	.81	1.500	1.495	1.500	1.65	5.00	2.75	7.00	.375
FA/FAF/FAZ77	.79	.20	5/8 – 11	1 – 14	.81	1.9375	1.933	1.9375	2.14	6.06	2.75	7.00	.500
	.79	.20	5/8 – 11	1 – 14	.81	2.000	1.995	2.000	2.20	6.06	2.75	8.50	.500
FA/FAF/FAZ87	.94	.31	3/4 – 10	1 1/4 – 12	1.00	2.375	2.370	2.375	2.63	6.85	3.50	10.00	.625
	.94	.31	3/4 – 10	1 1/4 – 12	1.00	2.4375	2.433	2.438	2.60	6.85	3.50	10.00	.625
FA/FAF/FAZ97	.94	.31	3/4 – 10	1 1/4 – 12	1.00	2.750	2.745	2.750	3.01	9.21	3.50	12.50	.625
	.94	.31	3/4 – 10	1 1/4 – 12	1.00	2.9375	2.933	2.938	3.12	9.21	3.50	12.50	.750
FA/FAF/FAZ107	.94	.31	3/4 – 10	1 1/4 – 12	1.00	3.250	3.245	3.250	3.57	10.98	4.00	14.00	.750
	.94	.31	3/4 – 10	1 1/4 – 12	1.00	3.4375	3.433	3.438	3.68	10.98	4.00	14.00	.875
	.94	.31	3/4 – 10	1 1/4 – 12	1.00	3.625	3.620	3.625	3.87	10.98	4.00	14.00	.875
FA/FAF/FAZ127	1.15	.31	1 – 8	1 1/2 – 12	1.23	4.000	3.995	4.000	4.42	12.87	4.00	16.50	1.000
FA/FAF/FAZ157	1.15	.31	1 – 8	1 1/2 – 12	1.23	4.500	4.495	4.000	4.93	16.38	4.25	20.00	1.000

Metric Bore Hollowshaft — Dimensions are mm

Model	FV	GF	M	M1	S	U *	UE *	UG*	UY Max.	V	VB	VB1	Y Max.
FA/FAF/FAZ37	15	5	M10	M16 × 1	13	30	29.9	30	33	82	50	130	8
FA/FAF/FAZ47	15	5	M10	M16 × 1	13	30	29.9	30	33	109	55	160	8
	15	5	M12	M16 × 1	13	35	34.9	35	38	109	55	160	10
FA/FAF/FAZ57	20	5	M16	M24 × 1.5	20	40	39.9	40	43	113	70	190	12
FA/FAF/FAZ67	20	5	M16	M24 × 1.5	20	40	39.9	40	43	127	70	190	12
FA/FAF/FAZ77	20	5	M16	M24 × 1.5	20	50	49.9	50	53.5	154	70	220	14
FA/FAF/FAZ87	24	8	M20	M30 × 1.5	26	60	59.9	60	64	174	90	250	18
FA/FAF/FAZ97	24	8	M20	M30 × 1.5	26	70	69.9	70	74.5	234	90	320	20
FA/FAF/FAZ107	24	8	M20	M30 × 1.5	26	80	79.9	80	85	279	100	360	22
	24	8	M24	M30 × 1.5	26	90	89.9	90	95	279	100	360	25
FA/FAF/FAZ127	30	8	M24	M36 × 1.5	32	100	99.9	100	106	330	100	420	28
FA/FAF/FAZ157	30	8	M24	M36 × 1.5	32	120	119.9	120	127	416	110	500	32

*** Note: See page 18 for U and UE dimension tolerances. See previous page for UG dimension tolerances.**

Dimensions subject to change without notice.

آتور صنعت ATOORSANAT SEW EURODRIVE

Notes

آتور صنعت
ATOORSANAT

1.K-Series Dimensions

VU

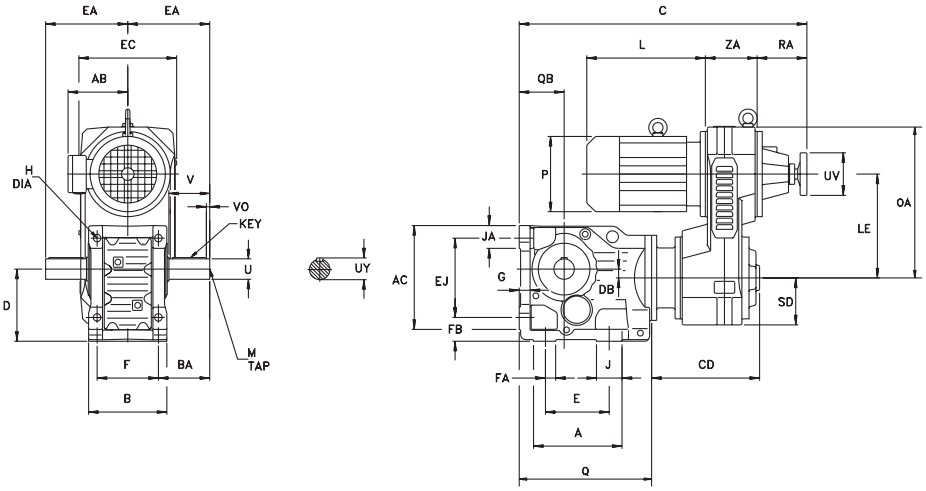

VZ

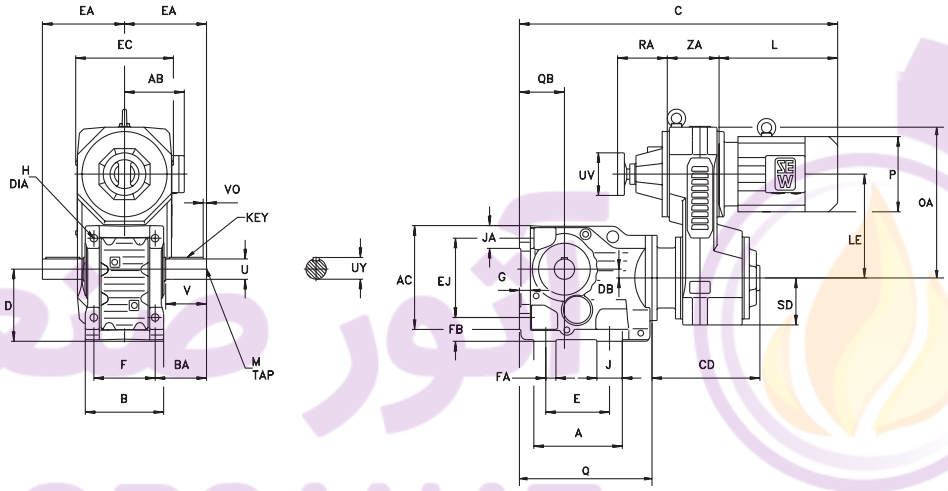

Dimensions are $\frac{\text{inch}}{\text{mm}}$

Gearcase																		
Model	A	AC	B	BA	D*	DB	E	EA	EJ	F	FA	FB	G	H	J	JA	Q	QB
K37	5.63 143	5.91 150	4.72 120	2.36 60	3.94 100	0.33 8.5	4.33 110	4.33 110	4.53 115	3.94 100	1.10 28	1.26 32	0.63 16	0.43 11	1.50 38	1.42 36	7.95 202	2.48 63
K47	6.38 162	6.69 170	5.71 145	2.95 75	4.41 112	0.28 7.2	5.12 130	5.31 135	5.12 130	4.72 120	1.38 35	1.46 37	0.71 18	0.43 11	1.38 35	1.46 37	9.33 237	2.80 71
K57	6.77 172	7.48 190	6.18 157	3.46 88	5.20 132	0.52 13.1	5.12 130	6.02 153	5.91 150	5.12 130	1.18 30	1.77 45	0.83 21	0.53 13.5	1.57 40	1.69 43	9.96 253	3.15 80
K67	6.69 170	7.99 203	6.69 170	3.98 101	5.51 140	0.79 20	4.72 120	6.73 171	6.30 160	5.51 140	1.18 30	1.77 45	0.94 24	0.53 13.5	2.17 55	1.69 43	10.59 269	3.54 90

Output Shaft						
Model	U*	UY	V	VO	Key	M
K37	1.000 25	1.11 28	1.97 50	0.32 5	$\frac{1}{4} \times \frac{1}{4} \times 1\frac{5}{16}$ 8 x 7 x 40	$\frac{3}{8}$ – 16 × 0.87 M10 x 22
K47	1.250 30	1.36 33	2.36 60	0.26 3.5	$\frac{1}{4} \times \frac{1}{4} \times 1\frac{11}{16}$ 8 x 7 x 50	$\frac{1}{2}$ – 13 × 1.12 M10 x 22
K57	1.375 35	1.51 38	2.76 70	0.43 7	$\frac{5}{16} \times \frac{5}{16} \times 1\frac{13}{16}$ 10 x 8 x 56	$\frac{1}{2}$ – 13 × 1.12 M12 x 28
K67	1.625 40	1.79 43	3.15 80	0.38 5	$\frac{3}{8} \times \frac{3}{8} \times 2\frac{1}{4}$ 12 x 8 x 70	$\frac{5}{8}$ – 11× 1.38 M16 x 36

*** Note: See page 18 for tolerances.**

Dimensions subject to change without notice.

آتور صنعت ATOORSANAT
SEW EURODRIVE

VARIGEAR®							
Model	**EC**	**LE**	**OA**	**RA**	**SD**	**UV**	**ZA**
VU/VZ01	6.93 176	7.17 182	10.59 269	3.86 98	2.83 72	3.15 80	3.15 80
VU/VZ11	7.20 183	9.13 232	12.68 322	4.61 117	3.46 88	3.94 100	3.86 98
VU/VZ21	8.94 227	9.65 245	13.98 355	5.12 130	4.33 110	3.94 100	4.72 120
VU/VZ31	11.14 283	12.01 305	17.52 445	5.91 150	5.43 138	4.92 125	5.98 152

VARIGEAR® VU								
Model		**VU01**		**VU11**	**VU21**	**VU31**		
		DT71	**DT80**	**DT90**	**DT100**	**DT100**	**DV112M**	**DV132S**
K37	**C**	19.45 494	19.45 494	21.22 539	— —	— —	— —	— —
	CD	8.39 213	8.39 213	9.37 238	— —	— —	— —	— —
K47	**C**	20.55 522	20.55 522	22.32 567	24.96 634	27.99 711	27.99 711	27.99 711
	CD	8.11 206	8.11 206	9.13 232	10.98 279	13.03 331	13.03 331	13.03 331
K57	**C**	21.18 538	21.18 538	22.95 583	25.59 650	28.62 727	28.62 727	28.62 727
	CD	8.11 206	8.11 206	9.13 232	10.98 279	13.03 331	13.03 331	13.03 331
K67	**C**	21.81 554	21.81 554	23.58 599	26.22 666	29.25 743	29.25 743	29.25 743
	CD	8.11 206	8.11 206	9.13 232	10.98 279	13.03 331	13.03 331	13.03 331

VARIGEAR® VZ								
Model		**VZ01**		**VZ11**	**VZ21**	**VZ31**		
		DT71	**DT80**	**DT90**	**DT100**	**DT100**	**DV112M**	**DV132S**
K37	**C**	20.67 525	22.64 575	24.61 625	— —	— —	— —	— —
	CD	8.39 213	8.39 213	9.37 238	— —	— —	— —	— —
K47	**C**	21.77 553	23.74 603	25.71 653	28.54 725	29.88 759	31.38 797	33.15 842
	CD	8.11 206	8.11 206	9.13 232	10.98 279	13.03 331	13.03 331	13.03 331
K57	**C**	22.40 569	24.37 619	26.34 669	29.17 741	30.51 775	32.01 813	33.78 858
	CD	8.11 206	8.11 206	9.13 232	10.98 279	13.03 331	13.03 331	13.03 331
K67	**C**	23.03 585	25.00 635	26.97 685	29.80 757	31.14 791	32.64 829	34.41 874
	CD	8.11 206	8.11 206	9.13 232	10.98 279	13.03 331	13.03 331	13.03 331

Motor							
	VU/VZ01		**VU/VZ11**	**VU/VZ21**	**VU/VZ31**		
	DT71	**DT80**	**DT90**	**DT100**	**DT100**	**DV112M**	**DV132S**
AB	5.43 138	5.43 138	6.73 171	6.89 175	6.89 175	7.40 188	7.40 188
L	7.95 202	9.92 252	10.75 273	12.24 311	12.24 311	13.74 349	15.51 394
P	5.71 145	5.71 145	7.76 197	7.76 197	7.76 197	8.70 221	8.70 221

Dimension AB is to motor conduit box
Eye bolts are removable
Size VU6 is supplied with windless-type control
See page 62 for VARIGEAR® configuration options.
See page 271 for available output shaft options.

Dimensions subject to change without notice.

VU

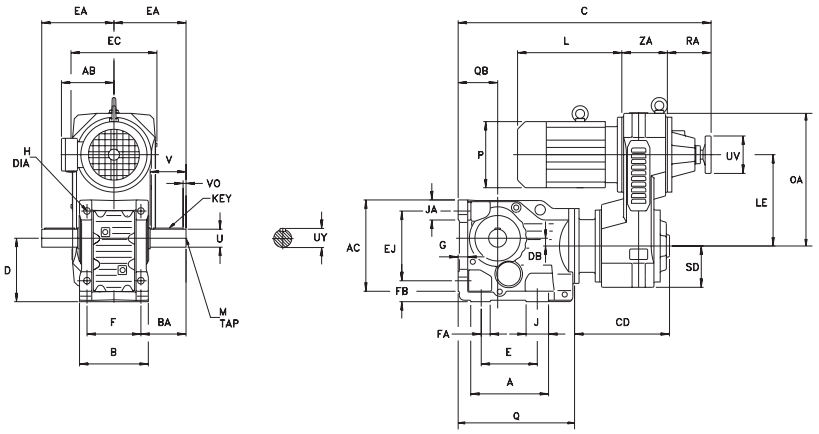

VZ

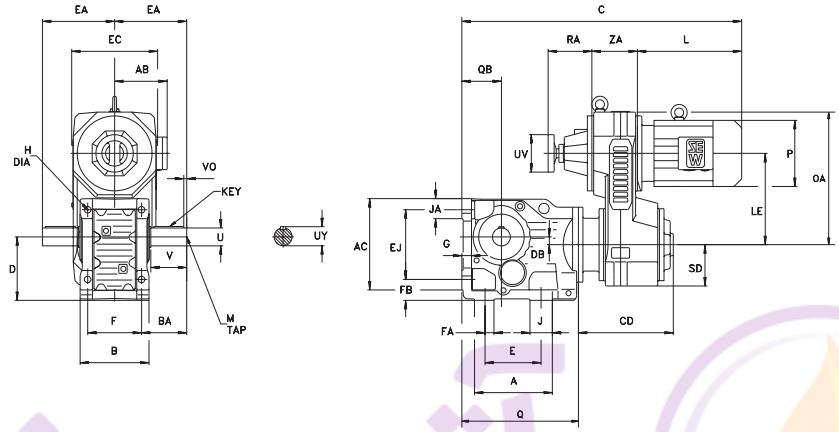

Dimensions are $\frac{\text{inch}}{\text{mm}}$

Gearcase																		
Model	**A**	**AC**	**B**	**BA**	**D***	**DB**	**E**	**EA**	**EJ**	**F**	**FA**	**FB**	**G**	**H**	**J**	**JA**	**Q**	**QB**
K77	8.19 208	10.35 263	7.87 200	4.86 123.5	7.09 180	1.23 31.3	5.91 150	8.11 206	7.87 200	6.50 165	1.57 40	2.17 55	1.06 27	0.69 17.5	2.17 55	2.17 55	12.36 314	4.41 112
K87	10.24 260	12.01 305	9.06 230	5.91 150	8.35 212	1.02 25.9	7.09 180	9.45 240	9.17 233	7.09 180	2.17 55	2.76 70	1.26 32	0.87 22	2.95 75	2.64 67	15.31 389	5.20 132
K97	11.57 294	14.65 372	11.42 290	6.73 171	10.43 265	1.27 32.3	9.45 240	11.46 291	11.61 295	9.45 240	2.95 75	2.95 75	1.42 36	1.02 26	2.36 60	3.23 82	17.20 437	6.30 160
K107	14.96 380	17.64 448	13.39 340	8.35 212	12.40 315	2.05 52	11.02 280	13.66 347	14.17 360	10.63 270	3.74 95	3.74 95	1.57 40	1.30 33	3.94 100	3.86 98	21.30 541	7.87 200

Output Shaft						
Model	**U***	**UY**	**V**	**VO**	**Key**	**M**
K77	2.000 50	2.22 53.5	3.94 100	0.64 10	$\frac{1}{2} \times \frac{1}{2} \times 2\frac{5}{8}$ 14 x 9 x 80	$\frac{3}{4}$ – 10 × 1.61 M16 x 36
K87	2.375 60	2.65 64	4.72 120	0.51 5	$\frac{5}{8} \times \frac{5}{8} \times 3\frac{5}{8}$ 18 x 11 x 110	$\frac{3}{4}$ – 10 × 1.61 M20 x 42
K97	2.875 70	3.20 74.5	5.51 140	0.67 7.5	$\frac{3}{4} \times \frac{3}{4} \times 4\frac{1}{8}$ 20 x 12 x 125	$\frac{3}{4}$ – 10 × 1.61 M20 x 42
K107	3.625 90	4.01 95	6.69 170	0.63 5	$\frac{7}{8} \times \frac{7}{8} \times 5\frac{3}{8}$ 25 x 14 x 160	1– 8 × 2.13 M24 x 50

*** Note: See page 18 for tolerances.**

VARIGEAR®						
Model	**EC**	**LE**	**OA**	**RA**	**SD**	**UV**	**ZA**
VU/VZ11	7.20 183	9.13 232	12.68 322	4.61 117	3.46 88	3.94 100	3.86 98
VU/VZ21	8.94 227	9.65 245	13.98 355	5.12 130	4.33 110	3.94 100	4.72 120

Dimensions subject to change without notice.

آتور صنعت ATOORSANAT SEW EURODRIVE

VARIGEAR®							
Model	**EC**	**LE**	**OA**	**RA**	**SD**	**UV**	**ZA**
VU/VZ31	11.14 283	12.01 305	17.52 445	5.91 150	5.43 138	4.92 125	5.98 152
VU/VZ41	13.70 348	14.96 380	21.77 553	7.44 189	6.69 170	7.87 200	7.09 180
VU51	15.67 398	18.11 460	25.91 658	8.66 220	7.68 195	7.87 200	7.87 200
VU6	18.94 481	22.60 574	31.69 805	6.10 155	9.65 245	15.16 385	8.43 214

VARIGEAR® VU														
Model		**VU11**	**VU21**	**VU31**			**VU41**			**VU51**		**VU6**		
		DT90	**DT100**	**DT100**	**DV112M**	**DV132S**	**DV132M**	**DV132ML**	**DV160M**	**DV160L**	**DV180**	**DV180**	**DV200**	**DV225**
K77	**C**	25.12 638	27.68 703	30.67 779	30.67 779	30.67 779	35.12 892	35.12 892	35.12 892	— —	— —	— —	— —	— —
	CD	8.90 226	10.67 271	12.68 322	12.68 322	12.68 322	15.63 397	15.63 397	15.63 397	— —	— —	— —	— —	— —
K87	**C**	— —	30.47 774	33.43 849	33.43 849	33.43 849	37.87 962	37.87 962	37.87 962	41.18 1046	41.18 1046	— —	— —	— —
	CD	— —	10.51 267	12.48 317	12.48 317	12.48 317	15.43 392	15.43 392	15.43 392	17.68 449	17.68 449	— —	— —	— —
K97	**C**	— —	— —	35.12 892	35.12 892	35.12 892	39.57 1005	39.57 1005	39.57 1005	42.87 1089	42.87 1089	— —	— —	— —
	CD	— —	— —	12.28 312	12.28 312	12.28 312	15.24 387	15.24 387	15.24 387	17.48 444	17.48 444	— —	— —	— —
K107	**C**	— —	— —	— —	— —	— —	43.43 1103	43.43 1103	43.43 1103	46.73 1187	46.73 1187	49.06 1246	49.06 1246	49.06 1246
	CD	— —	— —	— —	— —	— —	15.00 381	15.00 381	15.00 381	17.24 438	17.24 438	26.06 662	26.06 662	26.06 662

VARIGEAR® VZ									
Model		**VZ11**	**VZ21**	**VZ31**			**VZ41**		
		DT90	**DT100**	**DT100**	**DV112M**	**DV132S**	**DV132M**	**DV132ML**	**DV160M**
K77	**C**	28.50 724	31.26 794	32.56 827	34.06 865	35.83 910	37.60 955	39.96 1015	39.96 1015
	CD	8.90 226	10.67 271	12.68 322	12.68 322	12.68 322	15.63 397	15.63 397	15.63 397
K87	**C**	— —	34.06 865	35.31 897	36.81 935	38.58 980	40.35 1025	42.72 1085	42.72 1085
	CD	— —	10.51 267	12.48 317	12.48 317	12.48 317	15.43 392	15.43 392	15.43 392
K97	**C**	— —	— —	37.01 940	38.50 978	40.28 1023	42.05 1068	44.41 1128	44.41 1128
	CD	— —	— —	12.28 312	12.28 312	12.28 312	15.24 387	15.24 387	15.24 387
K107	**C**	— —	— —	— —	— —	— —	45.91 1166	48.27 1226	48.27 1226
	CD	— —	— —	— —	— —	— —	15.00 381	15.00 381	15.00 381

Motor													
	VU/VZ11	**VU/VZ21**	**VU/VZ31**			**VU/VZ41**			**VU51**		**VU6**		
	DT90	**DT100**	**DT100**	**DV112M**	**DV132S**	**DV132M**	**DV132ML**	**DV160M**	**DV160L**	**DV180**	**DV180**	**DV200**	**DV225**
AB	6.73 171	6.89 175	6.89 175	7.40 188	7.40 188	9.13 232	9.13 232	9.13 232	10.04 255	10.55 268	10.55 268	11.81 300	11.97 304
L	10.75 273	12.24 311	12.24 311	13.74 349	15.51 394	15.83 402	18.19 462	18.19 462	19.80 503	22.64 575	22.64 575	24.53 623	28.54 725
P	7.76 197	7.76 197	7.76 197	8.70 221	8.70 221	10.83 275	10.83 275	10.83 275	13.03 331	13.03 331	13.03 331	15.51 394	15.51 394

Dimension AB is to motor conduit box
Eye bolts are removable
Size VU6 is supplied with windless-type control
See page 62 for VARIGEAR® configuration options and page 271 for available output shaft options.

VU

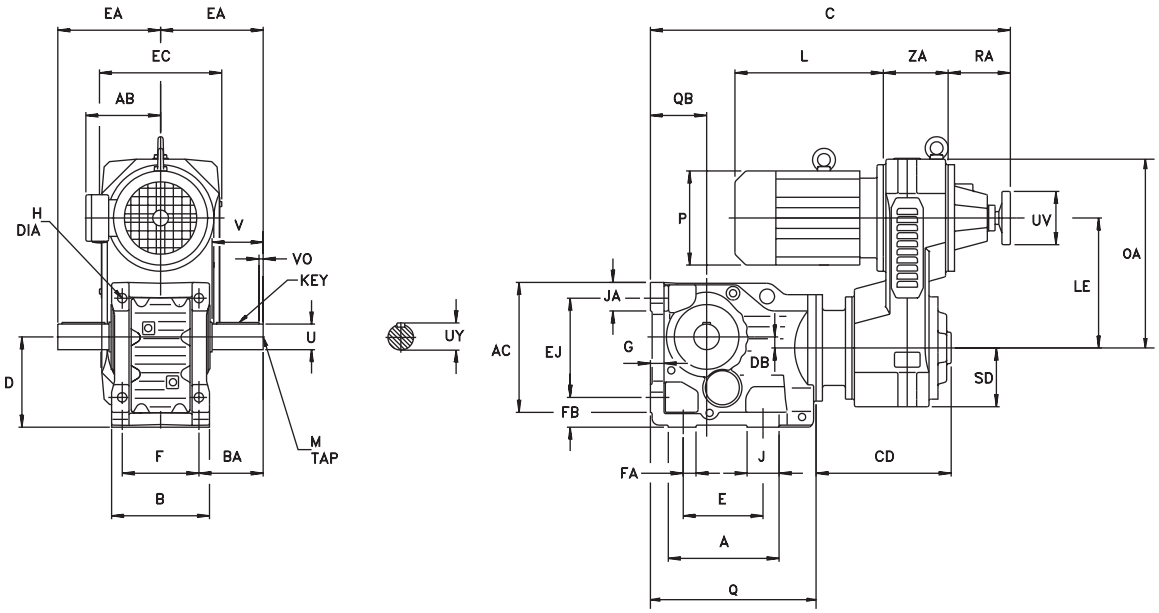

VZ

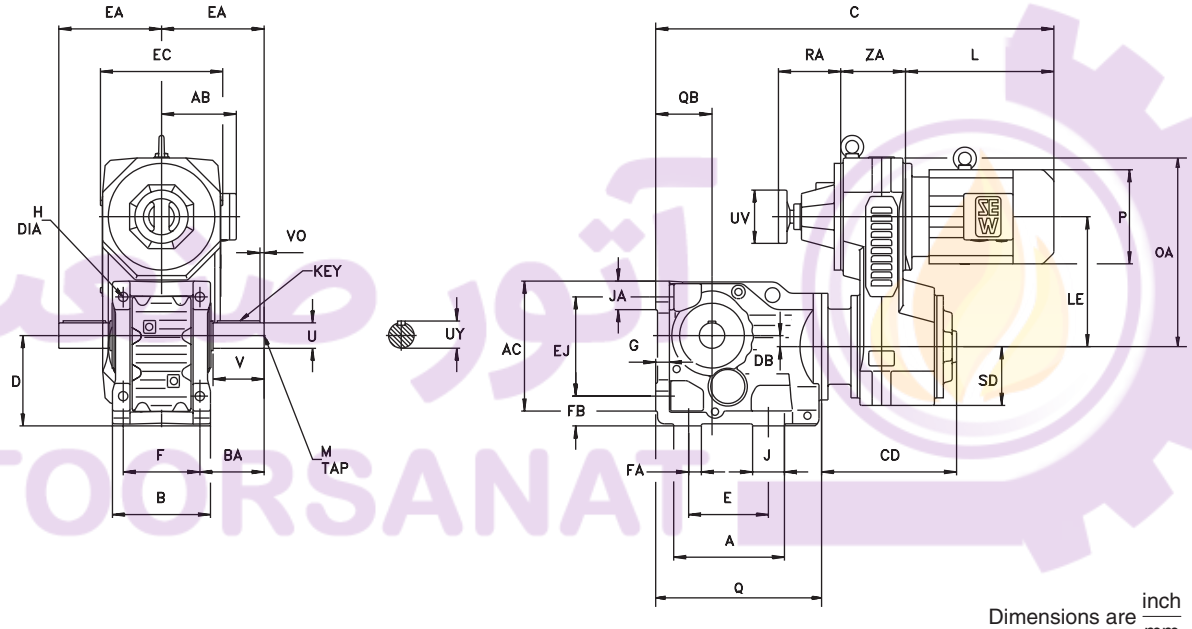

Dimensions are $\frac{\text{inch}}{\text{mm}}$

Gearcase																		
Model	**A**	**AC**	**B**	**BA**	**D***	**DB**	**E**	**EA**	**EJ**	**F**	**FA**	**FB**	**G**	**H**	**J**	**JA**	**Q**	**QB**
K127	17.32 440	20.71 526	15.75 400	9.96 253	14.76 375	2.09 53	13.78 350	16.46 418	16.54 420	12.99 330	4.53 115	4.33 110	1.77 45	1.54 39	3.94 100	4.37 111	24.21 615	8.86 225
K157	18.90 480	24.96 634	19.69 500	9.72 247	17.72 450	2.82 71.7	14.96 380	17.99 457	19.69 500	16.54 420	5.51 140	5.12 130	1.97 50	1.54 39	3.94 100	5.12 130	27.80 706	11.02 280

Output Shaft						
Model	**U***	**UY**	**V**	**VO**	**Key**	**M**
K127	4.375 110	4.82 116	8.27 210	1.09 15	1× 1× 6 28 x 16 x 180	1– 8 × 2.13 M24 x 50
K157	4.750 120	5.29 127	8.27 210	0.82 5	1¼ × 1¼ × 6 9/16 32 x 18 x 200	1– 8 × 2.13 M24 x 50

*** Note: See page 18 for tolerances.**

Dimensions subject to change without notice.

آتور صنعت ATOORSANAT
SEW EURODRIVE

VARIGEAR®							
Model	**EC**	**LE**	**OA**	**RA**	**SD**	**UV**	**ZA**
VU51	15.67 398	18.11 460	25.91 658	8.66 220	7.68 195	7.87 200	7.87 200
VU6	18.94 481	22.60 574	31.69 805	6.10 155	9.65 245	15.16 385	8.43 214

VARIGEAR® VU						
Model		**VU51**		**VU6**		
		DV160L	**DV180**	**DV180**	**DV200**	**DV225**
K127	**C**	49.06 1246	49.06 1246	51.38 1305	51.38 1305	51.38 1305
	CD	16.65 423	16.65 423	25.47 647	25.47 647	25.47 647
K157	**C**	— —	— —	55.94 1421	55.94 1421	55.94 1421
	CD	— —	— —	25.16 639	25.16 639	25.16 639

Motor					
	VU51		**VU6**		
	DV160L	**DV180**	**DV180**	**DV200**	**DV225**
AB	10.04 255	10.55 268	10.55 268	11.81 300	11.97 304
L	19.80 503	22.64 575	22.64 575	24.53 623	28.54 725
P	13.03 331	13.03 331	13.03 331	15.51 394	15.51 394

Dimension AB is to motor conduit box
Eye bolts are removable
Size VU6 is supplied with windless-type control
See page 62 for VARIGEAR® configuration options.
See page 271 for available output shaft options.

آتور صنعت
ATOORSANAT

VU

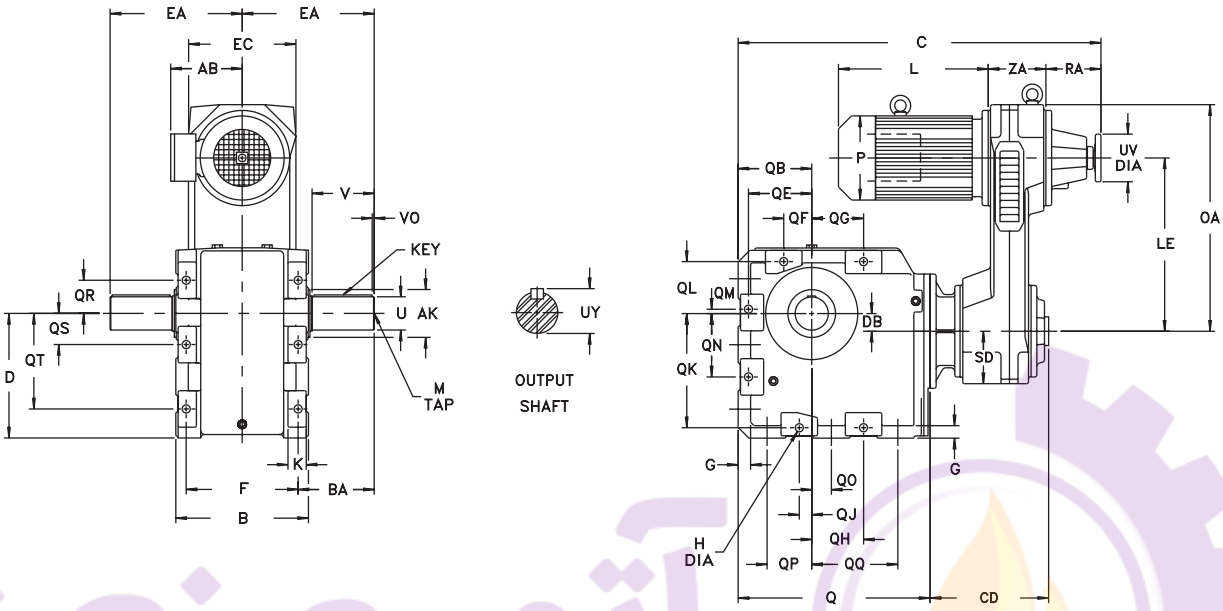

Dimensions are inch / mm

Gearcase														
Model	AK*	B	BA	D*	DB	EA	F	G	H	K	Q	QB	QE	QF
K167	9.06 230	22.83 580	12.40 315	19.69 500	3.82 97	21.85 555	18.90 480	1.97 50	1.30 33	4.09 104	32.95 837	12.40 315	10.43 265	4.53 115
K187	10.24 260	25.20 640	15.24 387	23.62 600	4.41 112	25.87 6.57	21.26 540	1.97 50	1.54 39	4.33 110	37.24 946	13.98 355	12.01 305	5.31 135

Gearcase													
Model	QG	QH	QJ	QK	QL	QM	QN	QO	QP	QQ	QR	QS	QT
K167	8.27 210	8.27 210	2.76 70	17.72 450	8.66 220	0.87 22	9.84 250	2.76 70	7.87 200	13.39 340	6.10 155	4.53 115	15.16 385
K187	9.84 250	9.84 250	2.36 60	21.65 550	9.84 250	0.20 5	12.01 305	3.74 95	8.46 215	15.94 405	6.30 160	5.91 150	18.11 460

*** Note: See page 18 for tolerances.**

Dimensions subject to change without notice.

Output Shaft						
Model	**U***	**UY**	**V**	**VO**	**Key**	**M**
K167	6.250 160	6.65 169	9.84 250	0.59 15	1½ × 1½ × 7⅛ 40 x 20 x 220	1⅛ – 7 × 2.44 M30 x 63
K187	7.500 190	8.27 200	12.60 320	0.39 10	1¾ × 1¾ × 10 45 x 25 x 300	1⅛ – 7 × 2.44 M30 x 63

*** Note: See page 18 for tolerances.**

VARIGEAR®							
Model	**EC**	**LE**	**OA**	**RA**	**SD**	**UV**	**ZA**
VU6	18.94 481	22.60 574	31.69 805	6.10 155	9.65 245	15.16 385	8.43 214

VARIGEAR® VU				
Model		**DV180**	**DV200**	**DV225**
K167	**C**	61.10 1552	61.10 1552	61.10 1552
	CD	25.16 639	25.16 639	25.16 639
K187	**C**	65.39 1661	65.39 1661	65.39 1661
	CD	25.16 639	25.16 639	25.16 639

Motor			
	VU6		
	DV180	**DV200**	**DV225**
AB	10.55 268	11.81 300	11.97 304
L	22.64 575	24.53 623	28.54 725
P	13.03 331	15.51 394	15.51 394

Dimension AB is to motor conduit box
Eye bolts are removable
Size VU6 is supplied with windless-type control
See page 62 for VARIGEAR® configuration options.
See page 271 for available output shaft options.

آتور صنعت
ATOORSANAT

VU

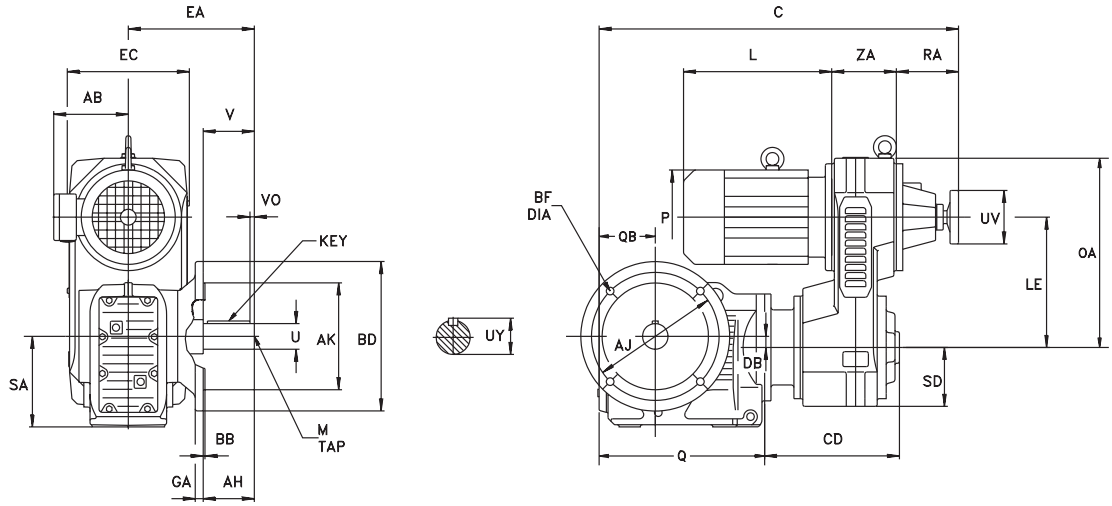

VZ

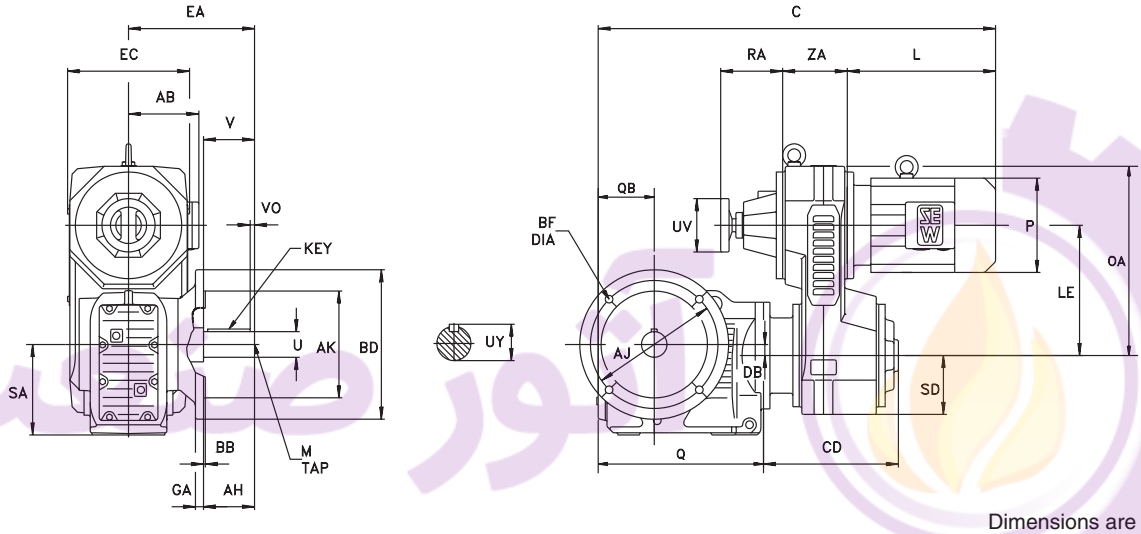

Dimensions are inch / mm

Model	Gearcase					Output Shaft					
	DB	EA	Q	QB	SA	U*	UY	V	VO	Key	M
KF37	0.33 8.5	5.28 134	8.27 210	2.80 71	3.94 100	1.000 25	1.11 28	1.97 50	0.32 5	$\frac{1}{4} \times \frac{1}{4} \times 1\frac{5}{16}$ 8 x 7 x 40	$\frac{3}{8}$ – 16 × 0.87 M10 x 22
KF47	0.28 7.2	6.30 160	9.57 243	3.03 77	4.41 112	1.250 30	1.36 33	2.36 60	0.26 3.5	$\frac{1}{4} \times \frac{1}{4} \times 1\frac{11}{16}$ 8 x 7 x 50	$\frac{1}{2}$ – 13 × 1.12 M10 x 22
KF57	0.52 13.1	6.97 177	10.59 269	3.78 96	5.20 132	1.375 35	1.51 38	2.76 70	0.43 7	$\frac{5}{16} \times \frac{5}{16} \times 1\frac{13}{16}$ 10 x 8 x 56	$\frac{1}{2}$ – 13 × 1.12 M12 x 28
KF67	0.79 20	7.60 193	10.75 273	3.70 94	5.51 140	1.625 40	1.79 43	3.15 80	0.38 5	$\frac{3}{8} \times \frac{3}{8} \times 2\frac{1}{4}$ 12 x 8 x 70	$\frac{5}{8}$ – 11× 1.38 M16 x 36

Flange							
Model	AH	AJ	AK*	BB	BD	BF	GA
KF37	1.97 50	5.12 130	4.331 110	0.14 3.5	6.30 160	0.35 9	0.39 10
KF47	2.36 60	6.50 165	5.118 130	0.14 3.5	7.87 200	0.43 11	0.47 12
KF57	2.76 70	8.46 215	7.087 180	0.16 4	9.84 250	0.53 13.5	0.59 15
KF67	3.15 80	8.46 215	7.087 180	0.16 4	9.84 250	0.53 13.5	0.59 15

*** Note: See page 18 for tolerances.**

Dimensions subject to change without notice.

ATOORSANAT آتور صنعت
SEW EURODRIVE

VARIGEAR®							
Model	**EC**	**LE**	**OA**	**RA**	**SD**	**UV**	**ZA**
VU/VZ01	6.93 176	7.17 182	10.59 269	3.86 98	2.83 72	3.15 80	3.15 80
VU/VZ11	7.20 183	9.13 232	12.68 322	4.61 117	3.46 88	3.94 100	3.86 98
VU/VZ21	8.94 227	9.65 245	13.98 355	5.12 130	4.33 110	3.94 100	4.72 120
VU/VZ31	11.14 283	12.01 305	17.52 445	5.91 150	5.43 138	4.92 125	5.98 152

VARIGEAR® VU								
Model		**VU01**		**VU11**	**VU21**	**VU31**		
		DT71	**DT80**	**DT90**	**DT100**	**DT100**	**DV112M**	**DV132S**
KF37	**C**	19.76 502	19.76 502	21.54 547	— —	— —	— —	— —
	CD	8.39 213	8.39 213	9.37 238	— —	— —	— —	— —
KF47	**C**	20.79 528	20.79 528	22.56 573	25.20 640	28.23 717	28.23 717	28.23 717
	CD	8.11 206	8.11 206	9.13 232	10.98 279	13.03 331	13.03 331	13.03 331
KF57	**C**	21.81 554	21.81 554	23.58 599	26.22 666	29.25 743	29.25 743	29.25 743
	CD	8.11 206	8.11 206	9.13 232	10.98 279	13.03 331	13.03 331	13.03 331
KF67	**C**	21.97 558	21.97 558	23.74 603	26.38 670	29.41 747	29.41 747	29.41 747
	CD	8.11 206	8.11 206	9.13 232	10.98 279	13.03 331	13.03 331	13.03 331

VARIGEAR® VZ								
Model		**VZ01**		**VZ11**	**VZ21**	**VZ31**		
		DT71	**DT80**	**DT90**	**DT100**	**DT100**	**DV112M**	**DV132S**
KF37	**C**	20.98 533	22.95 583	24.92 633	— —	— —	— —	— —
	CD	8.39 213	8.39 213	9.37 238	— —	— —	— —	— —
KF47	**C**	22.01 559	23.98 609	25.94 659	28.78 731	30.12 765	31.61 803	33.39 848
	CD	8.11 206	8.11 206	9.13 232	10.98 279	13.03 331	13.03 331	13.03 331
KF57	**C**	23.03 585	25.00 635	26.97 685	29.80 757	31.14 791	32.64 829	34.41 874
	CD	8.11 206	8.11 206	9.13 232	10.98 279	13.03 331	13.03 331	13.03 331
KF67	**C**	23.19 589	25.16 639	27.13 689	29.96 761	31.30 795	32.80 833	34.57 878
	CD	8.11 206	8.11 206	9.13 232	10.98 279	13.03 331	13.03 331	13.03 331

Motor							
	VU/VZ01		**VU/VZ11**	**VU/VZ21**	**VU/VZ31**		
	DT71	**DT80**	**DT90**	**DT100**	**DT100**	**DV112M**	**DV132S**
AB	5.43 138	5.43 138	6.73 171	6.89 175	6.89 175	7.40 188	7.40 188
L	7.95 202	9.92 252	10.75 273	12.24 311	12.24 311	13.74 349	15.51 394
P	5.71 145	5.71 145	7.76 197	7.76 197	7.76 197	8.70 221	8.70 221

Dimension AB is to motor conduit box
Eye bolts are removable
Size VU6 is supplied with windless-type control
See page 62 for VARIGEAR® configuration options.
See page 271 for available output shaft options.

Dimensions subject to change without notice.

VU

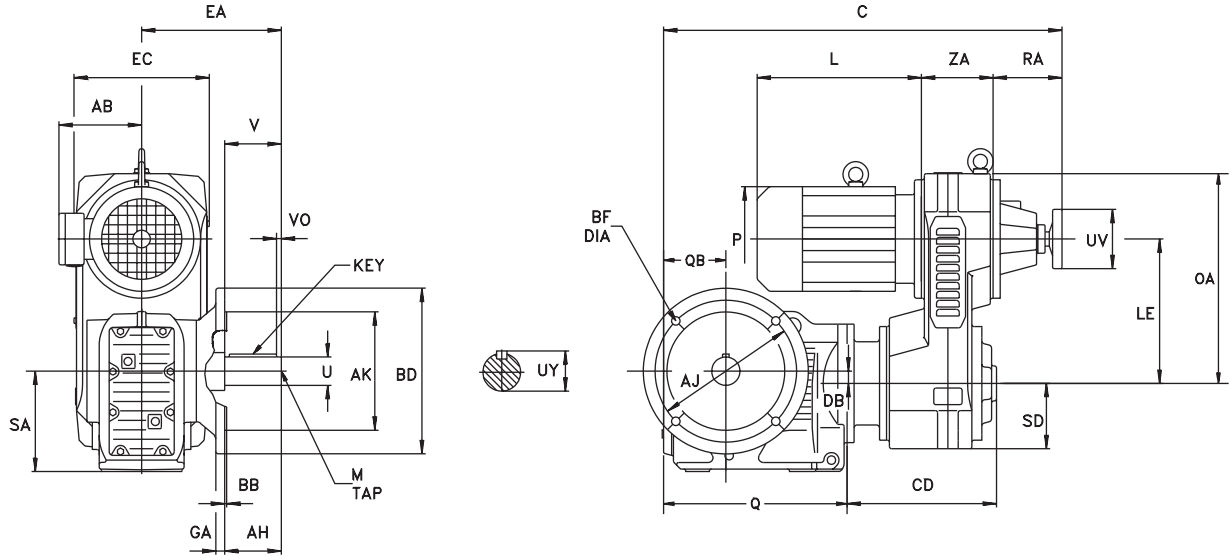

VZ

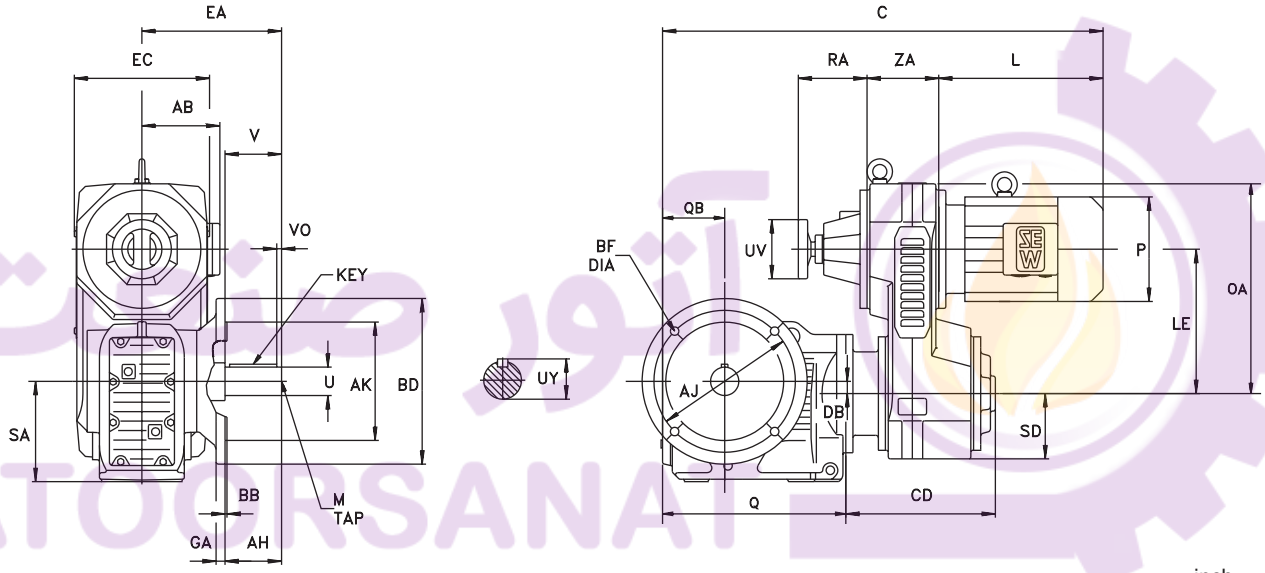

Dimensions are inch / mm

Model	Gearcase					Output Shaft					
	DB	EA	Q	QB	SA	U*	UY	V	VO	Key	M
KF77	1.23 31.3	9.53 242	12.24 311	4.29 109	7.09 180	2.000 50	2.22 53.5	3.94 100	0.64 10	½ × ½ × 2⅝ 14 x 9 x 80	¾ – 10 × 1.61 M16 x 36
KF87	1.02 25.9	10.63 270	15.31 389	5.20 132	8.35 212	2.375 60	2.65 64	4.72 120	0.51 5	⅝ × ⅝ × 3⅝ 18 x 11 x 110	¾ – 10 × 1.61 M20 x 42

Flange								
								Specify BD dimension when ordering
Model		AH	AJ	AK*	BB	BD	BF	GA
KF77	Option 1	3.94 100	10.43 265	9.055 230	0.16 4	11.81 300	0.53 13.5	0.63 16
	Option 2**	3.94 100	8.46 215	7.087 180	0.16 4	9.84 250	0.53 13.5	0.59 15
KF87		4.72 120	11.81 300	9.843 250	0.20 5	13.78 350	0.69 17.5	0.71 18

*** Note: See page 18 for tolerances.**
**** This flange option reduces the gearbox torque rating - contact SEW-Eurodrive for details.**

Dimensions subject to change without notice.

آتور صنعت ATOORSANAT
SEW EURODRIVE

VARIGEAR®							
Model	**EC**	**LE**	**OA**	**RA**	**SD**	**UV**	**ZA**
VU/VZ11	7.20 183	9.13 232	12.68 322	4.61 117	3.46 88	3.94 100	3.86 98
VU/VZ21	8.94 227	9.65 245	13.98 355	5.12 130	4.33 110	3.94 100	4.72 120
VU/VZ31	11.14 283	12.01 305	17.52 445	5.91 150	5.43 138	4.92 125	5.98 152
VU/VZ41	13.70 348	14.96 380	21.77 553	7.44 189	6.69 170	7.87 200	7.09 180
VU51	15.67 398	18.11 460	25.91 658	8.66 220	7.68 195	7.87 200	7.87 200

VARIGEAR® VU											
Model		**VU11**	**VU21**	**VU31**			**VU41**			**VU51**	
		DT90	**DT100**	**DT100**	**DV112M**	**DV132S**	**DV132M**	**DV132ML**	**DV160M**	**DV160L**	**DV180**
KF77	**C**	25.00 635	27.56 700	30.55 776	30.55 776	30.55 776	35.00 889	35.00 889	35.00 889	— —	— —
	CD	8.90 226	10.67 271	12.68 322	12.68 322	12.68 322	15.63 397	15.63 397	15.63 397	— —	— —
KF87	**C**	— —	30.47 774	33.43 849	33.43 849	33.43 849	37.87 962	37.87 962	37.87 962	41.18 1046	41.18 1046
	CD	— —	10.51 267	12.48 317	12.48 317	12.48 317	15.43 392	15.43 392	15.43 392	17.68 449	17.68 449

VARIGEAR® VZ									
Model		**VZ11**	**VZ21**	**VZ31**			**VZ41**		
		DT90	**DT100**	**DT100**	**DV112M**	**DV132S**	**DV132M**	**DV132ML**	**DV160M**
KF77	**C**	28.39 721	31.14 791	32.44 824	33.94 862	35.71 907	37.48 952	39.84 1012	39.84 1012
	CD	8.90 226	10.67 271	12.68 322	12.68 322	12.68 322	15.63 397	15.63 397	15.63 397
KF87	**C**	— —	34.06 865	35.31 897	36.81 935	38.58 980	40.35 1025	42.72 1085	42.72 1085
	CD	— —	10.51 267	12.48 317	12.48 317	12.48 317	15.43 392	15.43 392	15.43 392

Motor										
	VU/VZ11	**VU/VZ21**	**VU/VZ31**			**VU/VZ41**			**VU51**	
	DT90	**DT100**	**DT100**	**DV112M**	**DV132S**	**DV132M**	**DV132ML**	**DV160M**	**DV160L**	**DV180**
AB	6.73 171	6.89 175	6.89 175	7.40 188	7.40 188	9.13 232	9.13 232	9.13 232	10.04 255	10.55 268
L	10.75 273	12.24 311	12.24 311	13.74 349	15.51 394	15.83 402	18.19 462	18.19 462	19.80 503	22.64 575
P	7.76 197	7.76 197	7.76 197	8.70 221	8.70 221	10.83 275	10.83 275	10.83 275	13.03 331	13.03 331

Dimension AB is to motor conduit box
Eye bolts are removable
Size VU6 is supplied with windless-type control
See page 62 for VARIGEAR® configuration options.
See page 271 for available output shaft options.

VU

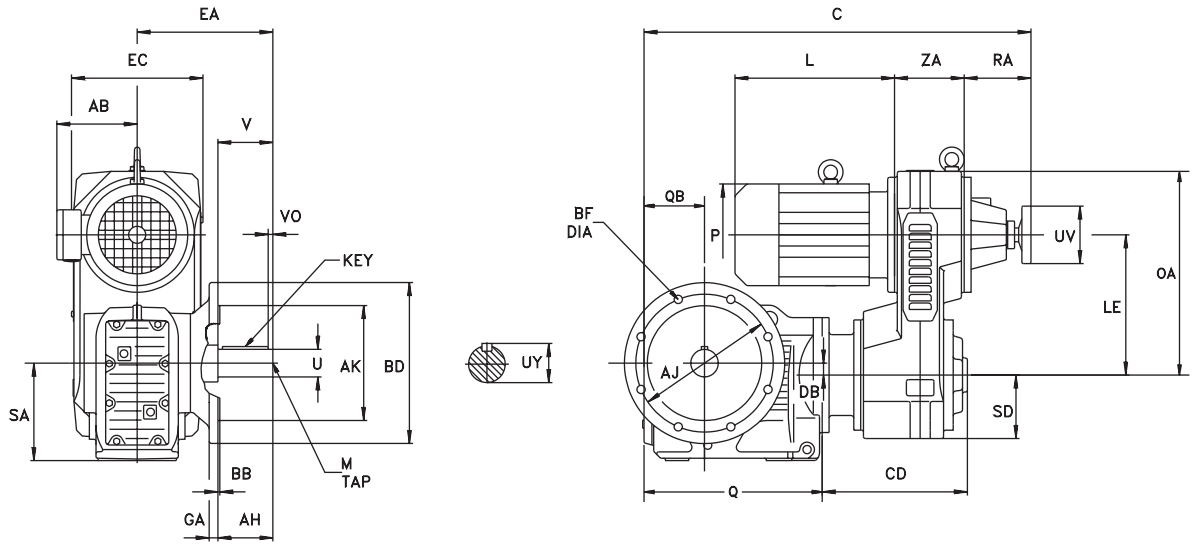

VZ

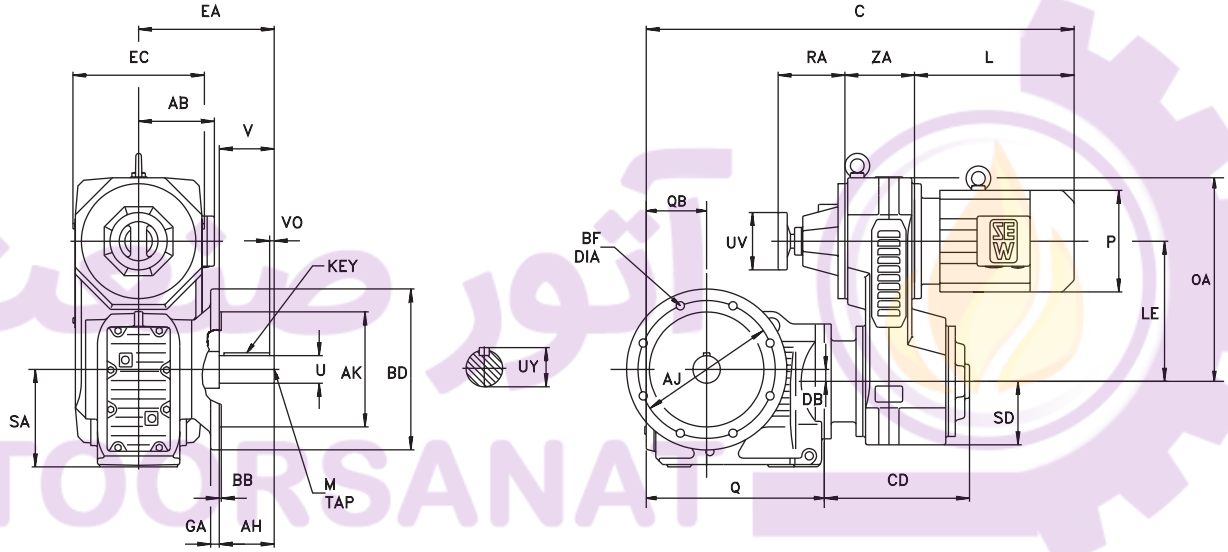

آتور صنعت
ATOORSANAT

Dimensions are inch / mm

Model	Gearcase					Output Shaft					
	DB	EA	Q	QB	SA	U*	UY	V	VO	Key	M
KF97	1.27 32.3	13.07 332	17.13 435	6.22 158	10.43 265	2.875 70	3.20 74.5	5.51 140	0.67 7.5	¾ × ¾ × 4 ⅛ 20 x 12 x 125	¾ – 10 × 1.61 M20 x 42
KF107	2.05 52	15.20 386	21.14 537	7.72 196	12.40 315	3.625 90	4.01 95	6.69 170	0.63 5	⅞ × ⅞ × 5 ⅜ 25 x 14 x 160	1– 8 × 2.13 M24 x 50

	Flange						
Model	AH	AJ	AK*	BB	BD	BF	GA
KF97	5.51 140	15.75 400	13.780 350	0.20 5	17.72 450	0.69 17.5	0.87 22
KF107	6.69 170	15.75 400	13.780 350	0.20 5	17.72 450	0.69 17.5	0.87 22

*** Note: See page 18 for tolerances.**

Dimensions subject to change without notice.

آتور صنعت ATOORSANAT
SEW EURODRIVE

VARIGEAR®							
Model	**EC**	**LE**	**OA**	**RA**	**SD**	**UV**	**ZA**
VU/VZ31	11.14 283	12.01 305	17.52 445	5.91 150	5.43 138	4.92 125	5.98 152
VU/VZ41	13.70 348	14.96 380	21.77 553	7.44 189	6.69 170	7.87 200	7.09 180
VU51	15.67 398	18.11 460	25.91 658	8.66 220	7.68 195	7.87 200	7.87 200
VU6	18.94 481	22.60 574	31.69 805	6.10 155	9.65 245	15.16 385	8.43 214

VARIGEAR® VU												
Model		**VU31**			**VU41**			**VU51**		**VU6**		
		DT100	**DV112M**	**DV132S**	**DV132M**	**DV132ML**	**DV160M**	**DV160L**	**DV180**	**DV180**	**DV200**	**DV225**
KF97	**C**	35.04 890	35.04 890	35.04 890	39.49 1003	39.49 1003	39.49 1003	42.80 1087	42.80 1087	— —	— —	— —
	CD	12.28 312	12.28 312	12.28 312	15.24 387	15.24 387	15.24 387	17.48 444	17.48 444	— —	— —	— —
KF107	**C**	— —	— —	— —	43.27 1099	43.27 1099	43.27 1099	46.57 1183	46.57 1183	48.90 1242	48.90 1242	48.90 1242
	CD	— —	— —	— —	15.00 381	15.00 381	15.00 381	17.24 438	17.24 438	26.06 662	26.06 662	26.06 662

VARIGEAR® VZ							
Model		**VZ31**			**VZ41**		
		DT100	**DV112M**	**DV132S**	**DV132M**	**DV132ML**	**DV160M**
KF97	**C**	36.93 938	38.43 976	40.20 1021	41.97 1066	44.33 1126	44.33 1126
	CD	12.28 312	12.28 312	12.28 312	15.24 387	15.24 387	15.24 387
KF107	**C**	— —	— —	— —	45.75 1162	48.11 1222	48.11 1222
	CD	— —	— —	— —	15.00 381	15.00 381	15.00 381

Motor											
	VU/VZ31			**VU/VZ41**			**VU51**		**VU6**		
	DT100	**DV112M**	**DV132S**	**DV132M**	**DV132ML**	**DV160M**	**DV160L**	**DV180**	**DV180**	**DV200**	**DV225**
AB	6.89 175	7.40 188	7.40 188	9.13 232	9.13 232	9.13 232	10.04 255	10.55 268	10.55 268	11.81 300	11.97 304
L	12.24 311	13.74 349	15.51 394	15.83 402	18.19 462	18.19 462	19.80 503	22.64 575	22.64 575	24.53 623	28.54 725
P	7.76 197	8.70 221	8.70 221	10.83 275	10.83 275	10.83 275	13.03 331	13.03 331	13.03 331	15.51 394	15.51 394

Dimension AB is to motor conduit box
Eye bolts are removable
Size VU6 is supplied with windless-type control
See page 62 for VARIGEAR® configuration options.
See page 271 for available output shaft options.

آتور صنعت
ATOORSANAT

VU

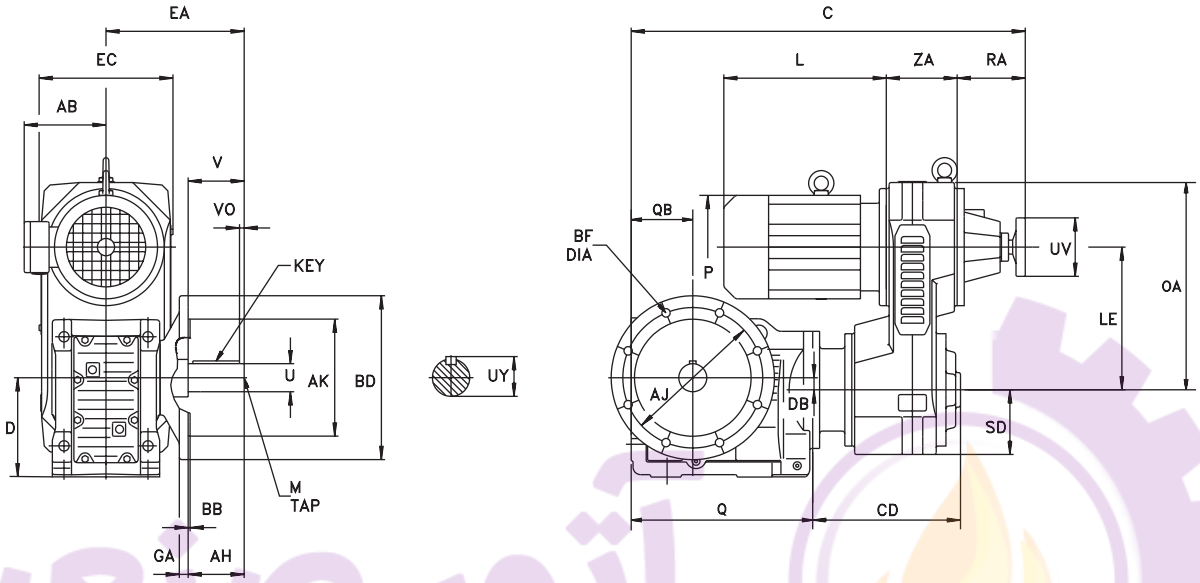

آتور صنعت
ATOORSANAT

Dimensions are inch / mm

Model	Gearcase					Output Shaft					
	D*	DB	EA	Q	QB	U*	UY	V	VO	Key	M
KF127	14.76 375	2.09 53	18.35 466	24.21 615	8.86 225	4.375 110	4.82 116	8.27 210	1.09 15	1× 1× 6 28 x 16 x 180	1– 8 × 2.13 M24 x 50
KF157	17.72 450	2.82 71.7	20.47 520	27.80 706	11.02 280	4.750 120	5.29 127	8.27 210	0.82 5	1¼ × 1¼ × 6 9/16 32 x 18 x 200	1– 8 × 2.13 M24 x 50

Flange							
Model	AH	AJ	AK*	BB	BD	BF	GA
KF127	8.27 210	19.69 500	17.717 450	0.20 5	21.65 550	0.69 17.5	0.98 25
KF157	8.27 210	23.62 600	21.654 550	0.24 6	25.98 660	0.87 22	1.10 28

*** Note: See page 18 for tolerances.**

Dimensions subject to change without notice.

آتور صنعت ATOORSANAT
SEW EURODRIVE

VARIGEAR®							
Model	**EC**	**LE**	**OA**	**RA**	**SD**	**UV**	**ZA**
VU51	15.67 398	18.11 460	25.91 658	8.66 220	7.68 195	7.87 200	7.87 200
VU6	18.94 481	22.60 574	31.69 805	6.10 155	9.65 245	15.16 385	8.43 214

VARIGEAR® VU						
Model		**VU51**		**VU6**		
		DV160L	**DV180**	**DV180**	**DV200**	**DV225**
KF127	**C**	49.06 1246	49.06 1246	51.38 1305	51.38 1305	51.38 1305
	CD	16.65 423	16.65 423	25.47 647	25.47 647	25.47 647
KF157	**C**	— —	— —	55.94 1421	55.94 1421	55.94 1421
	CD	— —	— —	25.16 639	25.16 639	25.16 639

Motor					
	VU51		**VU6**		
	DV160L	**DV180**	**DV180**	**DV200**	**DV225**
AB	10.04 255	10.55 268	10.55 268	11.81 300	11.97 304
L	19.80 503	22.64 575	22.64 575	24.53 623	28.54 725
P	13.03 331	13.03 331	13.03 331	15.51 394	15.51 394

Dimension AB is to motor conduit box
Eye bolts are removable
Size VU6 is supplied with windless-type control
See page 62 for VARIGEAR® configuration options.
See page 271 for available output shaft options.

آتور صنعت
ATOORSANAT

VU

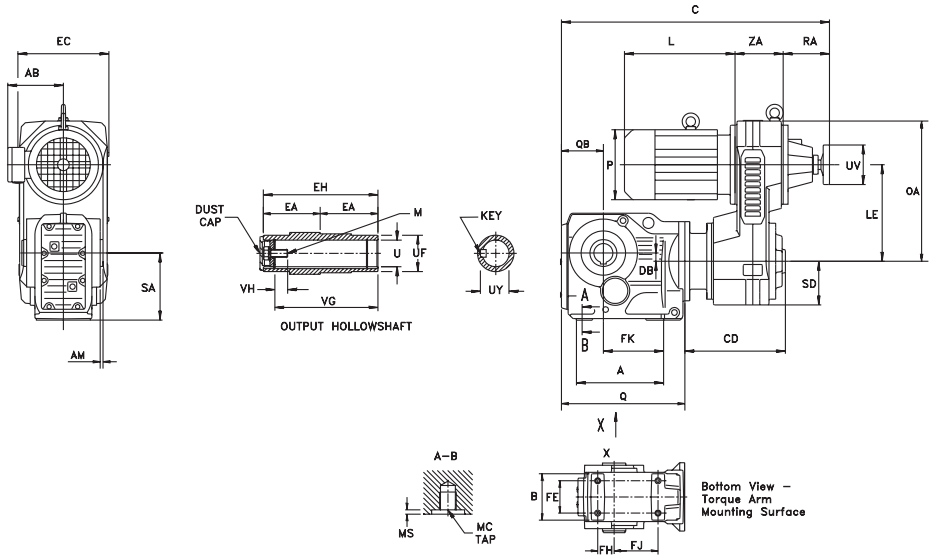

VZ

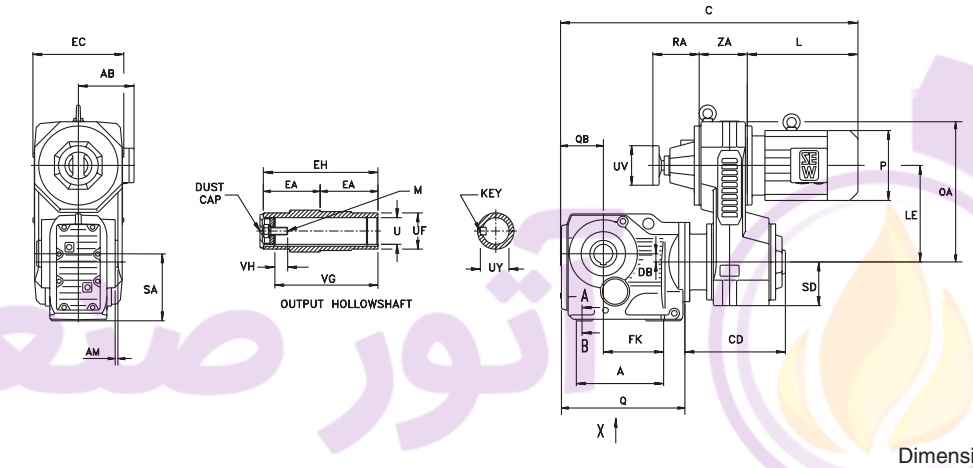

Dimensions are $\frac{\text{inch}}{\text{mm}}$

Gearcase													
Model	**A**	**AM**	**B**	**DB**	**EA**	**FE**	**FH**	**FJ**	**FK**	**MC**	**MS**	**Q**	**QB**	**SA**
KA37	5.79 147	0.10 2.5	3.94 100	0.33 8.5	2.36 60	2.36 60	1.38 35	3.23 82	3.82 97	M10 x .79 M10 x 20	0.16 4	8.27 210	2.80 71	3.94 100
KA47	6.69 170	0.12 3	4.33 110	0.28 7.2	2.95 75	2.76 70	1.57 40	3.94 100	4.53 115	M10 x .79 M10 x 20	0.16 4	9.57 243	3.03 77	4.41 112
KA57	7.17 182	0.12 3	4.80 122	0.52 13.1	3.27 83	3.46 88	1.85 47	4.13 105	4.72 120	M12 x .98 M12 x 25	0.20 5	10.59 269	3.78 96	5.20 132
KA67	7.17 182	0.14 3.5	5.12 130	0.79 20	3.54 90	3.46 88	1.65 42	4.33 110	4.92 125	M12 x .98 M12 x 25	0.20 5	10.75 273	3.70 94	5.51 140

Output Shaft								
Model	**EH**	**U***	**UF**	**UY**	**VG**	**VH**	**Key**	**M**
KA37	4.72 120	1.250 30	1.77 45	1.37 33.3	4.13 105	0.67 17	$\frac{1}{4} \times \frac{1}{4} \times 1\frac{11}{16}$ 8 x 7 x 40	$\frac{7}{16} - 14 \times 1$ M10 x 25
KA47	5.91 150	1.375 35	1.97 50	1.52 38.3	5.20 132	0.65 22	$\frac{5}{16} \times \frac{5}{16} \times 1\frac{13}{16}$ 10 x 8 x 45	$\frac{1}{2} - 13 \times 1$ M12 x 30
KA57	7.09 180	1.500 40	2.17 55	1.67 43.3	6.14 156	1.36 29	$\frac{3}{8} \times \frac{3}{8} \times 2\frac{1}{4}$ 12 x 8 x 50	$\frac{5}{8} - 11 \times 1\frac{3}{4}$ M16 x 40
KA67	7.09 180	1.500 40	2.17 55	1.67 43.3	6.14 156	1.36 29	$\frac{3}{8} \times \frac{3}{8} \times 2\frac{1}{4}$ 12 x 8 x 50	$\frac{5}{8} - 11 \times 1\frac{3}{4}$ M16 x 40

*** Note: See page 18 for tolerances.**
For solid shaft design see page 271.

Dimensions subject to change without notice.

آتور صنعت ATOORSANAT
SEW EURODRIVE

VARIGEAR®							
Model	**EC**	**LE**	**OA**	**RA**	**SD**	**UV**	**ZA**
VU/VZ01	6.93 176	7.17 182	10.59 269	3.86 98	2.83 72	3.15 80	3.15 80
VU/VZ11	7.20 183	9.13 232	12.68 322	4.61 117	3.46 88	3.94 100	3.86 98
VU/VZ21	8.94 227	9.65 245	13.98 355	5.12 130	4.33 110	3.94 100	4.72 120
VU/VZ31	11.14 283	12.01 305	17.52 445	5.91 150	5.43 138	4.92 125	5.98 152

VARIGEAR® VU								
Model		**VU01**		**VU11**	**VU21**	**VU31**		
		DT71	**DT80**	**DT90**	**DT100**	**DT100**	**DV112M**	**DV132S**
KA37	**C**	19.76 502	19.76 502	21.54 547	— —	— —	— —	— —
	CD	8.39 213	8.39 213	9.37 238	— —	— —	— —	— —
KA47	**C**	20.79 528	20.79 528	22.56 573	25.20 640	28.23 717	28.23 717	28.23 717
	CD	8.11 206	8.11 206	9.13 232	10.98 279	13.03 331	13.03 331	13.03 331
KA57	**C**	21.81 554	21.81 554	23.58 599	26.22 666	29.25 743	29.25 743	29.25 743
	CD	8.11 206	8.11 206	9.13 232	10.98 279	13.03 331	13.03 331	13.03 331
KA67	**C**	21.97 558	21.97 558	23.74 603	26.38 670	29.41 747	29.41 747	29.41 747
	CD	8.11 206	8.11 206	9.13 232	10.98 279	13.03 331	13.03 331	13.03 331

VARIGEAR® VZ								
Model		**VZ01**		**VZ11**	**VZ21**	**VZ31**		
		DT71	**DT80**	**DT90**	**DT100**	**DT100**	**DV112M**	**DV132S**
KA37	**C**	20.98 533	22.95 583	24.92 633	— —	— —	— —	— —
	CD	8.39 213	8.39 213	9.37 238	— —	— —	— —	— —
KA47	**C**	22.01 559	23.98 609	25.94 659	28.78 731	30.12 765	31.61 803	33.39 848
	CD	8.11 206	8.11 206	9.13 232	10.98 279	13.03 331	13.03 331	13.03 331
KA57	**C**	23.03 585	25.00 635	26.97 685	29.80 757	31.14 791	32.64 829	34.41 874
	CD	8.11 206	8.11 206	9.13 232	10.98 279	13.03 331	13.03 331	13.03 331
KA67	**C**	23.19 589	25.16 639	27.13 689	29.96 761	31.30 795	32.80 833	34.57 878
	CD	8.11 206	8.11 206	9.13 232	10.98 279	13.03 331	13.03 331	13.03 331

Motor							
	VU/VZ01		**VU/VZ11**	**VU/VZ21**	**VU/VZ31**		
	DT71	**DT80**	**DT90**	**DT100**	**DT100**	**DV112M**	**DV132S**
AB	5.43 138	5.43 138	6.73 171	6.89 175	6.89 175	7.40 188	7.40 188
L	7.95 202	9.92 252	10.75 273	12.24 311	12.24 311	13.74 349	15.51 394
P	5.71 145	5.71 145	7.76 197	7.76 197	7.76 197	8.70 221	8.70 221

Dimension AB is to motor conduit box
Eye bolts are removable
Size VU6 is supplied with windless-type control
See page 62 for VARIGEAR® configuration options.
See page 271 for available output shaft options.

Dimensions subject to change without notice.

VU

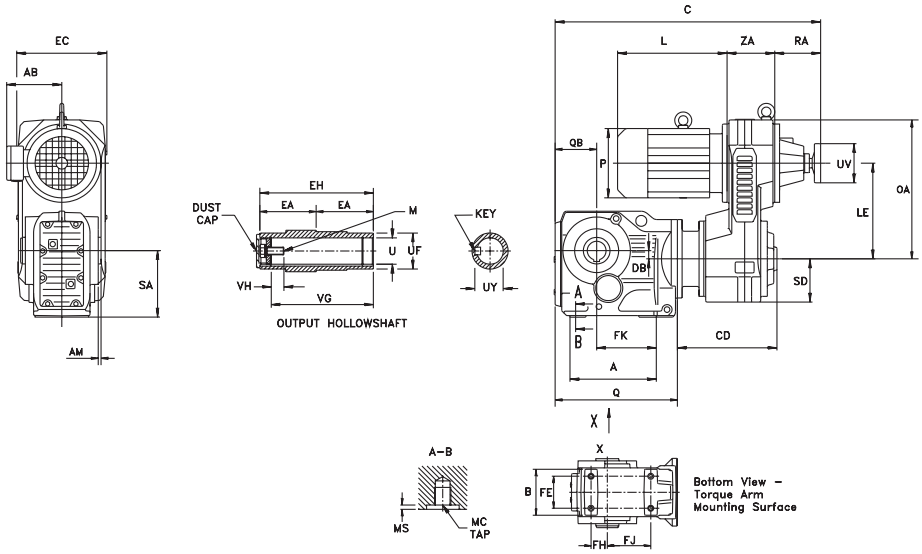

VZ

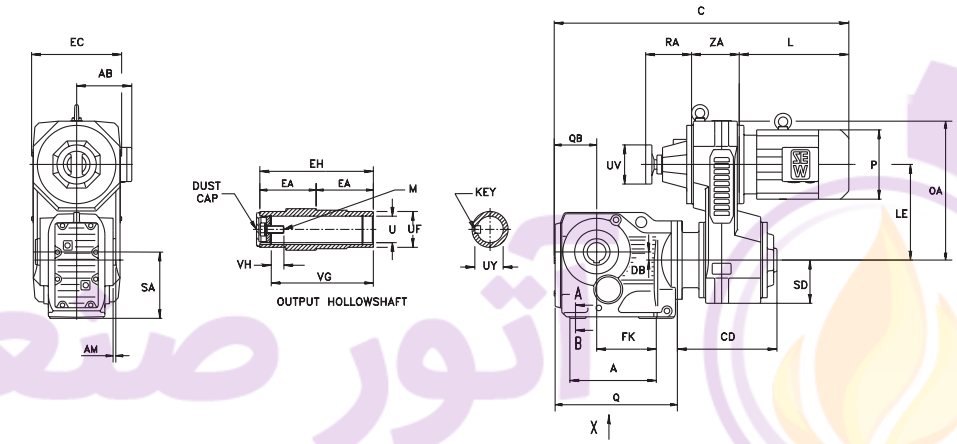

Dimensions are $\frac{\text{inch}}{\text{mm}}$

Gearcase														
Model	**A**	**AM**	**B**	**DB**	**EA**	**FE**	**FH**	**FJ**	**FK**	**MC**	**MS**	**Q**	**QB**	**SA**
KA77	8.03	0.16	6.06	1.23	4.13	4.02	1.89	4.80	5.47	M16 x 1.26	0.24	12.24	4.29	7.09
	204	4	154	31.3	105	102	48	122	139	M16 x 32	6	311	109	180
KA87	10.83	0.16	6.69	1.02	4.72	4.65	2.56	6.30	7.48	M16 x 1.26	0.24	15.31	5.20	8.35
	275	4	170	25.9	120	118	65	160	190	M16 x 32	6	389	132	212
KA97	11.73	0.16	8.90	1.27	5.91	6.30	3.27	6.50	7.48	M20 x 1.42	0.24	17.13	6.22	10.43
	298	4	226	32.3	150	160	83	165	190	M20 x 36	6	435	158	265
KA107	14.57	0.10	10.47	2.05	6.89	7.48	3.94	7.48	9.06	M24 x 1.73	0.31	21.14	7.72	12.40
	370	2.5	266	52	175	190	100	190	230	M24 x 44	8	537	196	315

Output Shaft								
Model	**EH**	**U***	**UF**	**UY**	**VG**	**VH**	**Key**	**M**
KA77	8.27	2.000	2.76	2.22	7.20	1.16	$\frac{1}{2} \times \frac{1}{2} \times 2\frac{5}{8}$	$\frac{5}{8} - 11 \times 1\frac{3}{4}$
	210	50	70	53.8	183	32	14 x 9 x 80	M16 x 45
KA87	9.45	2.375	3.35	2.65	8.27	1.39	$\frac{5}{8} \times \frac{5}{8} \times 3\frac{5}{8}$	$\frac{3}{4} - 10 \times 2$
	240	60	85	64.4	210	36	18 x 11 x 100	M20 x 50
KA97	11.81	2.750	3.74	3.03	10.63	1.24	$\frac{5}{8} \times \frac{5}{8} \times 3\frac{5}{8}$	$\frac{3}{4} - 10 \times 2$
	300	70	95	74.9	270	34	20 x 12 x 110	M20 x 50
KA107	13.78	3.625	4.65	3.89	12.32	1.24	$\frac{7}{8} \times \frac{5}{8} \times 3\frac{1}{2}$	$\frac{3}{4} - 10 \times 2$
	350	90	118	95.4	313	40	25 x 14 x 160	M24 x 60

*** Note: See page 18 for tolerances.**
For solid shaft design see page 271.

Dimensions subject to change without notice.

آتور صنعت ATOORSANAT SEW EURODRIVE

VARIGEAR®							
Model	**EC**	**LE**	**OA**	**RA**	**SD**	**UV**	**ZA**
VU/VZ11	7.20 183	9.13 232	12.68 322	4.61 117	3.46 88	3.94 100	3.86 98
VU/VZ21	8.94 227	9.65 245	13.98 355	5.12 130	4.33 110	3.94 100	4.72 120
VU/VZ31	11.14 283	12.01 305	17.52 445	5.91 150	5.43 138	4.92 125	5.98 152
VU/VZ41	13.70 348	14.96 380	21.77 553	7.44 189	6.69 170	7.87 200	7.09 180
VU51	15.67 398	18.11 460	25.91 658	8.66 220	7.68 195	7.87 200	7.87 200
VU6	18.94 481	22.60 574	31.69 805	6.10 155	9.65 245	15.16 385	8.43 214

VARIGEAR® VU														
Model		**VU11**	**VU21**	**VU31**			**VU41**			**VU51**		**VU6**		
		DT90	**DT100**	**DT100**	**DV112M**	**DV132S**	**DV132M**	**DV132ML**	**DV160M**	**DV160L**	**DV180**	**DV180**	**DV200**	**DV225**
KA77	**C**	25.00 635	27.56 700	30.55 776	30.55 776	30.55 776	35.00 889	35.00 889	35.00 889	— —	— —	— —	— —	— —
	CD	8.90 226	10.67 271	12.68 322	12.68 322	12.68 322	15.63 397	15.63 397	15.63 397	— —	— —	— —	— —	— —
KA87	**C**	— —	30.47 774	33.43 849	33.43 849	33.43 849	37.87 962	37.87 962	37.87 962	41.18 1046	41.18 1046	— —	— —	— —
	CD	— —	10.51 267	12.48 317	12.48 317	12.48 317	15.43 392	15.43 392	15.43 392	17.68 449	17.68 449	— —	— —	— —
KA97	**C**	— —	— —	35.04 890	35.04 890	35.04 890	39.49 1003	39.49 1003	39.49 1003	42.80 1087	42.80 1087	— —	— —	— —
	CD	— —	— —	12.28 312	12.28 312	12.28 312	15.24 387	15.24 387	15.24 387	17.48 444	17.48 444	— —	— —	— —
KA107	**C**	— —	— —	— —	— —	— —	43.27 1099	43.27 1099	43.27 1099	46.57 1183	46.57 1183	48.90 1242	48.90 1242	48.90 1242
	CD	— —	— —	— —	— —	— —	15.00 381	15.00 381	15.00 381	17.24 438	17.24 438	26.06 662	26.06 662	26.06 662

VARIGEAR® VZ									
Model		**VZ11**	**VZ21**	**VZ31**			**VZ41**		
		DT90	**DT100**	**DT100**	**DV112M**	**DV132S**	**DV132M**	**DV132ML**	**DV160M**
KA77	**C**	28.39 721	31.14 791	32.44 824	33.94 862	35.71 907	37.48 952	39.84 1012	39.84 1012
	CD	8.90 226	10.67 271	12.68 322	12.68 322	12.68 322	15.63 397	15.63 397	15.63 397
KA87	**C**	— —	34.06 865	35.31 897	36.81 935	38.58 980	40.35 1025	42.72 1085	42.72 1085
	CD	— —	10.51 267	12.48 317	12.48 317	12.48 317	15.43 392	15.43 392	15.43 392
KA97	**C**	— —	— —	36.93 938	38.43 976	40.20 1021	41.97 1066	44.33 1126	44.33 1126
	CD	— —	— —	12.28 312	12.28 312	12.28 312	15.24 387	15.24 387	15.24 387
KA107	**C**	— —	— —	— —	— —	— —	45.75 1162	48.11 1222	48.11 1222
	CD	— —	— —	— —	— —	— —	15.00 381	15.00 381	15.00 381

Motor													
	VU/VZ11	**VU/VZ21**	**VU/VZ31**			**VU/VZ41**			**VU51**		**VU6**		
	DT90	**DT100**	**DT100**	**DV112M**	**DV132S**	**DV132M**	**DV132ML**	**DV160M**	**DV160L**	**DV180**	**DV180**	**DV200**	**DV225**
AB	6.73 171	6.89 175	6.89 175	7.40 188	7.40 188	9.13 232	9.13 232	9.13 232	10.04 255	10.55 268	10.55 268	11.81 300	11.97 304
L	10.75 273	12.24 311	12.24 311	13.74 349	15.51 394	15.83 402	18.19 462	18.19 462	19.80 503	22.64 575	22.64 575	24.53 623	28.54 725
P	7.76 197	7.76 197	7.76 197	8.70 221	8.70 221	10.83 275	10.83 275	10.83 275	13.03 331	13.03 331	13.03 331	15.51 394	15.51 394

Dimension AB is to motor conduit box
Size VU6 is supplied with windless-type control.

Eye bolts are removable
See page 62 for VARIGEAR® configuration options and page 271 for available output shaft options.

Dimensions subject to change without notice.

VU

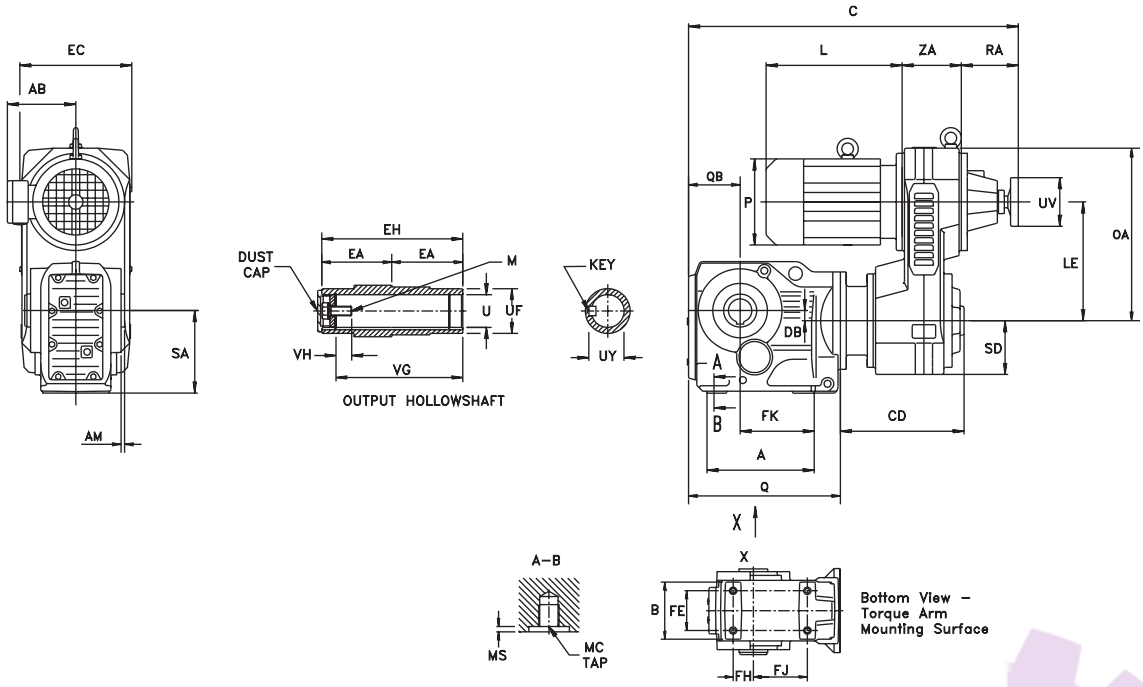

VZ

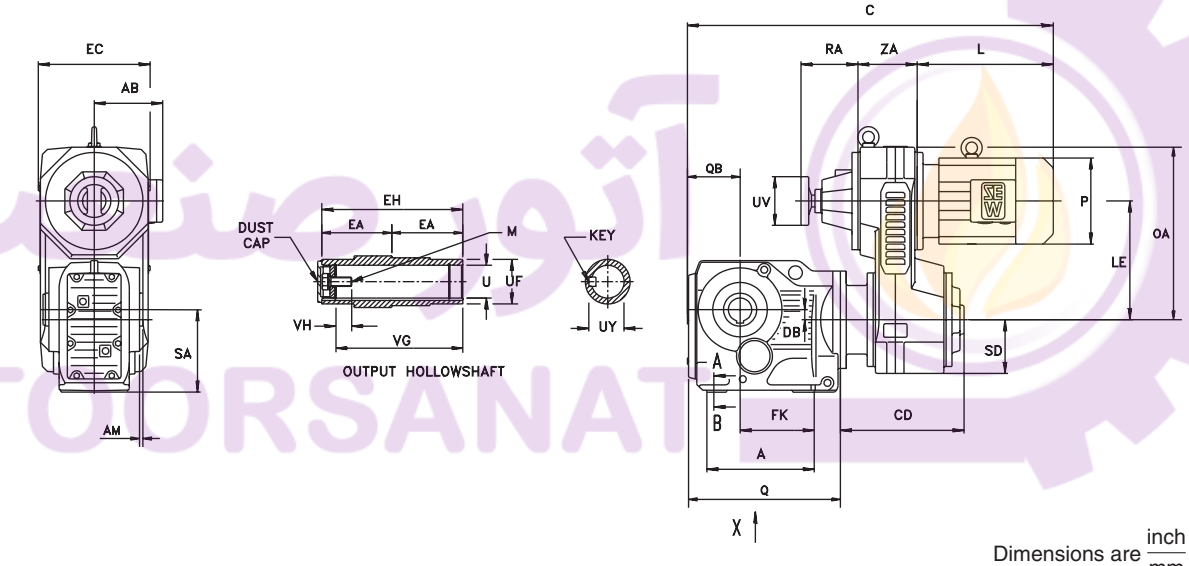

Dimensions are inch / mm

Gearcase																		
Model	**A**	**AC**	**AM**	**B**	**D***	**DB**	**E**	**EA**	**EJ**	**F**	**FA**	**FB**	**G**	**H**	**J**	**JA**	**Q**	**QB**
KA127	17.32 440	20.71 526	0.10 2.5	15.75 400	14.76 375	2.09 53	13.78 350	8.07 205	16.54 420	12.99 330	4.53 115	4.33 110	1.77 45	1.54 39	3.94 100	4.37 111	24.21 615	8.86 225
KA157	18.90 480	24.96 634	— —	19.69 500	17.72 450	2.82 71.7	14.96 380	9.84 250	19.69 500	16.54 420	5.51 140	5.12 130	1.97 50	1.54 39	3.94 100	5.12 130	27.80 706	11.02 280

Output Shaft								
Model	**EH**	**U***	**UF**	**UY**	**VG**	**VH**	**Key**	**M**
KA127	16.14 410	4.000 100	5.31 135	4.44 106.4	14.69 373	1.26 38	1× 1× 6 28 x 16 x 180	1– 8 × 2 1/4 M24 x 60
KA157	19.69 500	4.500 120	6.10 155	4.95 127.4	18.11 460	1.26 36	1× 1× 6 32 x 18 x 200	1– 8 × 2 1/4 M24 x 60

*** Note: See page 18 for tolerances.**
For solid shaft design see page 271.

Dimensions subject to change without notice.

آتور صنعت ATOORSANAT
SEW EURODRIVE

VARIGEAR®							
Model	**EC**	**LE**	**OA**	**RA**	**SD**	**UV**	**ZA**
VU51	15.67 398	18.11 460	25.91 658	8.66 220	7.68 195	7.87 200	7.87 200
VU6	18.94 481	22.60 574	31.69 805	6.10 155	9.65 245	15.16 385	8.43 214

VARIGEAR® VU						
Model		**VU51**		**VU6**		
		DV160L	**DV180**	**DV180**	**DV200**	**DV225**
KA127	**C**	49.06 1246	49.06 1246	51.38 1305	51.38 1305	51.38 1305
	CD	16.65 423	16.65 423	25.47 647	25.47 647	25.47 647
KA157	**C**	— —	— —	55.94 1421	55.94 1421	55.94 1421
	CD	— —	— —	25.16 639	25.16 639	25.16 639

Motor					
	VU51		**VU6**		
	DV160L	**DV180**	**DV180**	**DV200**	**DV225**
AB	10.04 255	10.55 268	10.55 268	11.81 300	11.97 304
L	19.80 503	22.64 575	22.64 575	24.53 623	28.54 725
P	13.03 331	13.03 331	13.03 331	15.51 394	15.51 394

Dimension AB is to motor conduit box
Eye bolts are removable
Size VU6 is supplied with windless-type control
See page 62 for VARIGEAR® configuration options.
See page 271 for available output shaft options.

آتور صنعت
ATOORSANAT

2. Shaft Mounted with Feet

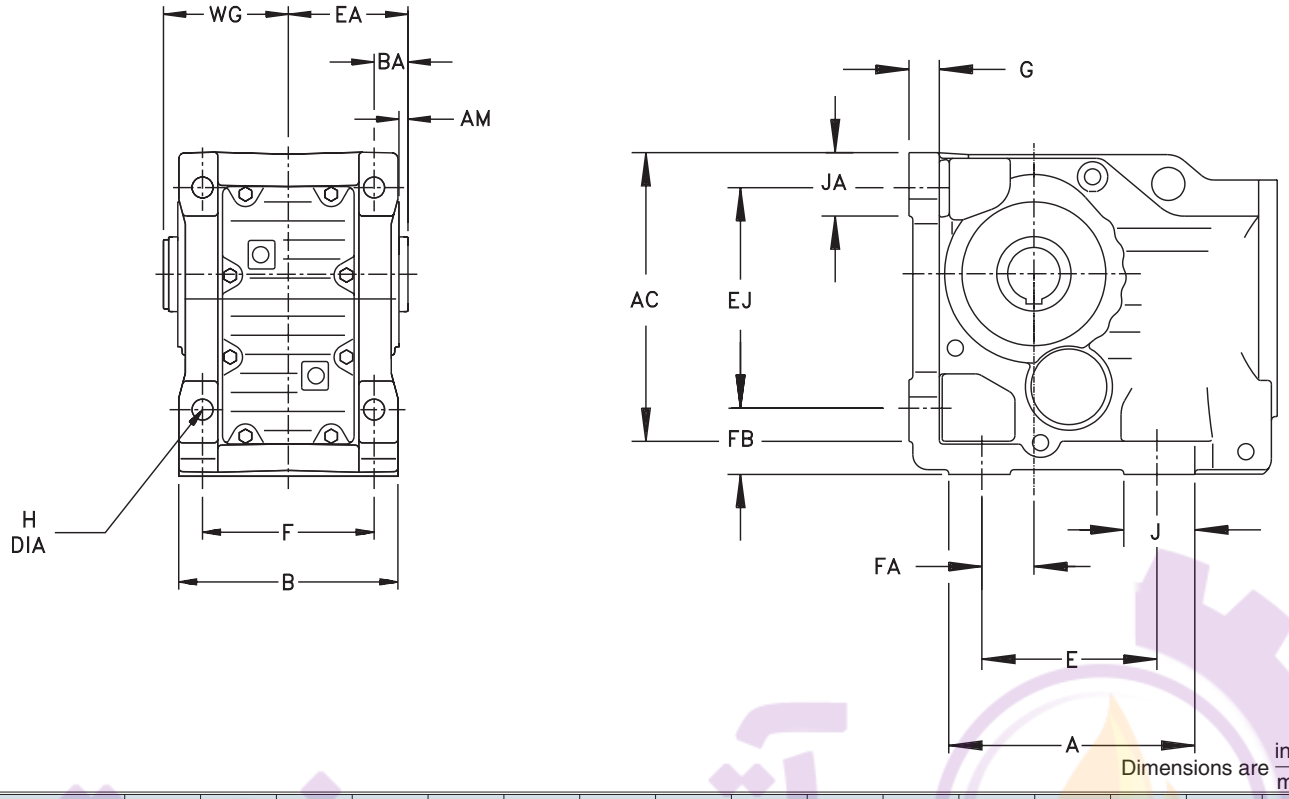

Model	A	AC	AM	B	BA	E	EA	EJ	F	FA	FB	G	H	J	JA	WG
KA47B..	6.38 162	6.69 170	0.10 2.5	5.71 145	0.59 15	5.12 130	2.95 75	5.12 130	4.72 120	1.38 35	1.46 37	0.71 18	0.43 11	1.38 35	1.46 37	3.07 78
KA57B..	6.77 172	7.48 190	0.12 3	6.18 157	0.71 18	5.12 130	3.27 83	5.91 150	5.12 130	1.18 30	1.77 45	0.83 21	0.53 13.5	1.57 40	1.69 43	3.39 86
KA67B..	6.69 170	7.99 203	0.14 3.5	6.69 170	0.79 20	4.72 120	3.54 90	6.30 160	5.51 140	1.18 30	1.77 45	0.94 24	0.53 13.5	2.17 55	1.69 43	3.66 93
KA77B..	8.19 208	10.35 263	0.16 4	7.87 200	0.89 22.5	5.91 150	4.13 105	7.87 200	6.50 165	1.57 40	2.17 55	1.06 27	0.69 17.5	2.17 55	2.17 55	4.25 108
KA87B..	10.24 260	12.01 305	0.16 4	9.06 230	1.18 30	7.09 180	4.72 120	9.17 233	7.09 180	2.17 55	2.76 70	1.26 32	0.87 22	2.95 75	2.64 67	4.84 123
KA97B..	11.57 294	14.65 372	0.16 4	11.42 290	1.18 30	9.45 240	5.91 150	11.61 295	9.45 240	2.95 75	2.95 75	1.42 36	1.02 26	2.36 60	3.23 82	6.02 153
KA107B..	14.96 380	17.64 448	0.10 2.5	13.39 340	1.57 40	11.02 280	6.89 175	14.17 360	10.63 270	3.74 95	3.74 95	1.57 40	1.30 33	3.94 100	3.86 98	7.01 178
KA127B..	17.32 440	20.71 526	0.10 2.5	15.75 400	1.57 40	13.78 350	8.07 205	16.54 420	12.99 330	4.53 115	4.33 110	1.77 45	1.54 39	3.94 100	4.37 111	8.19 208
KA157B..	18.90 480	24.96 634	— —	19.69 500	1.57 40	14.96 380	9.84 250	19.69 500	16.54 420	5.51 140	5.12 130	1.97 50	1.54 39	3.94 100	5.12 130	9.96 253

Consult appropriate VARIGEAR® with Helical-Bevel dimension pages for additional dimensions.

Dimensions subject to change without notice.

آتور صنعت ATOORSANAT SEW EURODRIVE

3.Shrink Disc Mounted

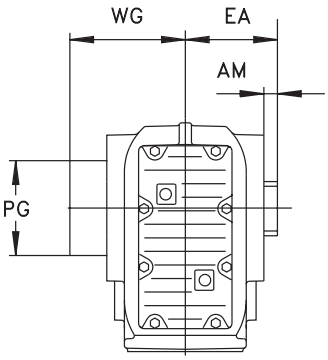

KH37 – KH107

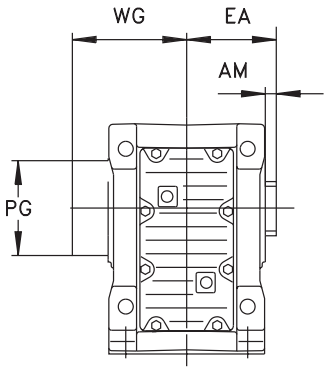

KH127 – KH157

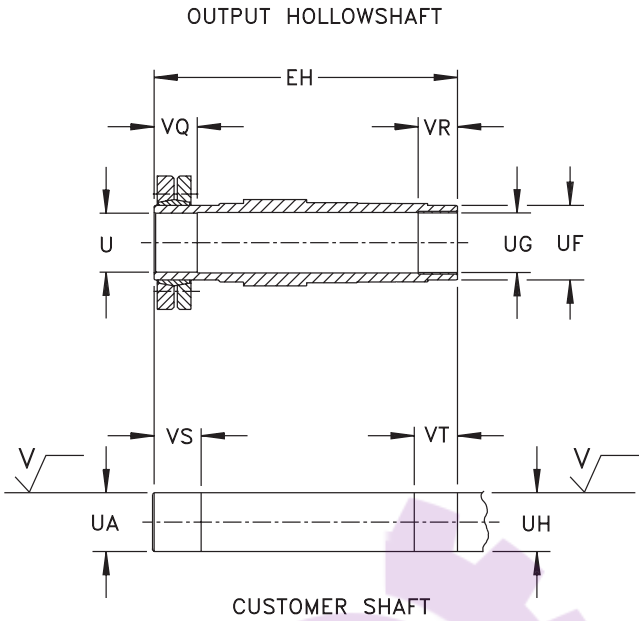

$$\sqrt{V} = \sqrt[125]{\mu in\ R_a} = \sqrt[3.2]{\mu m\ R_a}$$

Dimensions are $\frac{\text{inch}}{\text{mm}}$

Model	Gearcase				Shrink Disc										
	AM	EA	PG	WG	EH	U[1] *	UA[1] *	UF	UG[1] *	UH[1] *	VR	VQ	VS	VT	M_a[2]
KH37..	0.10 2.5	2.36 60	3.07 78	3.74 95	5.75 146	— 30	— 30	1.77 45	— 30	— 30	0.79 20	1.22 31	1.42 36	0.98 25	5130
KH47..	0.12 3	2.95 75	3.46 88	4.39 111.5	6.97 177	— 35	— 35	1.97 50	— 35	— 35	0.79 20	1.26 32	1.46 37	0.98 25	8410
KH57..	0.12 3	3.27 83	3.94 100	5.08 129	7.68 195	— 40	— 40	2.17 55	— 40	— 40	0.79 20	1.02 26	1.22 31	0.98 25	14600
KH67..	0.14 3.5	3.54 90	3.94 100	5.08 129	8.19 208	— 40	— 40	2.17 55	— 40	— 40	0.79 20	1.50 38	1.69 43	0.98 25	14600
KH77..	0.16 4	4.13 105	4.76 121	5.79 147	9.49 241	— 50	— 50	2.76 70	— 50	— 50	1.18 30	1.42 36	1.61 41	1.38 35	28300
KH87..	0.16 4	4.72 120	6.46 164	6.77 172	11.06 281	— 65	— 65	3.35 85	— 65	— 65	1.57 40	1.61 41	1.81 46	1.77 45	53100
KH97..	0.16 4	5.91 150	7.28 185	8.29 210.5	13.58 345	— 75	— 75	3.74 95	— 75	— 75	1.97 50	2.17 55	2.36 60	2.17 55	79700
KH107..	0.10 2.5	6.89 175	7.87 200	9.65 245	15.94 405	— 95	— 95	4.65 118	— 95	— 95	2.36 60	2.56 65	2.95 75	2.76 70	132800
KH127..	0.10 2.5	8.07 205	9.17 233	11.65 296	19.09 485	— 105	— 105	5.31 135	— 105	— 105	2.76 70	3.35 85	3.74 95	3.15 80	241600
KH157..	0.00 0	9.84 250	12.40 315	14.57 370	22.83 580	— 125	— 125	6.10 155	— 125	— 125	3.15 80	3.54 90	3.94 100	3.54 90	395900

Consult appropriate VARIGEAR® with Helical-Bevel dimension pages for additional dimensions.
[1] Previous KA../S gear units (i.e. KA66) had different values
[2] Maximum transmissible torque, in lb-in, of the shink disc
*** Note: See page 18 for tolerances.**

4. Shrink Disc Mounted with Feet

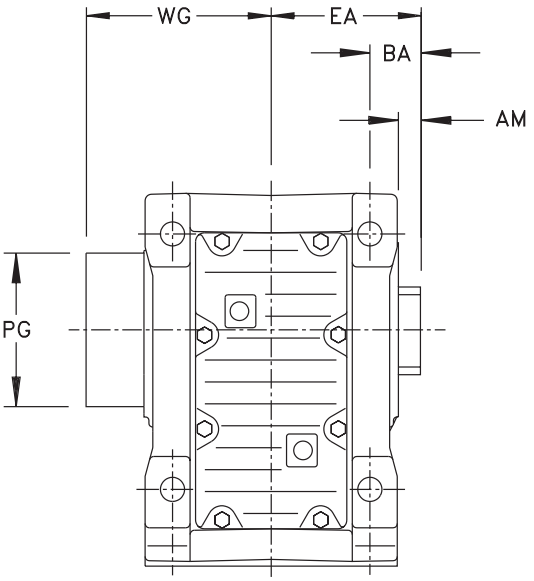

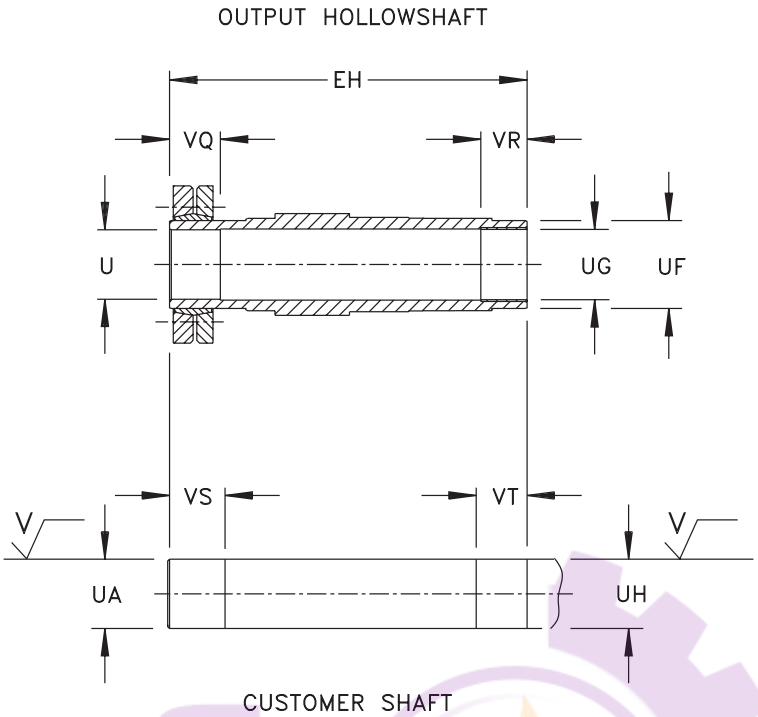

$$\sqrt{V} = \sqrt[125]{\mu in \ R_a} = \sqrt[3.2]{\mu m \ R_a}$$

Dimensions are inch / mm

Model	Gearcase					Shrink Disc										
	AM	BA	EA	PG	WG	EH	U[1)] *	UA[1)] *	UF	UG[1)] *	UH[1)] *	VR	VQ	VS	VT	M_a [2)]
KH47B..	0.10 2.5	0.59 15	2.95 75	3.46 88	4.39 111.5	6.97 177	— 35	— 35	1.97 50	— 35	— 35	0.79 20	1.26 32	1.46 37	0.98 25	8410
KH57B..	0.12 3	0.71 18	3.27 83	3.94 100	5.08 129	7.68 195	— 40	— 40	2.17 55	— 40	— 40	0.79 20	1.02 26	1.22 31	0.98 25	14600
KH67B..	0.14 3.5	0.79 20	3.54 90	3.94 100	5.08 129	8.19 208	— 40	— 40	2.17 55	— 40	— 40	0.79 20	1.50 38	1.69 43	0.98 25	14600
KH77B..	0.16 4	0.89 22.5	4.13 105	4.76 121	5.79 147	9.49 241	— 50	— 50	2.76 70	— 50	— 50	1.18 30	1.42 36	1.61 41	1.38 35	28300
KH87B..	0.16 4	1.18 30	4.72 120	6.46 164	6.77 172	11.06 281	— 65	— 65	3.35 85	— 65	— 65	1.57 40	1.61 41	1.81 46	1.77 45	53100
KH97B..	0.16 4	1.18 30	5.91 150	7.28 185	8.29 210.5	13.58 345	— 75	— 75	3.74 95	— 75	— 75	1.97 50	2.17 55	2.36 60	2.17 55	79700
KH107B..	0.10 2.5	1.57 40	6.89 175	7.87 200	9.65 245	15.94 405	— 95	— 95	4.65 118	— 95	— 95	2.36 60	2.56 65	2.95 75	2.76 70	132800
KH127B..	0.10 2.5	1.57 40	8.07 205	9.17 233	11.65 296	19.09 485	— 105	— 105	5.31 135	— 105	— 105	2.76 70	3.35 85	3.74 95	3.15 80	241600
KH157B..	0.00 0	1.57 40	9.84 250	12.40 315	14.57 370	22.83 580	— 125	— 125	6.10 155	— 125	— 125	3.15 80	3.54 90	3.94 100	3.54 90	395900

Consult appropriate VARIGEAR® with Helical-Bevel dimension pages for additional dimensions.
[1)] Previous KA../S gear uinits (i.e. KA66) had different values.
[2)] Maximum transmissible torque, in lb-in, of the shrink disc.
*** Note: See page 18 for tolerances.**

Dimensions subject to change without notice.

آتور صنعت ATOORSANAT SEW EURODRIVE

5. Flange Mounted with Shrink Disc

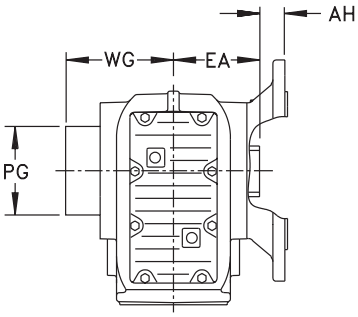

KHF37 – KHF107

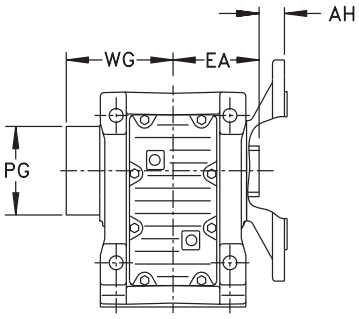

KHF127 – KHF157

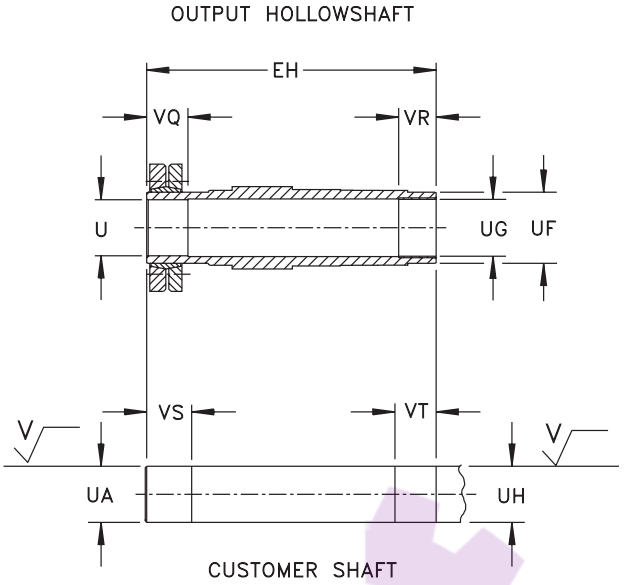

$$\sqrt{V} = \sqrt[125]{\mu in\ R_a} = \sqrt[3.2]{\mu m\ R_a}$$

Dimensions are $\frac{\text{inch}}{\text{mm}}$

Model	Gearcase				Shrink Disc										
	AH	EA	PG	WG	EH	U[1)] *	UA[1)] *	UF	UG[1)] *	UH[1)] *	VR	VQ	VS	VT	M_a[2)]
KHF37..	0.94 24	2.36 60	3.07 78	3.74 95	5.75 146	— 30	— 30	1.77 45	— 30	— 30	0.79 20	1.22 31	1.42 36	0.98 25	5130
KHF47..	0.98 25	2.95 75	3.46 88	4.39 111.5	6.97 177	— 35	— 35	1.97 50	— 35	— 35	0.79 20	1.26 32	1.46 37	0.98 25	8410
KHF57..	0.93 23.5	3.27 83	3.94 100	5.08 129	7.68 195	— 40	— 40	2.17 55	— 40	— 40	0.79 20	1.02 26	1.22 31	0.98 25	14600
KHF67V..	0.91 23	3.54 90	3.94 100	5.08 129	8.19 208	— 40	— 40	2.17 55	— 40	— 40	0.79 20	1.50 38	1.69 43	0.98 25	14600
KHF77..	1.46 37	4.13 105	4.76 121	5.79 147	9.49 241	— 50	— 50	2.76 70	— 50	— 50	1.18 30	1.42 36	1.61 41	1.38 35	28300
KHF87..	1.18 30	4.72 120	6.46 164	6.77 172	11.06 281	— 65	— 65	3.35 85	— 65	— 65	1.57 40	1.61 41	1.81 46	1.77 45	53100
KHF97..	1.63 41.5	5.91 150	7.28 185	8.29 210.5	13.58 345	— 75	— 75	3.74 95	— 75	— 75	1.97 50	2.17 55	2.36 60	2.17 55	79700
KHF107..	1.61 41	6.89 175	7.87 200	9.65 245	15.94 405	— 95	— 95	4.65 118	— 95	— 95	2.36 60	2.56 65	2.95 75	2.76 70	132800
KHF127..	2.01 51	8.07 205	9.17 233	11.65 296	19.09 485	— 105	— 105	5.31 135	— 105	— 105	2.76 70	3.35 85	3.74 95	3.15 80	241600
KHF157..	2.36 60	9.84 250	12.40 315	14.57 370	22.83 580	— 125	— 125	6.10 155	— 125	— 125	3.15 80	3.54 90	3.94 100	3.54 90	395900

Consult appropriate VARIGEAR® with Helical-Bevel dimension pages for additional dimensions.
[1)] Previous KAF../S gear units (i.e. KA66) had different values
[2)] Maximum transmissible torque, in lb-in, of the shrink disc
*** Note: See page 18 for tolerances.**

6. Face Mounted with Shrink Disc

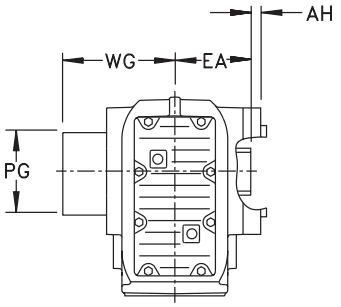

KHZ37 – KHZ107

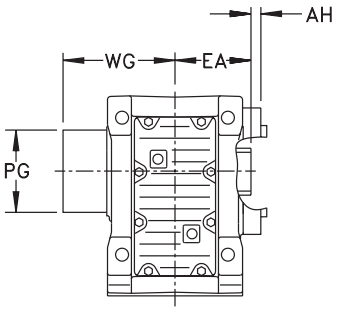

KHZ127 – KHZ157

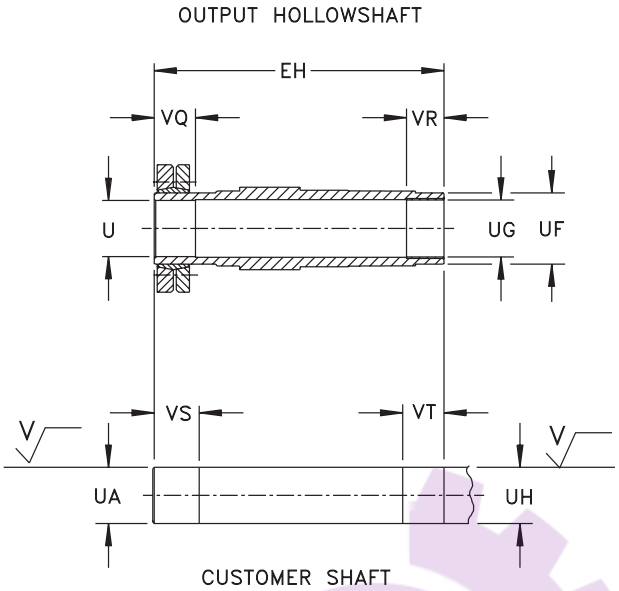

$$\sqrt{V} = \sqrt[125]{\mu in\ R_a} = \sqrt[3.2]{\mu m\ R_a}$$

Dimensions are inch / mm

Model	Gearcase				Shrink Disc										
	AH	EA	PG	WG	EH	U *	UA *	UF	UG *	UH *	VR	VQ	VS	VT	M_a [1]
KHZ37..	0.35 9	2.36 60	3.07 78	3.74 95	5.75 146	— 30	— 30	1.77 45	— 30	— 30	0.79 20	1.22 31	1.42 36	0.98 25	5130
KHZ47..	0.31 8	2.95 75	3.46 88	4.39 111.5	6.97 177	— 35	— 35	1.97 50	— 35	— 35	0.79 20	1.26 32	1.46 37	0.98 25	8410
KHZ57..	0.35 9	3.27 83	3.94 100	5.08 129	7.68 195	— 40	— 40	2.17 55	— 40	— 40	0.79 20	1.02 26	1.22 31	0.98 25	14600
KHZ67..	0.33 8.5	3.54 90	3.94 100	5.08 129	8.19 208	— 40	— 40	2.17 55	— 40	— 40	0.79 20	1.50 38	1.69 43	0.98 25	14600
KHZ77..	0.39 10	4.13 105	4.76 121	5.79 147	9.49 241	— 50	— 50	2.76 70	— 50	— 50	1.18 30	1.42 36	1.61 41	1.38 35	28300
KHZ87..	0.43 11	4.72 120	6.46 164	6.77 172	11.06 281	— 65	— 65	3.35 85	— 65	— 65	1.57 40	1.61 41	1.81 46	1.77 45	53100
KHZ97..	0.55 14	5.91 150	7.28 185	8.29 210.5	13.58 345	— 75	— 75	3.74 95	— 75	— 75	1.97 50	2.17 55	2.36 60	2.17 55	79700
KHZ107..	-0.29 -8	6.89 175	7.87 200	9.65 245	15.94 405	— 95	— 95	4.65 118	— 95	— 95	2.36 60	2.56 65	2.95 75	2.76 70	132800
KHZ127..	0.00 0	8.07 205	9.17 233	11.65 296	19.09 485	— 105	— 105	5.31 135	— 105	— 105	2.76 70	3.35 85	3.74 95	3.15 80	241600
KHZ157..	-0.55 -14	9.84 250	12.40 315	14.57 370	22.83 580	— 125	— 125	6.10 155	— 125	— 125	3.15 80	3.54 90	3.94 100	3.54 90	395900

Consult appropriate VARIGEAR® with Helical-Bevel dimension pages for additional dimensions.

[1] Maximum transmissible torque, in lb-in, of the shrink disc

*** Note: See page 18 for tolerances.**

Dimensions subject to change without notice.

آتور صنعت ATOORSANAT SEW EURODRIVE

7. Available Output Solid Shafts

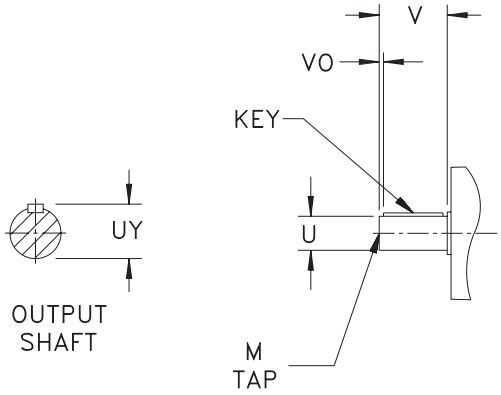

Model	Inch Shafts						Dimensions are inch
	U *	UY	V	VO	Key	M	Change in length[2)]
K/KF37	1.000	1.11	1.97	0.32	1/4 x 1/4 x 1 5/16	3/8 - 16 x 0.87	0
K/KF47	1.250	1.36	2.36	0.26	1/4 x 1/4 x 1 11/16	1/2 - 13 x 1.12	0
K/KF57	1.375	1.51	2.76	0.43	5/16 x 5/16 x 1 13/16	1/2 - 13 x 1.12	0
K/KF67	1.625	1.79	3.15	0.38	3/8 x 3/8 x 2 1/4	5/8 - 11 x 1.38	0
	1.375[1)]	1.51	2.76	0.47	5/16 x 5/16 x 1 13/16	1/2 - 13 x 1.12	-0.39
K/KF77	2.000	2.22	3.94	0.64	1/2 x 1/2 x 2 5/8	3/4 - 10 x 1.61	0
	1.750[1)]	1.92	3.54	0.40	3/8 x 3/8 x 2 3/4	5/8 - 11 x 1.38	-0.39
K/KF87	2.375	2.65	4.72	0.51	5/8 x 5/8 x 3 5/8	3/4 - 10 x 1.61	0
K/KF97	2.875	3.20	5.51	0.67	3/4 x 3/4 x 4 1/8	3/4 - 10 x 1.61	0
K/KF107	3.625	4.01	6.69	0.63	7/8 x 7/8 x 5 3/8	1 - 8 x 2.13	0
K/KF127	4.375	4.82	8.27	1.09	1 x 1 x 6	1 - 8 x 2.13	0
K/KF157	4.750	5.29	8.27	0.82	1 1/4 x 1 1/4 x 6 9/16	1 - 8 x 2.13	0
K167	6.260	6.65	9.84	0.59	1 1/2 x 1 1/2 x7 1/8	1 1/8 - 7 x 2.13	0
K187	7.500	8.27	12.60	.039	1 3/4 x 1 3/4 x 10	1 1/8 - 7 x 2.13	0

Model	Metric Shafts						Dimensions are mm
	U *	UY	V	VO	Key	M	Change in length[2)]
K/KF37	25	28	50	5	8 x 7 x 40	M10 x 22	0
K/KF47	30	33	60	3.5	8 x 7 x 50	M10 x 22	0
K/KF57	35	38	70	7	10 x 8 x 56	M12 x 28	0
K/KF67	40	43	80	5	12 x 8 x 70	M16 x 36	0
	35[1)]	38	70	7	10 x 8 x 56	M12 x 28	-10
K/KF77	50	53.5	100	10	14 x 9 x 80	M16 x 36	0
	45[1)]	48.5	90	5	14 x 9 x 80	M16 x 36	-10
K/KF87	60	64	120	5	18 x 11 x 110	M20 x 42	0
K/KF97	70	74.5	140	7.5	20 x 12 x 125	M20 x 42	0
K/KF107	90	95	170	5	25 x 14 x 160	M24 x 50	0
K/KF127	110	116	210	15	28 x 16 x 180	M24 x 50	0
K/KF157	120	127	210	5	32 x 18 x 200	M24 x 50	0
K167	160	169	250	15	40 x 22 x 220	M30 x 63	0
K187	190	200	320	10	45 x 25 x 300	M30 x 63	0

[1)] Indicated shaft diameter reduces the gearbox torque rating - contact SEW-Eurodrive for details.
[2)] When compared to standard shaft as shown in dimension pages.

*** Note: See page 18 for tolerances.**

ATOORSANAT آتور صنعت

8. Available Output Hollowshafts

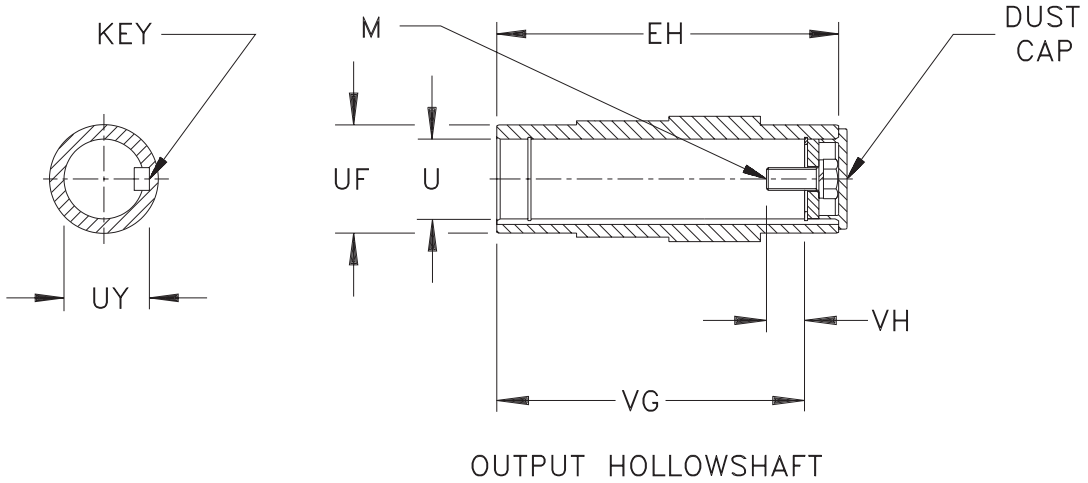

Model	Inch Shafts							Dimensions are inch
	EH	U *	UF	UY	VG	VH	Key	M
KA/KAF/KAZ37	4.72	1.250	1.77	1.37	4.13	0.67	1/4 × 1/4 x 1 11/16	7/16 - 14 x 1
KA/KAF/KAZ47	5.91	1.375	1.97	1.52	5.20	0.65	5/16 x 5/16 x 1 13/16	1/2 - 13 x 1
	5.91	1.250	1.97	1.37	5.20	0.67	1/4 x 1/4 x 1 11/16	7/16 - 14 x 1
KA/KAF/KAZ57	6.54	1.500	2.17	1.67	5.59	1.36	3/8 x 3/8 x 2 1/4	5/8 - 11 x 1 3/4
KA/KAF/KAZ67	7.09	1.500	2.17	1.67	6.14	1.36	3/8 x 3/8 x 2 1/4	5/8 - 11 x 1 3/4
	7.09	1.4375[1)]	2.17	1.61	6.14	1.36	3/8 x 3/8 x 2 1/4	5/8 - 11 x 1 3/4
KA/KAF/KAZ77	8.27	2.000	2.76	2.22	7.20	1.16	1/2 x 1/2 x 2 5/8	5/8 - 11 x 1 3/4
	8.27	1.9375[1)]	2.76	2.16	7.20	1.16	1/2 x 1/2 x 2 5/8	5/8 - 11 x 1 3/4
KA/KAF/KAZ87	9.45	2.375	3.35	2.65	8.27	1.39	5/8 x 5/8 x 3 5/8	3/4 - 10 x 2
	9.45	2.4375[1)]	3.35	2.62	8.27	1.39	5/8 x 7/16 x 3	3/4 - 10 x 2
KA/KAF/KAZ97	11.81	2.750	3.74	3.03	10.63	1.24	5/8 x 5/8 x 3 5/8	3/4 - 10 x 2
	11.81	2.9375[1)]	3.74	3.14	10.63	1.24	3/4 x 1/2 x 3 1/2	3/4 - 10 x 2
KA/KAF/KAZ107	13.78	3.625	4.65	3.89	12.32	1.24	7/8 x 5/8 x 3 1/2	3/4 - 10 x 2
	13.78	3.250	4.65	3.59	12.32	1.24	3/4 x 3/4 x 4 1/8	3/4 - 10 x 2
	13.78	3.4375[1)]	4.65	3.70	12.32	1.24	7/8 x 5/8 x 3 1/2	3/4 - 10 x 2
KA/KAF/KAZ127	16.14	4.000	5.31	4.44	14.69	1.26	1 x 1 x 6	1 - 8 x 2 1/4
KA/KAF/KAZ157	19.69	4.500	6.10	4.95	18.11	1.26	1 x 1 x 6	1 - 8 x 2 1/4

Model	Metric Shafts							Dimensions are mm
	EH	U *	UF	UY	VG	VH	Key	M
KA/KAF/KAZ37	120	30	45	33.3	105	17	8 x 7 x 40	M10 x 25
KA/KAF/KAZ47	150	35	50	38.3	132	22	10 x 8 x 45	M12 x 30
	150	30	50	33.3	132	16	8 x 7 x 40	M10 x 25
KA/KAF/KAZ57	166	40	55	43.3	142	29	12 x 8 x 50	M16 x 40
KA/KAF/KAZ67	180	40	55	43.3	156	29	12 x 8 x 50	M16 x 40
KA/KAF/KAZ77	210	50	70	53.8	183	32	14 x 9 x 80	M16 x 45
KA/KAF/KAZ87	240	60	85	64.4	210	36	18 x 11 x 100	M20 x 50
KA/KAF/KAZ97	300	70	95	74.9	270	34	20 x 12 x 110	M20 x 50
KA/KAF/KAZ107	350	90	118	95.4	313	40	25 x 14 x 160	M24 x 60
	350	80	118	85.4	313	30	22 x 14 x 125	M20 x 50
KA/KAF/KAZ127	410	100	135	106.4	373	38	28 x 16 x 180	M24 x 60
KA/KAF/KAZ157	500	120	155	127.4	460	36	32 x 18 x 200	M24 x 60

[1)] **INX shaft options incur an additional charge.**

*** Note: See page 18 for tolerances.**

آتور صنعت ATOORSANAT SEW EURODRIVE

9.Torque Arm Arrangement

A–SIDE MOUNTING

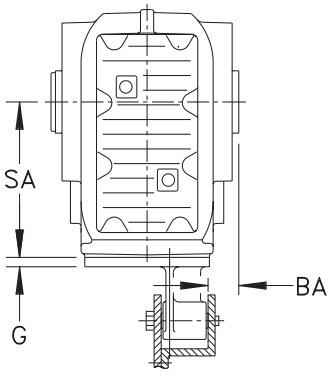

B–SIDE MOUNTING

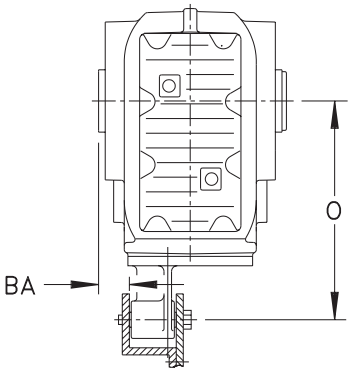

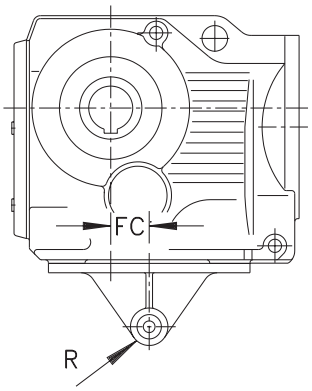

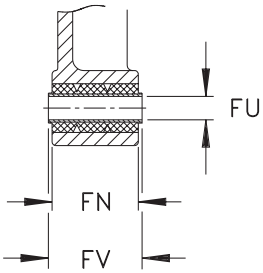

Dimensions are inch / mm

Model	BA	FC	G	O	R	SA	FN	FU *	FV[1]	Part Number	Retaining Bolts[2]
KA37T..	0.79 20	0.93 23.5	0.39 10	5.51 140	0.89 22.5	3.94 100	1.22 31	0.41 10.4	1.42 36	643 425 8	4 x M10 x 25-8.8
KA47T..	0.79 20	1.18 30	0.47 12	6.30 160	0.89 22.5	4.41 112	1.22 31	0.41 10.4	1.42 36	643 428 2	4 x M10 x 30-8.8
KA57T..	0.71 18	1.57 40	0.51 13	7.56 192	1.14 29	5.20 132	2.13 54	0.65 16.4	2.36 60	643 431 2	4 x M12 x 35-8.8
KA67T..	0.98 25	1.77 45	0.51 13	7.87 200	1.14 29	5.51 140	2.13 54	0.65 16.4	2.36 60	643 431 2	4 x M12 x 35-8.8
KA77T..	0.98 25	2.07 52.5	0.55 14	9.84 250	1.14 29	7.09 180	2.13 54	0.65 16.4	2.36 60	643 434 7	4 x M16 x 40-8.8
KA87T..	1.18 30	2.36 60	0.63 16	11.81 300	1.61 41	8.35 212	2.83 72	0.98 25	3.15 80	643 437 1	4 x M16 x 45-8.8
KA97T..	1.57 40	2.76 70	0.67 17	13.78 350	1.61 41	10.43 265	3.62 92	0.98 25	3.94 100	643 440 1	4 x M20 x 50-8.8
KA107T..	1.77 45	2.91 74	0.79 20	17.72 450	1.61 41	12.40 315	3.62 92	0.98 25	3.94 100	643 443 6	4 x M24 x 60-8.8
KA127T..	0.28 7	2.36 60	1.77 45	21.65 550	2.76 70	14.76 375	4.33 110	1.57 40	4.96 126	643 294 8	4 x M36 x 130-8.8 4 x ISO4032 - M36-8
KA157T..	0.08 2	1.97 50	1.77 45	27.56 700	2.76 70	17.72 450	4.33 110	1.57 40	4.96 126	643 295 6	4 x M36 x 130-8.8 4 x ISO4032 - M36-8

[1] Tolerance for FV is -0.012 in./-0.3mm
[2] ISO 4017

*** Note: See page 18 for tolerances.**

10. Output Shaft Tap Specifications

Inch Shaft

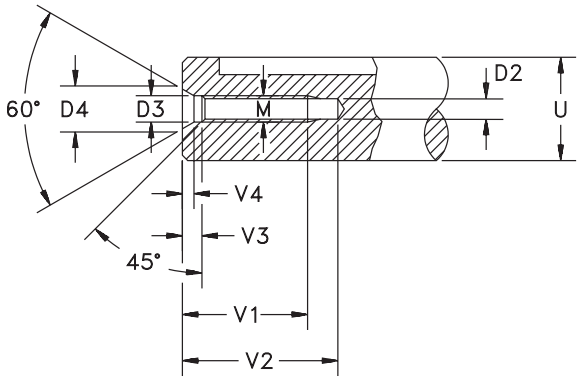

Metric Shaft

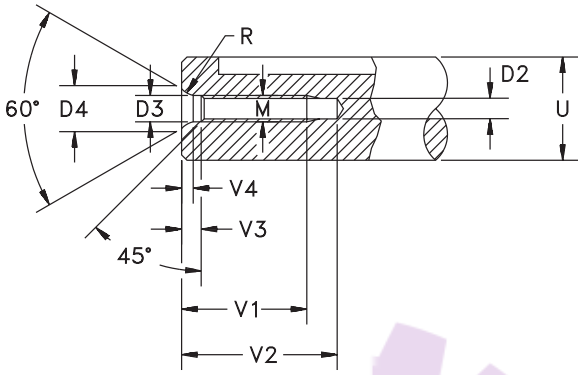

Inch Shaft — Dimensions are inch

Shaft Diameter - U from	Shaft Diameter - U through[1)]	M	D2	D3	D4	V1*	V2 min.	V3*	V4 approximate
0	13/16	1/4 - 20	0.2010	0.256	0.374	0.630	0.787	0.197	0.102
7/8	15/16	5/16 - 18	0.2570	0.327	0.472	0.866	1.102	0.236	0.126
1	1-1/8	3/8 - 16	0.3125	0.374	0.571	0.866	1.102	0.295	0.169
1-1/4	1-3/8	1/2 - 13	0.4219	0.531	0.768	1.122	1.417	0.374	0.205
1-1/2	1-7/8	5/8 - 11	0.5312	0.654	0.984	1.378	1.772	0.472	0.283
2	3-1/4	3/4 - 10	0.6562	0.795	1.181	1.614	2.047	0.591	0.335
3-3/8 and over		1 - 8	0.8750	1.000	1.457	2.126	2.677	0.709	0.394

Metric Shaft — Dimensions are mm

Shaft Diameter - U from	Shaft Diameter - U through[1)]	M	D2	D3	D4	R	V1*	V2 min.	V3**	V4 approximate
7	10	M3	2.5	3.2	5.3	4.0	9.0	12.0	2.6	1.8
10	13	M4	3.3	4.3	6.7	5.0	10.0	14.0	3.2	2.1
13	16	M5	4.2	5.3	8.1	6.3	12.5	17.0	4.0	2.4
16	21	M6	5.0	6.4	9.6	8.0	16.0	21.0	5.0	2.8
21	24	M8	6.8	8.4	12.2	10.0	19.0	25.0	6.0	3.3
24	30	M10	8.5	10.5	14.9	16.0	22.0	30.0	7.5	3.8
30	38	M12	10.2	13.0	18.1	20.0	28.0	37.0	9.5	4.4
38	50	M16	14.0	17.0	23.0	25.0	36.0	45.0	12.0	5.2
50	85	M20	17.5	21.0	28.4	31.5	42.0	53.0	15.0	6.4
85	130	M24	21.0	25.0	34.2	40.0	50.0	63.0	18.0	8.0
130 and over		M30	26.5	31.0	42.6	50.0	63.0	85.0	20.0	10.0

[1)] **up to and including this diameter**
***V1 inch tolerance +.079 / -0 , metric tolerance +2 / -0.**
****V3 +.039 *inch* tolerance only.**
*** Note: See page 18 for tolerances.**

Dimensions subject to change without notice.

آتور صنعت ATOORSANAT SEW EURODRIVE

11. Customer Solid Shaft & Assembly/Disassembly Tool

When using conventional tools to remove a shaft mounted gear unit, the dismantling forces are exerted via the reducer housing and bearings and may damage the machine's drive shaft or the gear unit. To simplify the removal from the machine's drive shaft, a tool can be made as shown. A round, keyed nut (2) is inserted into the free space between the end of the machine drive shaft and the snapring in the gear unit's hollowshaft. A removal bolt (1) is screwed into the nut and presses a disc (3) against the end face of the machine drive shaft, forcing the machine drive shaft out of the hollowshaft. Please note the securing bolt normally supplied with the gear unit's hollowshaft must be replaced with a bolt as shown and the customer solid shaft should be manufactured in accordance with the dimensions shown here.

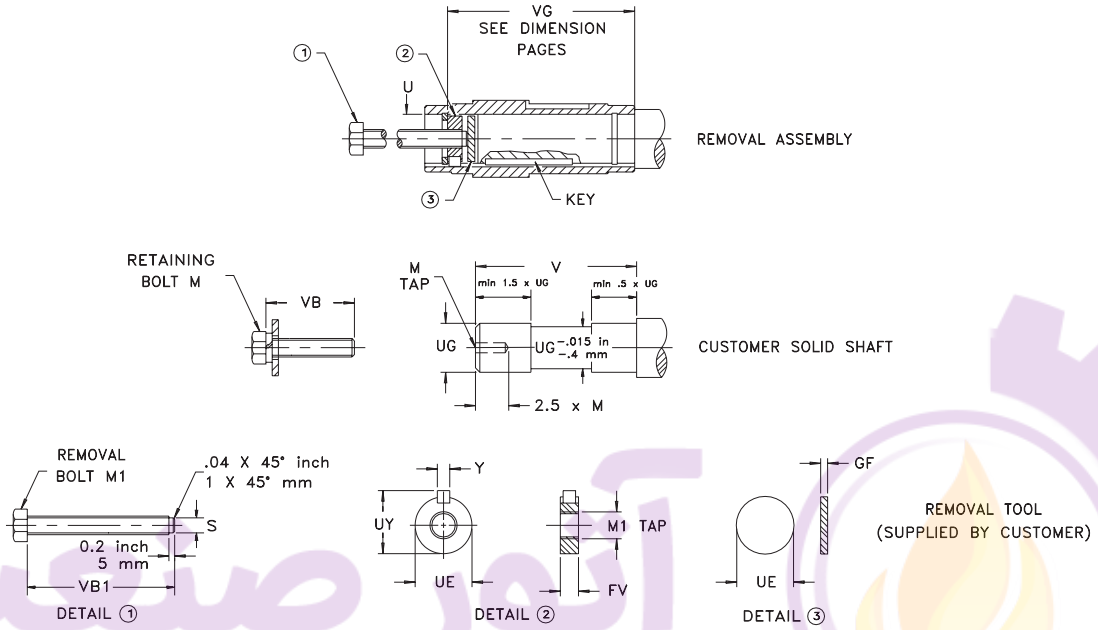

Tolerance for Shaft Diameter UG				
UG		*Load Class		
		I	II	III
Inch	1.1875 – 1.500	+0 –.0011	+.0004 –.0007	+.0007 –.0004
	2.000 – 2.938	+0 –.0009	+.0005 –.0005	+.0008 –.0001
	3.250 – 4.000	+0 –.0012	+.0005 –.0007	+.0010 –.0003
Metric (mm)	20 - 30	+0 -.013	+.009 -.004	+.015 +.002
	35 - 50	+0 -.016	+.011 -.005	+.018 +.002
	60 - 80	+0 -.019	+.012 -.007	+.021 +.002
	90 - 120	+0 -.022	+.013 -.009	+.025 +.003

*Load Class I = Uniform Load and $\frac{J_L}{J_m} \leq 0.2$

Load Class II = Moderate Shock Load and $\frac{J_L}{J_m} \leq 3.0$

Load Class III = Heavy Shock Load and $\frac{J_L}{J_m} \leq 10$

where: J_L = Load Inertia reflected to reducer input and J_m = Motor Inertia

Inch Bore Hollowshaft — Dimensions are inch

Model	FV	GF	M	M1	S	U *	UE**	UG*	UY Max.	V	VB	VB1	Y Max.
KA/KAF/KAZ37	.58	.20	7/16 – 14	5/8 – 18	.50	1.250	1.245	1.250	1.35	3.23	2.00	6.00	.250
KA/KAF/KAZ47	.59	.20	7/16 – 14	5/8 – 18	.50	1.250	1.245	1.250	1.35	4.29	2.00	6.00	.250
	.59	.20	1/2 – 13	5/8 – 18	.50	1.375	1.370	1.375	1.50	4.29	2.00	6.00	.3125
KA/KAF/KAZ57	.79	.20	5/8 – 11	1 – 14	.81	1.500	1.495	1.50	1.65	4.45	2.75	7.00	.375
KA/KAF/KAZ67	.79	.20	5/8 – 11	1 – 14	.81	1.4375	1.433	1.4375	1.59	5.00	2.75	7.00	.375
	.79	.20	5/8 – 11	1 – 14	.81	1.500	1.495	1.500	1.65	5.00	2.75	7.00	.375
KA/KAF/KAZ77	.79	.20	5/8 – 11	1 – 14	.81	1.9375	1.933	1.9375	2.14	6.06	2.75	7.00	.500
	.79	.20	5/8 – 11	1 – 14	.81	2.000	1.995	2.000	2.20	6.06	2.75	8.50	.500
KA/KAF/KAZ87	.94	.31	3/4 – 10	1 1/4 – 12	1.00	2.375	2.370	2.375	2.63	6.85	3.50	10.00	.625
	.94	.31	3/4 – 10	1 1/4 – 12	1.00	2.4375	2.433	2.438	2.60	6.85	3.50	10.00	.625
KA/KAF/KAZ97	.94	.31	3/4 – 10	1 1/4 – 12	1.00	2.750	2.745	2.750	3.01	9.21	3.50	12.50	.625
	.94	.31	3/4 – 10	1 1/4 – 12	1.00	2.9375	2.933	2.938	3.12	9.21	3.50	12.50	.750
KA/KAF/KAZ107	.94	.31	3/4 – 10	1 1/4 – 12	1.00	3.250	3.245	3.250	3.57	10.98	4.00	14.00	.750
	.94	.31	3/4 – 10	1 1/4 – 12	1.00	3.4375	3.433	3.438	3.68	10.98	4.00	14.00	.875
	.94	.31	3/4 – 10	1 1/4 – 12	1.00	3.625	3.620	3.625	3.87	10.98	4.00	14.00	.875
KA/KAF/KAZ127	1.15	.31	1 – 8	1 1/2 – 12	1.23	4.000	3.995	4.000	4.42	12.87	4.00	16.50	1.000
KA/KAF/KAZ157	1.15	.31	1 – 8	1 1/2 – 12	1.23	4.500	4.495	4.00	4.93	16.38	4.25	20.0	1.000

Metric Bore Hollowshaft — Dimensions are mm

Model	FV	GF	M	M1	S	U *	UE**	UG*	UY Max.	V	VB	VB1	Y Max.
KA/KAF/KAZ37	15	5	M10	M16 × 1	13	30	29.9	30	33	82	50	130	8
KA/KAF/KAZ47	15	5	M10	M16 × 1	13	30	29.9	30	33	109	55	160	8
	15	5	M12	M16 × 1	13	35	34.9	35	38	109	55	160	10
KA/KAF/KAZ57	20	5	M16	M24 × 1.5	20	40	39.9	40	43	113	70	190	12
KA/KAF/KAZ67	20	5	M16	M24 × 1.5	20	40	39.9	40	43	127	70	190	12
KA/KAF/KAZ77	20	5	M16	M24 × 1.5	20	50	49.9	50	53.5	154	70	220	14
KA/KAF/KAZ87	24	8	M20	M30 × 1.5	26	60	59.9	60	64	174	90	250	18
KA/KAF/KAZ97	24	8	M20	M30 × 1.5	26	70	69.9	70	74.5	234	90	320	20
KA/KAF/KAZ107	24	8	M20	M30 × 1.5	26	80	79.9	80	85	279	100	360	22
	24	8	M24	M30 × 1.5	26	90	89.9	90	95	279	100	360	25
KA/KAF/KAZ127	30	8	M24	M36 × 1.5	32	100	99.9	100	106	330	100	420	28
KA/KAF/KAZ157	30	8	M24	M36 × 1.5	32	120	119.9	120	127	416	110	500	32

*** Note: See page 18 for U dimension tolerances. See previous page for UG dimension tolerances.**
****inch tolerance is -.01, metric tolerance is -.02**

Dimensions subject to change without notice.

آتور صنعت ATOORSANAT SEW EURODRIVE

Notes

آتور صنعت
ATOORSANAT

1.S-Series Dimensions

VU

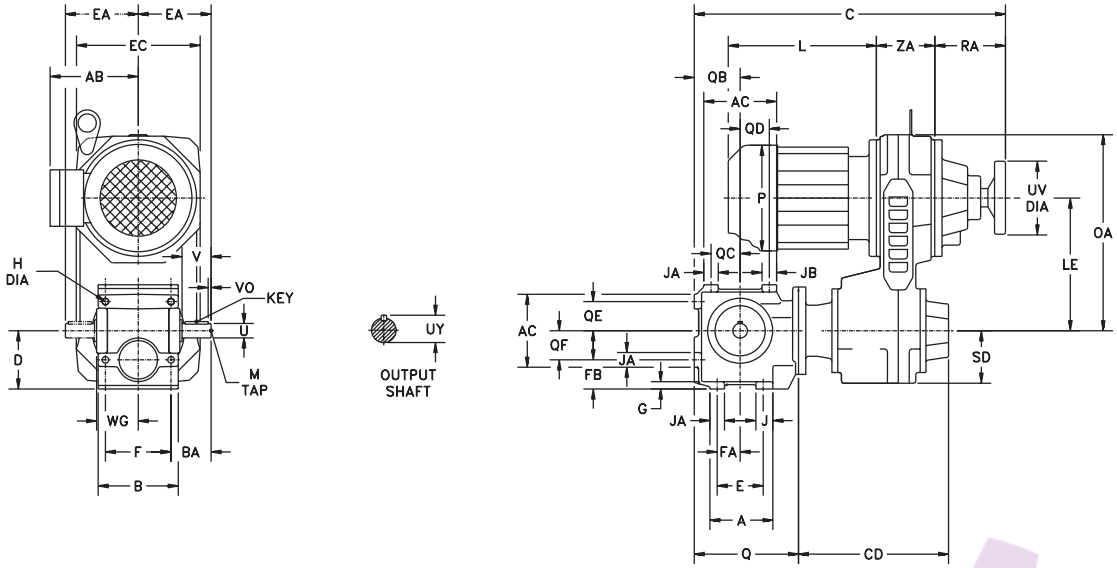

VZ

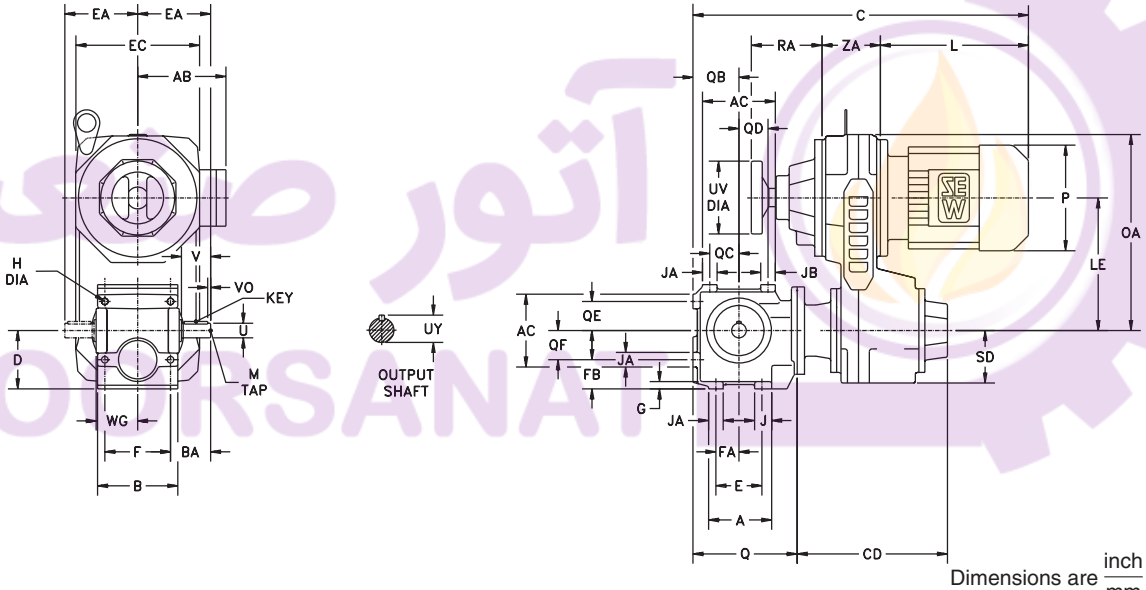

Dimensions are inch / mm

Gearcase																						
Model	A	AC	B	BA	D*	E	EA	F	FA	FB	G	H	J	JA	JB	Q	QB	QC	QD	QE	QF	WG
S37	3.54 90	3.94 100	4.33 110	2.17 55	3.15 80	2.48 63	3.94 100	3.54 90	1.38 35	1.57 40	0.39 10	0.35 9	1.06 27	0.79 20	0.94 24	5.63 143	2.48 63	1.57 40	1.57 40	1.57 40	1.57 40	2.24 57

Output Shaft						
Model	U*	UY	V	VO	Key	M
S37	0.750 20	0.83 22.5	1.57 40	0.25 4	3/16 × 3/16 × 1 1/16 6 x 6 x 32	1/4 – 20 × 0.63 M6 x 16

*** Note: See page 18 for tolerances.**

Dimensions subject to change without notice.

آتور صنعت ATOORSANAT SEW EURODRIVE

VARIGEAR®							
Model	**EC**	**LE**	**OA**	**RA**	**SD**	**UV**	**ZA**
VU/VZ01	6.93 176	7.17 182	10.59 269	3.86 98	2.83 72	3.15 80	3.15 80
VU/VZ11	7.20 183	9.13 232	12.68 322	4.61 117	3.46 88	3.94 100	3.86 98

VARIGEAR® VU				
Model		**VU01**		**VU11**
		DT71	**DT80**	**DT90**
S37	**C**	17.13 435	17.13 435	18.90 480
	CD	8.39 213	8.39 213	9.37 238

VARIGEAR® VZ				
Model		**VZ01**		**VZ11**
		DT71	**DT80**	**DT90**
S37	**C**	18.35 466	20.31 516	22.28 566
	CD	8.39 213	8.39 213	9.37 238

Motor			
	VU/VZ01		**VU/VZ11**
	DT71	**DT80**	**DT90**
AB	5.43 138	5.43 138	6.73 171
L	7.95 202	9.92 252	10.75 273
P	5.71 145	5.71 145	7.76 197

Dimension AB is to motor conduit box
Eye bolts are removable
Size VU6 is supplied with windless-type control
See page 64 for VARIGEAR® configuration options.
See page 271 for available output shaft options.

آتور صنعت
ATOORSANAT

VU

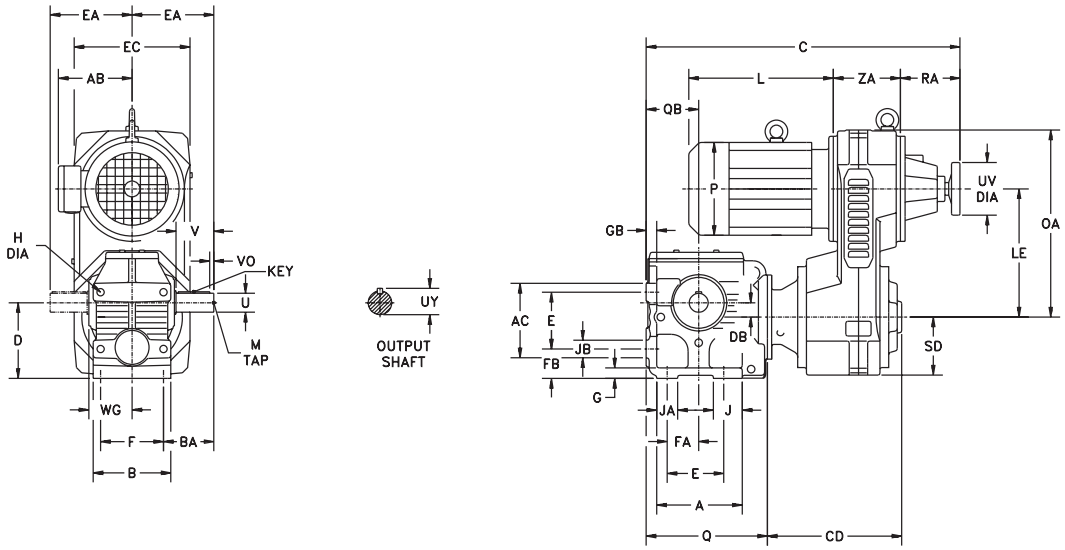

VZ

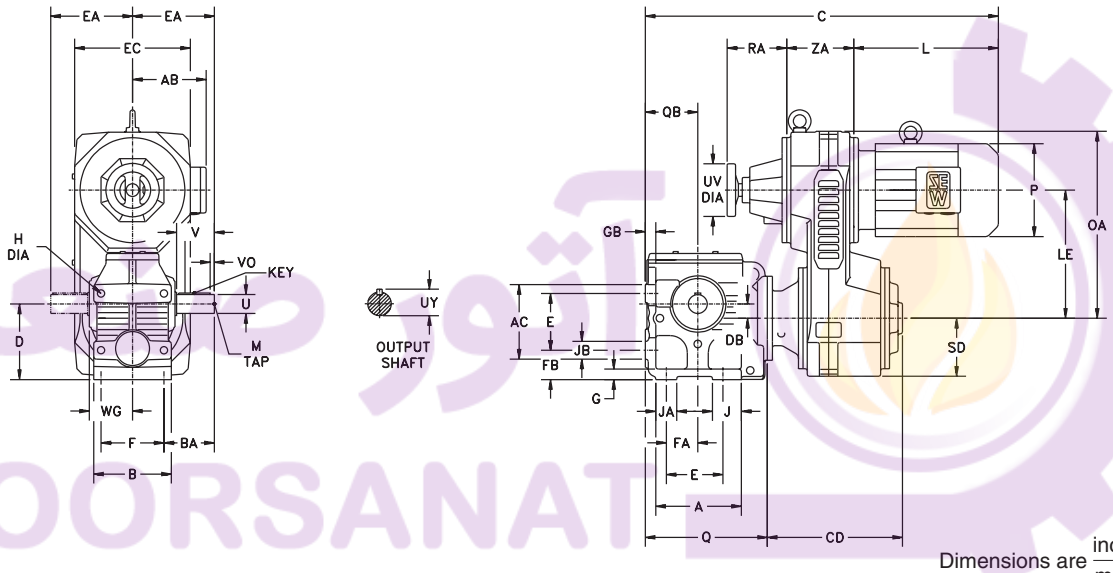

Dimensions are $\frac{\text{inch}}{\text{mm}}$

Gearcase																				
Model	**A**	**AC**	**B**	**BA**	**D***	**DB**	**E**	**EA**	**F**	**FA**	**FB**	**G**	**GB**	**H**	**J**	**JA**	**JB**	**Q**	**QB**	**WG**
S47	4.41 112	4.13 105	4.72 120	2.56 65	3.94 100	0.31 8	3.15 80	4.53 115	3.94 100	1.38 35	1.38 35	0.59 15	0.47 12	0.43 11	1.18 30	1.18 30	0.98 25	6.73 171	2.95 75	2.36 60
S57	5.12 130	5.12 130	5.35 136	3.11 79	4.41 112	0.79 20	3.94 100	5.28 134	4.33 110	1.77 45	1.38 35	0.59 15	0.47 12	0.43 11	1.18 30	1.18 30	1.18 30	7.36 187	3.15 80	2.80 71
S67	6.89 175	6.69 170	6.30 160	3.74 95	5.51 140	0.87 22	5.12 130	6.30 160	5.12 130	2.36 60	1.57 40	0.71 18	0.59 15	0.53 13.5	1.77 45	1.77 45	1.57 40	9.49 241	4.17 106	3.37 85.5

Output Shaft						
Model	**U***	**UY**	**V**	**VO**	**Key**	**M**
S47	1.000 25	1.11 28	1.97 50	0.32 5	$\frac{1}{4} \times \frac{1}{4} \times 1\frac{5}{16}$ 8 x 7 x 40	$\frac{3}{8}$ – 16 × 0.87 M10 x 22
S57	1.250 30	1.36 33	2.36 60	0.26 3.5	$\frac{1}{4} \times \frac{1}{4} \times 1\frac{11}{16}$ 8 x 7 x 50	$\frac{1}{2}$ – 13 × 1.12 M10 x 22
S67	1.375 35	1.51 38	2.76 70	0.43 7	$\frac{5}{16} \times \frac{5}{16} \times 1\frac{13}{16}$ 10 x 8 x 56	$\frac{1}{2}$ – 13 × 1.12 M12 x 28

*** Note: See page 18 for tolerances.**

Dimensions subject to change without notice.

آتور صنعت ATOORSANAT
SEW EURODRIVE

VARIGEAR®							
Model	**EC**	**LE**	**OA**	**RA**	**SD**	**UV**	**ZA**
VU/VZ01	6.93 176	7.17 182	10.59 269	3.86 98	2.83 72	3.15 80	3.15 80
VU/VZ11	7.20 183	9.13 232	12.68 322	4.61 117	3.46 88	3.94 100	3.86 98
VU/VZ21	8.94 227	9.65 245	13.98 355	5.12 130	4.33 110	3.94 100	4.72 120
VU/VZ31	11.14 283	12.01 305	17.52 445	5.91 150	5.43 138	4.92 125	5.98 152

VARIGEAR® VU								
Model		**VU01**		**VU11**	**VU21**	**VU31**		
		DT71	**DT80**	**DT90**	**DT100**	**DT100**	**DV112M**	**DV132S**
S47	**C**	18.23 463	18.23 463	20.00 508	— —	— —	— —	— —
	CD	8.39 213	8.39 213	9.37 238	— —	— —	— —	— —
S57	**C**	18.86 479	18.86 479	20.63 524	— —	— —	— —	— —
	CD	8.39 213	8.39 213	9.37 238	— —	— —	— —	— —
S67	**C**	20.71 526	20.71 526	22.48 571	25.12 638	28.15 715	28.15 715	28.15 715
	CD	8.11 206	8.11 206	9.13 232	10.98 279	13.03 331	13.03 331	13.03 331

VARIGEAR® VZ								
Model		**VZ01**		**VZ11**	**VZ21**	**VZ31**		
		DT71	**DT80**	**DT90**	**DT100**	**DT100**	**DV112M**	**DV132S**
S47	**C**	19.45 494	21.42 544	23.39 594	— —	— —	— —	— —
	CD	8.39 213	8.39 213	9.37 238	— —	— —	— —	— —
S57	**C**	20.08 510	22.05 560	24.02 610	— —	— —	— —	— —
	CD	8.39 213	8.39 213	9.37 238	— —	— —	— —	— —
S67	**C**	21.93 557	23.90 607	25.87 657	28.70 729	30.04 763	31.54 801	33.31 846
	CD	8.11 206	8.11 206	9.13 232	10.98 279	13.03 331	13.03 331	13.03 331

Motor							
	VU/VZ01		**VU/VZ11**	**VU/VZ21**	**VU/VZ31**		
	DT71	**DT80**	**DT90**	**DT100**	**DT100**	**DV112M**	**DV132S**
AB	5.43 138	5.43 138	6.73 171	6.89 175	6.89 175	7.40 188	7.40 188
L	7.95 202	9.92 252	10.75 273	12.24 311	12.24 311	13.74 349	15.51 394
P	5.71 145	5.71 145	7.76 197	7.76 197	7.76 197	8.70 221	8.70 221

Dimension AB is to motor conduit box
Eye bolts are removable
Size VU6 is supplied with windless-type control
See page 64 for VARIGEAR® configuration options.
See page 271 for available output shaft options.

Dimensions subject to change without notice.

VU

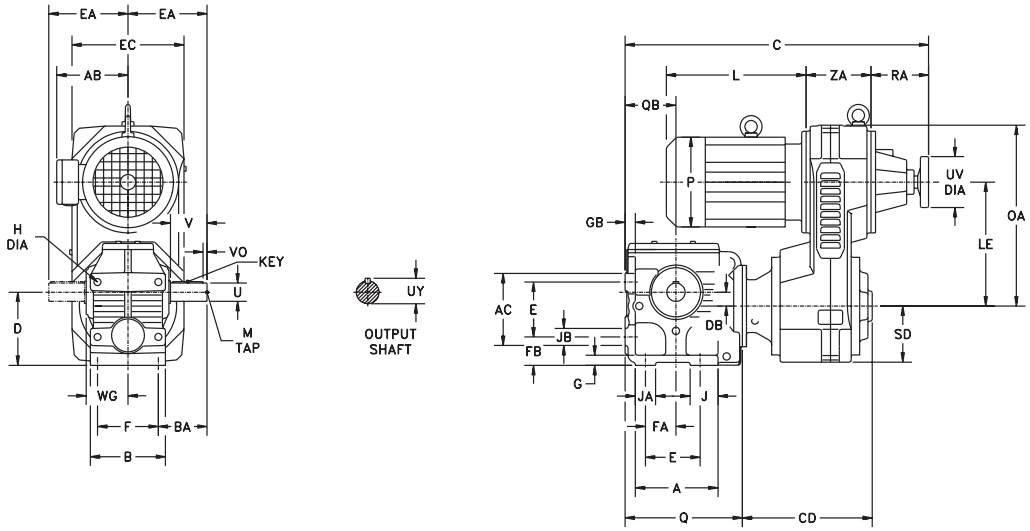

VZ

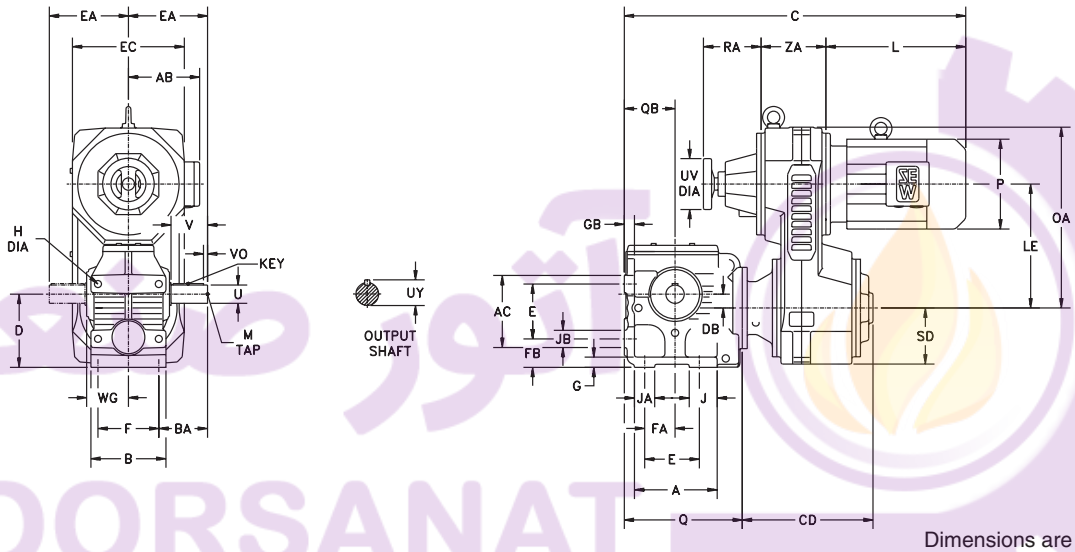

Dimensions are inch / mm

Gearcase																				
Model	**A**	**AC**	**B**	**BA**	**D***	**DB**	**E**	**EA**	**F**	**FA**	**FB**	**G**	**GB**	**H**	**J**	**JA**	**JB**	**Q**	**QB**	**WG**
S77	8.03	6.97	7.28	4.72	7.09	1.34	5.31	7.68	5.91	2.95	2.76	0.98	0.98	0.69	2.72	1.97	1.65	11.30	4.92	3.98
	204	177	185	120	180	34	135	195	150	75	70	25	25	17.5	69	50	42	287	125	101
S87	9.72	9.06	9.84	6.10	8.86	1.48	7.09	10.04	7.87	3.62	3.23	1.18	1.18	0.87	2.64	2.36	1.97	13.39	5.91	5.12
	247	230	250	155	225	37.5	180	255	200	92	82	30	30	22	67	60	50	340	150	130
S97	12.60	11.61	11.81	6.69	11.02	2.05	9.25	11.61	9.84	4.53	3.54	1.38	1.38	1.02	3.35	3.15	2.36	16.54	7.09	5.91
	320	295	300	170	280	52	235	295	250	115	90	35	35	26	85	80	60	420	180	150

Output Shaft						
Model	**U***	**UY**	**V**	**VO**	**Key**	**M**
S77	1.750	1.92	3.54	0.38	$\frac{3}{8} \times \frac{3}{8} \times 2\frac{3}{4}$	$\frac{5}{8} - 11 \times 1.38$
	45	48.5	90	5	14 x 9 x 80	M16 x 36
S87	2.375	2.65	4.72	0.51	$\frac{5}{8} \times \frac{5}{8} \times 3\frac{5}{8}$	$\frac{3}{4} - 10 \times 1.61$
	60	64	120	5	18 x 11 x 110	M20 x 42
S97	2.875	3.20	5.51	0.67	$\frac{3}{4} \times \frac{3}{4} \times 4\frac{1}{8}$	$\frac{3}{4} - 10 \times 1.61$
	70	74.5	140	7.5	20 x 12 x 125	M20 x 42

*** Note: See page 18 for tolerances.**

Dimensions subject to change without notice.

آتور صنعت ATOORSANAT
SEW EURODRIVE

VARIGEAR®							
Model	**EC**	**LE**	**OA**	**RA**	**SD**	**UV**	**ZA**
VU/VZ11	7.20 183	9.13 232	12.68 322	4.61 117	3.46 88	3.94 100	3.86 98
VU/VZ21	8.94 227	9.65 245	13.98 355	5.12 130	4.33 110	3.94 100	4.72 120
VU/VZ31	11.14 283	12.01 305	17.52 445	5.91 150	5.43 138	4.92 125	5.98 152
VU/VZ41	13.70 348	14.96 380	21.77 553	7.44 189	6.69 170	7.87 200	7.09 180
VU51	15.67 398	18.11 460	25.91 658	8.66 220	7.68 195	7.87 200	7.87 200

VARIGEAR® VU											
Model		**VU11**	**VU21**	**VU31**			**VU41**			**VU51**	
		DT90	**DT100**	**DT100**	**DV112M**	**DV132S**	**DV132M**	**DV132ML**	**DV160M**	**DV160L**	**DV180**
S77	**C**	24.06 611	26.61 676	29.61 752	29.61 752	29.61 752	34.06 865	34.06 865	34.06 865	— —	— —
	CD	8.90 226	10.67 271	12.68 322	12.68 322	12.68 322	15.63 397	15.63 397	15.63 397	— —	— —
S87	**C**	— —	28.54 725	31.50 800	31.50 800	31.50 800	35.94 913	35.94 913	35.94 913	39.25 997	39.25 997
	CD	— —	10.51 267	12.48 317	12.48 317	12.48 317	15.43 392	15.43 392	15.43 392	17.68 449	17.68 449
S97	**C**	— —	— —	34.45 875	34.45 875	34.45 875	38.90 988	38.90 988	38.90 988	42.20 1072	42.20 1072
	CD	— —	— —	12.28 312	12.28 312	12.28 312	15.24 387	15.24 387	15.24 387	17.48 444	17.48 444

VARIGEAR® VZ									
Model		**VZ11**	**VZ21**	**VZ31**			**VZ41**		
		DT90	**DT100**	**DT100**	**DV112M**	**DV132S**	**DV132M**	**DV132ML**	**DV160M**
S77	**C**	27.44 697	30.20 767	31.50 800	32.99 838	34.76 883	36.54 928	38.90 988	38.90 988
	CD	8.90 226	10.67 271	12.68 322	12.68 322	12.68 322	15.63 397	15.63 397	15.63 397
S87	**C**	— —	32.13 816	33.39 848	34.88 886	36.65 931	38.43 976	40.79 1036	40.79 1036
	CD	— —	10.51 267	12.48 317	12.48 317	12.48 317	15.43 392	15.43 392	15.43 392
S97	**C**	— —	— —	36.34 923	37.83 961	39.61 1006	41.38 1051	43.74 1111	43.74 1111
	CD	— —	— —	12.28 312	12.28 312	12.28 312	15.24 387	15.24 387	15.24 387

Motor										
	VU/VZ11	**VU/VZ21**	**VU/VZ31**			**VU/VZ41**			**VU51**	
	DT90	**DT100**	**DT100**	**DV112M**	**DV132S**	**DV132M**	**DV132ML**	**DV160M**	**DV160L**	**DV180**
AB	6.73 171	6.89 175	6.89 175	7.40 188	7.40 188	9.13 232	9.13 232	9.13 232	10.04 255	10.55 268
L	10.75 273	12.24 311	12.24 311	13.74 349	15.51 394	15.83 402	18.19 462	18.19 462	19.80 503	22.64 575
P	7.76 197	7.76 197	7.76 197	8.70 221	8.70 221	10.83 275	10.83 275	10.83 275	13.03 331	13.03 331

Dimension AB is to motor conduit box
Eye bolts are removable
Size VU6 is supplied with windless-type control
See page 64 for VARIGEAR® configuration options.
See page 271 for available output shaft options.

VU

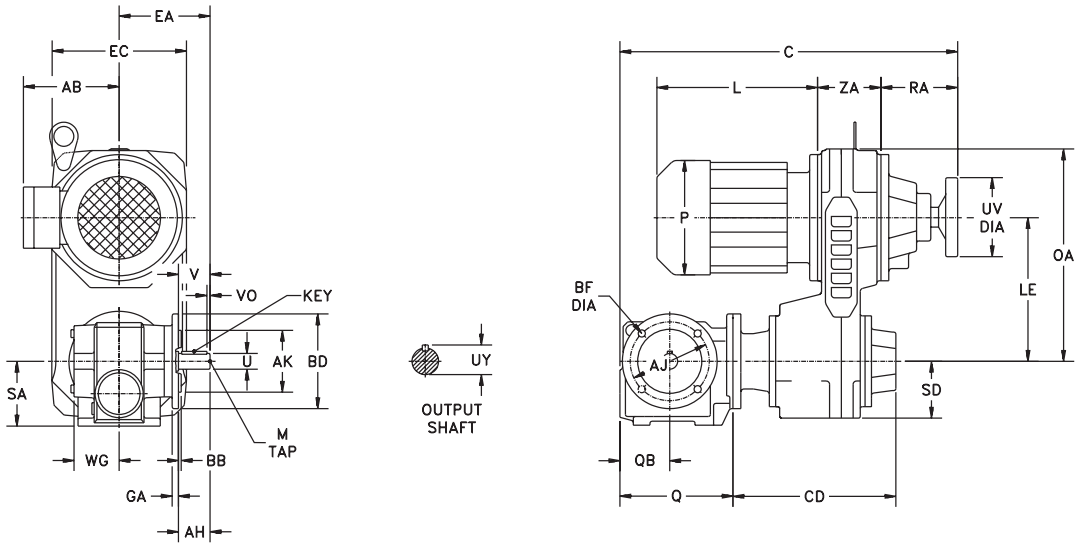

VZ

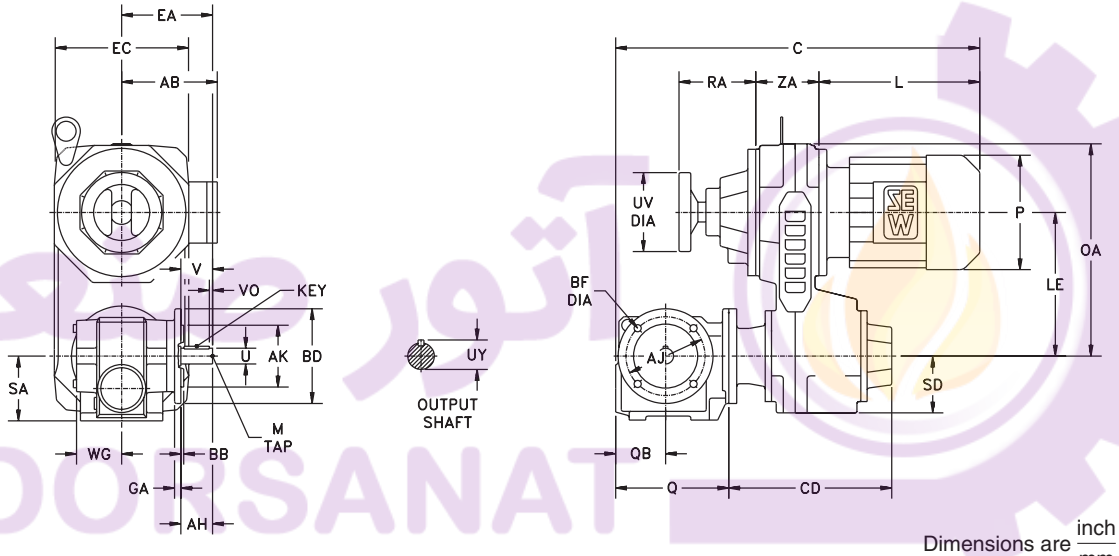

Dimensions are inch / mm

Gearcase					
Model	**EA**	**Q**	**QB**	**SA**	**WG**
SF37	4.53 115	5.63 143	2.48 63	3.23 82	2.24 57

Output Shaft						
Model	**U***	**UY**	**V**	**VO**	**Key**	**M**
SF37	0.750 20	0.83 22.5	1.57 40	0.25 4	$\frac{3}{16} \times \frac{3}{16} \times 1\frac{1}{16}$ 6 x 6 x 32	$\frac{1}{4}$ – 20 × 0.63 M6 x 16

Flange								Specify BD dimension when ordering
Model		**AH**	**AJ**	**AK***	**BB**	**BD**	**BF**	**GA**
SF37	**Option 1**	1.57 40	3.94 100	3.150 80	0.12 3	4.72 120	0.26 6.6	0.31 8
	Option 2	1.57 40	5.12 130	4.331 110	0.14 3.5	6.30 160	0.35 9	0.39 10

*** Note: See page 18 for tolerances.**

Dimensions subject to change without notice.

آتور صنعت ATOORSANAT SEW EURODRIVE

VARIGEAR®							
Model	**EC**	**LE**	**OA**	**RA**	**SD**	**UV**	**ZA**
VU/VZ01	6.93 176	7.17 182	10.59 269	3.86 98	2.83 72	3.15 80	3.15 80
VU/VZ11	7.20 183	9.13 232	12.68 322	4.61 117	3.46 88	3.94 100	3.86 98

VARIGEAR® VU				
Model		**VU01**		**VU11**
		DT71	**DT80**	**DT90**
SF37	**C**	17.13 435	17.13 435	18.90 480
	CD	8.39 213	8.39 213	9.37 238

VARIGEAR® VZ				
Model		**VZ01**		**VZ11**
		DT71	**DT80**	**DT90**
SF37	**C**	18.35 466	20.31 516	22.28 566
	CD	8.39 213	8.39 213	9.37 238

Motor			
	VU/VZ01		**VU/VZ11**
	DT71	**DT80**	**DT90**
AB	5.43 138	5.43 138	6.73 171
L	7.95 202	9.92 252	10.75 273
P	5.71 145	5.71 145	7.76 197

Dimension AB is to motor conduit box
Eye bolts are removable
Size VU6 is supplied with windless-type control
See page 64 for VARIGEAR® configuration options.
See page 271 for available output shaft options.

آتور صنعت
ATOORSANAT

VU

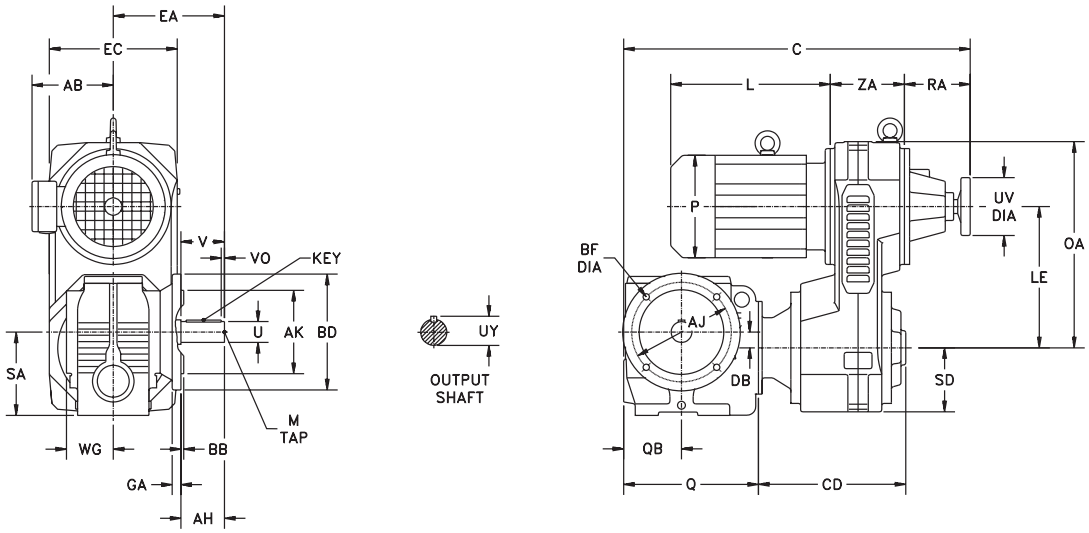

VZ

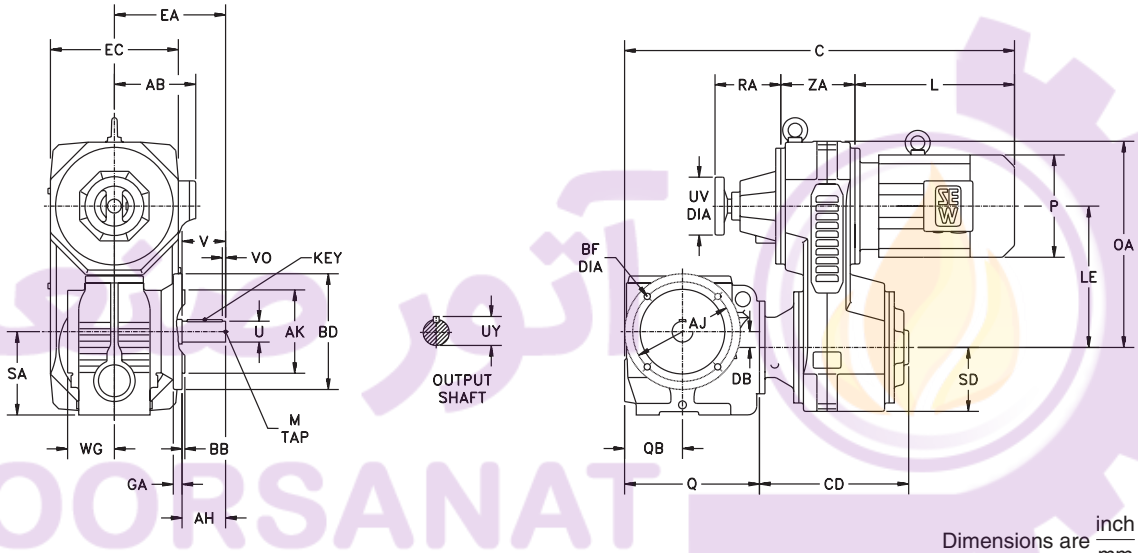

Dimensions are inch / mm

Model	Gearcase						Output Shaft					
	DB	EA	Q	QB	SA	WG	U*	UY	V	VO	Key	M
SF47	0.31 8	5.26 133.5	6.73 171	2.95 75	3.94 100	2.26 57.5	1.000 25	1.11 28	1.97 50	0.32 5	1/4 × 1/4 × 1 5/16 8 x 7 x 40	3/8 – 16 × 0.87 M10 x 22
SF57	0.79 20	6.30 160	7.36 187	3.15 80	4.41 112	2.83 72	1.250 30	1.36 33	2.36 60	0.26 3.5	1/4 × 1/4 × 1 11/16 8 x 7 x 50	1/2 – 13 × 1.12 M10 x 22
SF67	0.87 22	7.48 190	9.49 241	4.17 106	5.51 140	3.17 80.5	1.375 35	1.51 38	2.76 70	0.43 7	5/16 × 5/16 × 1 13/16 10 x 8 x 56	1/2 – 13 × 1.12 M12 x 28

Flange							
Model	AH	AJ	AK*	BB	BD	BF	GA
SF47	1.95 49.5	5.12 130	4.331 110	0.14 3.5	6.30 160	0.35 9	0.39 10
SF57	2.36 60	6.50 165	5.118 130	0.14 3.5	7.87 200	0.43 11	0.47 12
SF67	2.76 70	6.50 165	5.118 130	0.14 3.5	7.87 200	0.43 11	0.47 12

*** Note: See page 18 for tolerances.**

Dimensions subject to change without notice.

آتور صنعت ATOORSANAT
SEW EURODRIVE

VARIGEAR®							
Model	**EC**	**LE**	**OA**	**RA**	**SD**	**UV**	**ZA**
VU/VZ01	6.93 176	7.17 182	10.59 269	3.86 98	2.83 72	3.15 80	3.15 80
VU/VZ11	7.20 183	9.13 232	12.68 322	4.61 117	3.46 88	3.94 100	3.86 98
VU/VZ21	8.94 227	9.65 245	13.98 355	5.12 130	4.33 110	3.94 100	4.72 120
VU/VZ31	11.14 283	12.01 305	17.52 445	5.91 150	5.43 138	4.92 125	5.98 152

VARIGEAR® VU								
Model		**VU01**		**VU11**	**VU21**	**VU31**		
		DT71	**DT80**	**DT90**	**DT100**	**DT100**	**DV112M**	**DV132S**
SF47	**C**	18.23 463	18.23 463	20.00 508	— —	— —	— —	— —
	CD	8.39 213	8.39 213	9.37 238	— —	— —	— —	— —
SF57	**C**	18.86 479	18.86 479	20.63 524	— —	— —	— —	— —
	CD	8.39 213	8.39 213	9.37 238	— —	— —	— —	— —
SF67	**C**	20.71 526	20.71 526	22.48 571	25.12 638	28.15 715	28.15 715	28.15 715
	CD	8.11 206	8.11 206	9.13 232	10.98 279	13.03 331	13.03 331	13.03 331

VARIGEAR® VZ								
Model		**VZ01**		**VZ11**	**VZ21**	**VZ31**		
		DT71	**DT80**	**DT90**	**DT100**	**DT100**	**DV112M**	**DV132S**
SF47	**C**	19.45 494	21.42 544	23.39 594	— —	— —	— —	— —
	CD	8.39 213	8.39 213	9.37 238	— —	— —	— —	— —
SF57	**C**	20.08 510	22.05 560	24.02 610	— —	— —	— —	— —
	CD	8.39 213	8.39 213	9.37 238	— —	— —	— —	— —
SF67	**C**	21.93 557	23.90 607	25.87 657	28.70 729	30.04 763	31.54 801	33.31 846
	CD	8.11 206	8.11 206	9.13 232	10.98 279	13.03 331	13.03 331	13.03 331

Motor							
	VU/VZ01		**VU/VZ11**	**VU/VZ21**	**VU/VZ31**		
	DT71	**DT80**	**DT90**	**DT100**	**DT100**	**DV112M**	**DV132S**
AB	5.43 138	5.43 138	6.73 171	6.89 175	6.89 175	7.40 188	7.40 188
L	7.95 202	9.92 252	10.75 273	12.24 311	12.24 311	13.74 349	15.51 394
P	5.71 145	5.71 145	7.76 197	7.76 197	7.76 197	8.70 221	8.70 221

Dimension AB is to motor conduit box
Eye bolts are removable
Size VU6 is supplied with windless-type control
See page 64 for VARIGEAR® configuration options.
See page 271 for available output shaft options.

Dimensions subject to change without notice.

VU

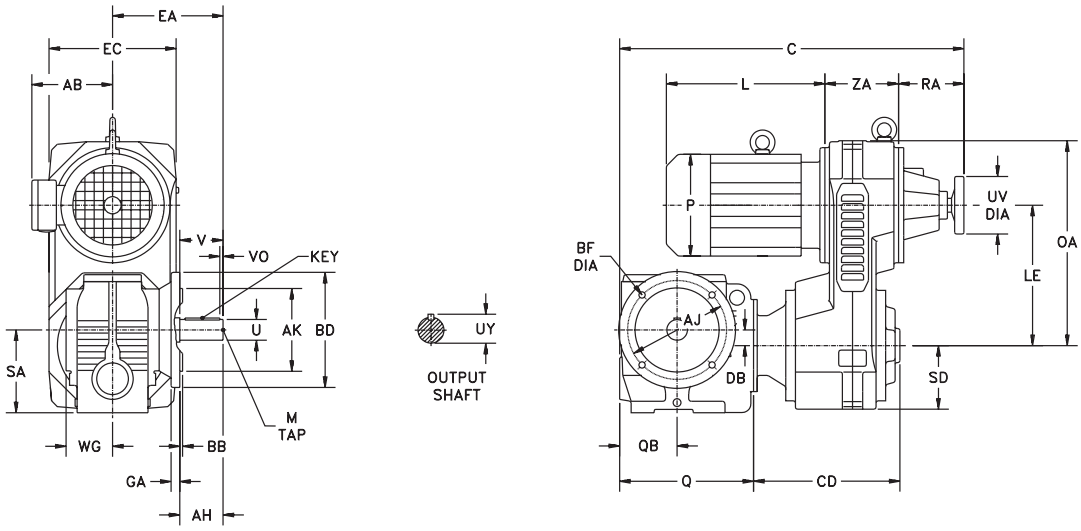

VZ

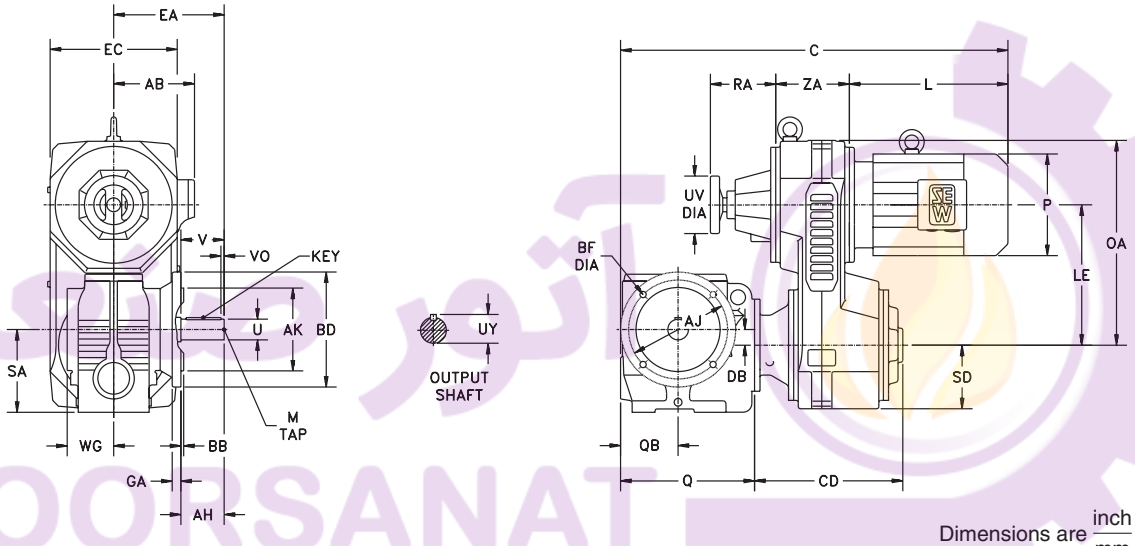

Dimensions are $\frac{\text{inch}}{\text{mm}}$

Model	Gearcase						Output Shaft					
	DB	EA	Q	QB	SA	WG	U*	UY	V	VO	Key	M
SF77	1.34 34	9.13 232	11.30 287	4.92 125	7.09 180	4.76 121	1.750 45	1.92 48.5	3.54 90	0.38 5	$\frac{3}{8} \times \frac{3}{8} \times 2\frac{3}{4}$ 14 x 9 x 80	$\frac{5}{8} - 11 \times 1.38$ M16 x 36
SF87	1.48 37.5	11.42 290	13.39 340	5.91 150	8.86 225	5.71 145	2.375 60	2.65 64	4.72 120	0.51 5	$\frac{5}{8} \times \frac{5}{8} \times 3\frac{5}{8}$ 18 x 11 x 110	$\frac{3}{4} - 10 \times 1.61$ M20 x 42
SF97	2.05 52	13.39 340	16.54 420	7.09 180	11.02 280	6.50 165	2.875 70	3.20 74.5	5.51 140	0.67 7.5	$\frac{3}{4} \times \frac{3}{4} \times 4\frac{1}{8}$ 20 x 12 x 125	$\frac{3}{4} - 10 \times 1.61$ M20 x 42

Flange							
Model	AH	AJ	AK*	BB	BD	BF	GA
SF77	3.54 90	8.46 215	7.087 180	0.16 4	9.84 250	0.53 13.5	0.59 15
SF87	4.72 120	11.81 300	9.843 250	0.20 5	13.78 350	0.69 17.5	0.71 18
SF97	5.51 140	15.75 400	13.780 350	0.20 5	17.72 450	0.69 17.5	0.87 22

*** Note: See page 18 for tolerances.**

Dimensions subject to change without notice.

آتور صنعت ATOORSANAT
SEW EURODRIVE

VARIGEAR®							
Model	**EC**	**LE**	**OA**	**RA**	**SD**	**UV**	**ZA**
VU/VZ11	7.20 183	9.13 232	12.68 322	4.61 117	3.46 88	3.94 100	3.86 98
VU/VZ21	8.94 227	9.65 245	13.98 355	5.12 130	4.33 110	3.94 100	4.72 120
VU/VZ31	11.14 283	12.01 305	17.52 445	5.91 150	5.43 138	4.92 125	5.98 152
VU/VZ41	13.70 348	14.96 380	21.77 553	7.44 189	6.69 170	7.87 200	7.09 180
VU51	15.67 398	18.11 460	25.91 658	8.66 220	7.68 195	7.87 200	7.87 200

VARIGEAR® VU											
Model		**VU11**	**VU21**	**VU31**			**VU41**			**VU51**	
		DT90	**DT100**	**DT100**	**DV112M**	**DV132S**	**DV132M**	**DV132ML**	**DV160M**	**DV160L**	**DV180**
SF77	**C**	24.06 611	26.61 676	29.61 752	29.61 752	29.61 752	34.06 865	34.06 865	34.06 865	— —	— —
	CD	8.90 226	10.67 271	12.68 322	12.68 322	12.68 322	15.63 397	15.63 397	15.63 397	— —	— —
SF87	**C**	— —	28.54 725	31.50 800	31.50 800	31.50 800	35.94 913	35.94 913	35.94 913	39.25 997	39.25 997
	CD	— —	10.51 267	12.48 317	12.48 317	12.48 317	15.43 392	15.43 392	15.43 392	17.68 449	17.68 449
SF97	**C**	— —	— —	34.45 875	34.45 875	34.45 875	38.90 988	38.90 988	38.90 988	42.20 1072	42.20 1072
	CD	— —	— —	12.28 312	12.28 312	12.28 312	15.24 387	15.24 387	15.24 387	17.48 444	17.48 444

VARIGEAR® VZ									
Model		**VZ11**	**VZ21**	**VZ31**			**VZ41**		
		DT90	**DT100**	**DT100**	**DV112M**	**DV132S**	**DV132M**	**DV132ML**	**DV160M**
SF77	**C**	27.44 697	30.20 767	31.50 800	32.99 838	34.76 883	36.54 928	38.90 988	38.90 988
	CD	8.90 226	10.67 271	12.68 322	12.68 322	12.68 322	15.63 397	15.63 397	15.63 397
SF87	**C**	— —	32.13 816	33.39 848	34.88 886	36.65 931	38.43 976	40.79 1036	40.79 1036
	CD	— —	10.51 267	12.48 317	12.48 317	12.48 317	15.43 392	15.43 392	15.43 392
SF97	**C**	— —	— —	36.34 923	37.83 961	39.61 1006	41.38 1051	43.74 1111	43.74 1111
	CD	— —	— —	12.28 312	12.28 312	12.28 312	15.24 387	15.24 387	15.24 387

Motor										
	VU/VZ11	**VU/VZ21**	**VU/VZ31**			**VU/VZ41**			**VU51**	
	DT90	**DT100**	**DT100**	**DV112M**	**DV132S**	**DV132M**	**DV132ML**	**DV160M**	**DV160L**	**DV180**
AB	6.73 171	6.89 175	6.89 175	7.40 188	7.40 188	9.13 232	9.13 232	9.13 232	10.04 255	10.55 268
L	10.75 273	12.24 311	12.24 311	13.74 349	15.51 394	15.83 402	18.19 462	18.19 462	19.80 503	22.64 575
P	7.76 197	7.76 197	7.76 197	8.70 221	8.70 221	10.83 275	10.83 275	10.83 275	13.03 331	13.03 331

Dimension AB is to motor conduit box
Eye bolts are removable
Size VU6 is supplied with windless-type control
See page 64 for VARIGEAR® configuration options.
See page 271 for available output shaft options.

Dimensions subject to change without notice.

VU

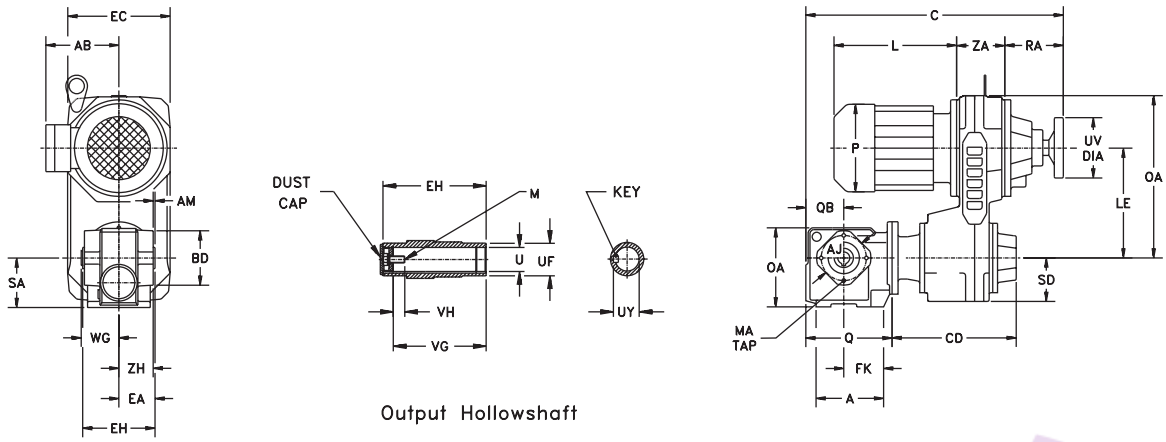

VZ

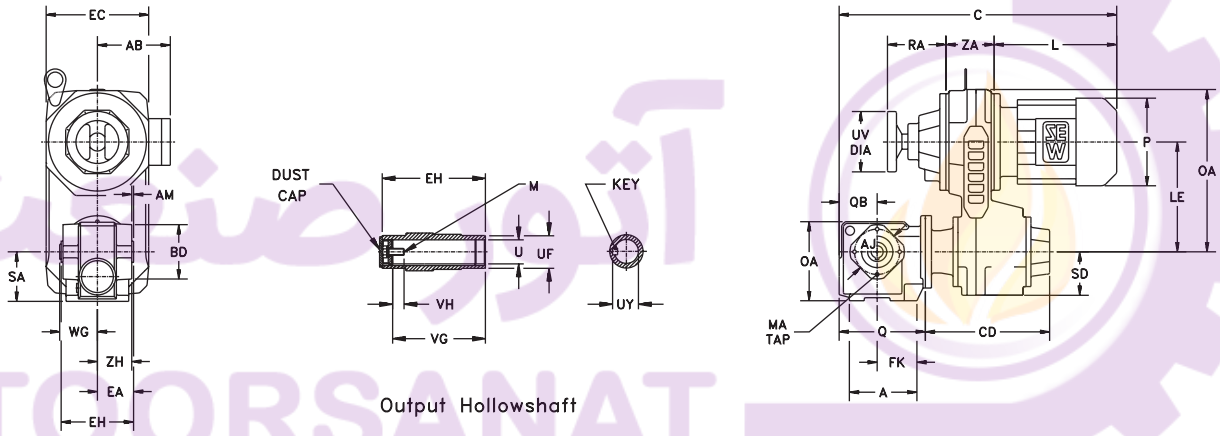

آتور صنعت
ATOORSANAT

Dimensions are inch / mm

Gearcase												
Model	**A**	**AJ**	**AM**	**BD**	**EA**	**FK**	**MA**	**Q**	**QB**	**SA**	**WG**	**ZH**
SA37	4.41 112	2.95 75	0.12 3	3.54 90	2.36 60	2.60 66	M6 x .31 M6 x 8	5.63 143	2.48 63	3.23 82	2.46 62.5	2.24 57

Output Shaft								
Model	**EH**	**UF**	**U***	**UY**	**VG**	**VH**	**Key**	**M**
SA37	4.72 120	1.38 35	0.750 20	0.84 22.8	4.09 104	0.37 8	3/16 × 3/16 × 1 1/4 6 x 6 x 32	1/4 – 20 × 5/8 M6 x 16

*** Note: See page 18 for tolerances.**

Dimensions subject to change without notice.

آتور صنعت ATOORSANAT
SEW EURODRIVE

VARIGEAR®							
Model	**EC**	**LE**	**OA**	**RA**	**SD**	**UV**	**ZA**
VU/VZ01	6.93 176	7.17 182	10.59 269	3.86 98	2.83 72	3.15 80	3.15 80
VU/VZ11	7.20 183	9.13 232	12.68 322	4.61 117	3.46 88	3.94 100	3.86 98

VARIGEAR® VU				
Model		**VU01**		**VU11**
		DT71	**DT80**	**DT90**
SA37	**C**	17.13 435	17.13 435	18.90 480
	CD	8.39 213	8.39 213	9.37 238

VARIGEAR® VZ				
Model		**VZ01**		**VZ11**
		DT71	**DT80**	**DT90**
SA37	**C**	18.35 466	20.31 516	22.28 566
	CD	8.39 213	8.39 213	9.37 238

Motor			
	VU/VZ01		**VU/VZ11**
	DT71	**DT80**	**DT90**
AB	5.43 138	5.43 138	6.73 171
L	7.95 202	9.92 252	10.75 273
P	5.71 145	5.71 145	7.76 197

Dimension AB is to motor conduit box
Eye bolts are removable
Size VU6 is supplied with windless-type control
See page 64 for VARIGEAR® configuration options.
See page 271 for available output shaft options.

آتور صنعت
ATOORSANAT

VU

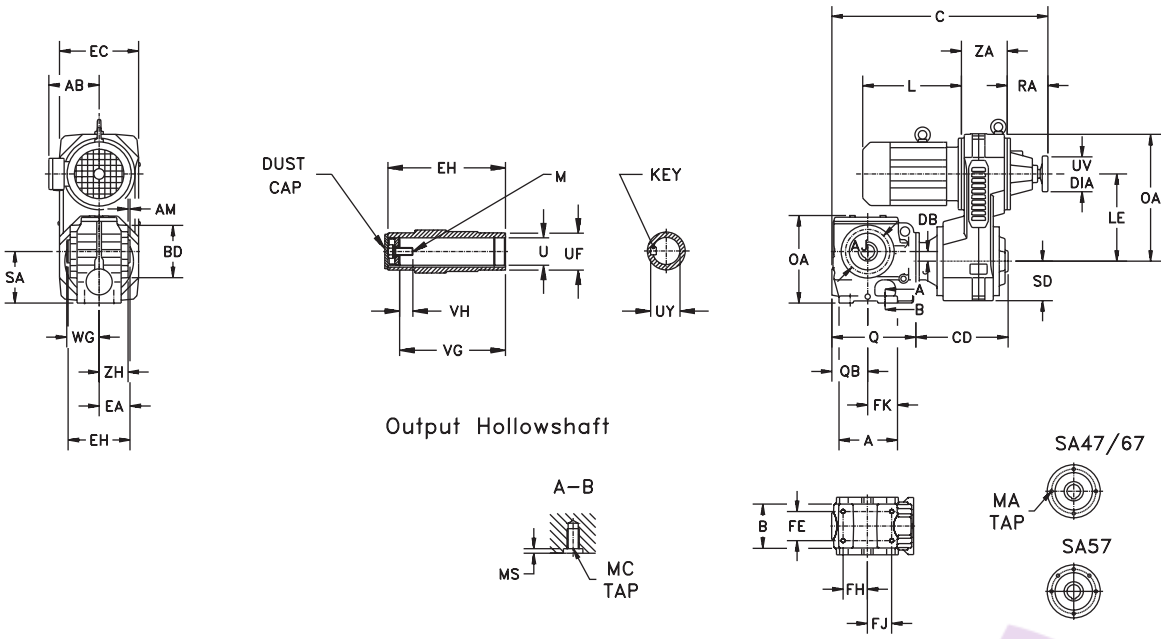

VZ

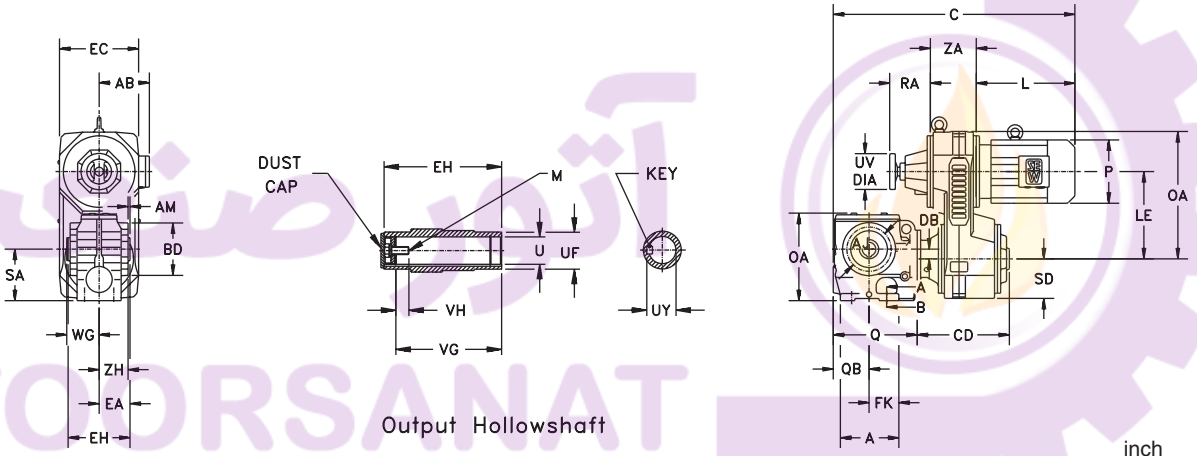

Dimensions are inch / mm

Gearcase																			
Model	**A**	**AJ**	**AM**	**B**	**BD**	**DB**	**EA**	**FE**	**FH**	**FJ**	**FK**	**MA**	**MC**	**MS**	**Q**	**QB**	**SA**	**WG**	**ZH**
SA47	5.00	4.53	0.10	3.70	5.12	0.31	2.36	2.36	1.38	2.05	2.64	M8 x .47	M10 x .79	0.16	6.73	2.95	3.94	2.48	2.26
	127	115	2.5	94	130	8	60	60	35	52	67	M8 x 12	M10 x 20	4	171	75	100	63	57.5
SA57	5.75	4.02	0.12	3.94	4.72	0.79	2.95	2.36	2.30	2.30	2.87	M8 x .47	M10 x .79	0.16	7.36	3.15	4.41	3.07	2.83
	146	102	3	100	120	20	75	60	58.5	58.5	73	M8 x 12	M10 x 20	4	187	80	112	78	72
SA67	7.17	5.12	0.14	5.04	6.10	0.87	3.31	3.46	2.81	3.17	3.76	M12 x .79	M12 x .98	0.20	9.49	4.17	5.51	3.50	3.17
	182	130	3.5	128	155	22	84	88	71.5	80.5	95.5	M12 x 20	M12 x 25	5	241	106	140	89	80.5

Output Shaft								
Model	**EH**	**UF**	**U***	**UY**	**VG**	**VH**	**Key**	**M**
SA47	4.72	1.77	1.250	1.37	4.13	0.67	$\frac{1}{4} \times \frac{1}{4} \times 1\frac{5}{16}$	$\frac{7}{16} - 14 \times 1$
	120	45	30	33.3	105	17	8 x 7 x 40	M10 x 25
SA57	5.91	1.97	1.375	1.52	5.20	0.65	$\frac{5}{16} \times \frac{5}{16} \times 1\frac{13}{16}$	$\frac{1}{2} - 13 \times 1$
	150	50	35	38.3	132	22	10 x 8 x 45	M12 x 30
SA67	6.61	2.56	1.500	1.67	5.67	1.36	$\frac{3}{8} \times \frac{3}{8} \times 2\frac{1}{4}$	$\frac{5}{8} - 11 \times 1\frac{3}{4}$
	168	65	45	48.8	144	29	14 x 9 x 40	M16 x 40

*** Note: See page 18 for tolerances.**

Dimensions subject to change without notice.

آتور صنعت ATOORSANAT
SEW EURODRIVE

VARIGEAR®							
Model	**EC**	**LE**	**OA**	**RA**	**SD**	**UV**	**ZA**
VU/VZ01	6.93 176	7.17 182	10.59 269	3.86 98	2.83 72	3.15 80	3.15 80
VU/VZ11	7.20 183	9.13 232	12.68 322	4.61 117	3.46 88	3.94 100	3.86 98
VU/VZ21	8.94 227	9.65 245	13.98 355	5.12 130	4.33 110	3.94 100	4.72 120
VU/VZ31	11.14 283	12.01 305	17.52 445	5.91 150	5.43 138	4.92 125	5.98 152

VARIGEAR® VU								
Model		**VU01**		**VU11**	**VU21**	**VU31**		
		DT71	**DT80**	**DT90**	**DT100**	**DT100**	**DV112M**	**DV132S**
SA47	**C**	18.23 463	18.23 463	20.00 508	— —	— —	— —	— —
	CD	8.39 213	8.39 213	9.37 238	— —	— —	— —	— —
SA57	**C**	18.86 479	18.86 479	20.63 524	— —	— —	— —	— —
	CD	8.39 213	8.39 213	9.37 238	— —	— —	— —	— —
SA67	**C**	20.71 526	20.71 526	22.48 571	25.12 638	28.15 715	28.15 715	28.15 715
	CD	8.11 206	8.11 206	9.13 232	10.98 279	13.03 331	13.03 331	13.03 331

VARIGEAR® VZ								
Model		**VZ01**		**VZ11**	**VZ21**	**VZ31**		
		DT71	**DT80**	**DT90**	**DT100**	**DT100**	**DV112M**	**DV132S**
SA47	**C**	19.45 494	21.42 544	23.39 594	— —	— —	— —	— —
	CD	8.39 213	8.39 213	9.37 238	— —	— —	— —	— —
SA57	**C**	20.08 510	22.05 560	24.02 610	— —	— —	— —	— —
	CD	8.39 213	8.39 213	9.37 238	— —	— —	— —	— —
SA67	**C**	21.93 557	23.90 607	25.87 657	28.70 729	30.04 763	31.54 801	33.31 846
	CD	8.11 206	8.11 206	9.13 232	10.98 279	13.03 331	13.03 331	13.03 331

Motor							
	VU/VZ01		**VU/VZ11**	**VU/VZ21**	**VU/VZ31**		
	DT71	**DT80**	**DT90**	**DT100**	**DT100**	**DV112M**	**DV132S**
AB	5.43 138	5.43 138	6.73 171	6.89 175	6.89 175	7.40 188	7.40 188
L	7.95 202	9.92 252	10.75 273	12.24 311	12.24 311	13.74 349	15.51 394
P	5.71 145	5.71 145	7.76 197	7.76 197	7.76 197	8.70 221	8.70 221

Dimension AB is to motor conduit box
Eye bolts are removable
Size VU6 is supplied with windless-type control
See page 64 for VARIGEAR® configuration options.
See page 271 for available output shaft options.

Dimensions subject to change without notice.

VU

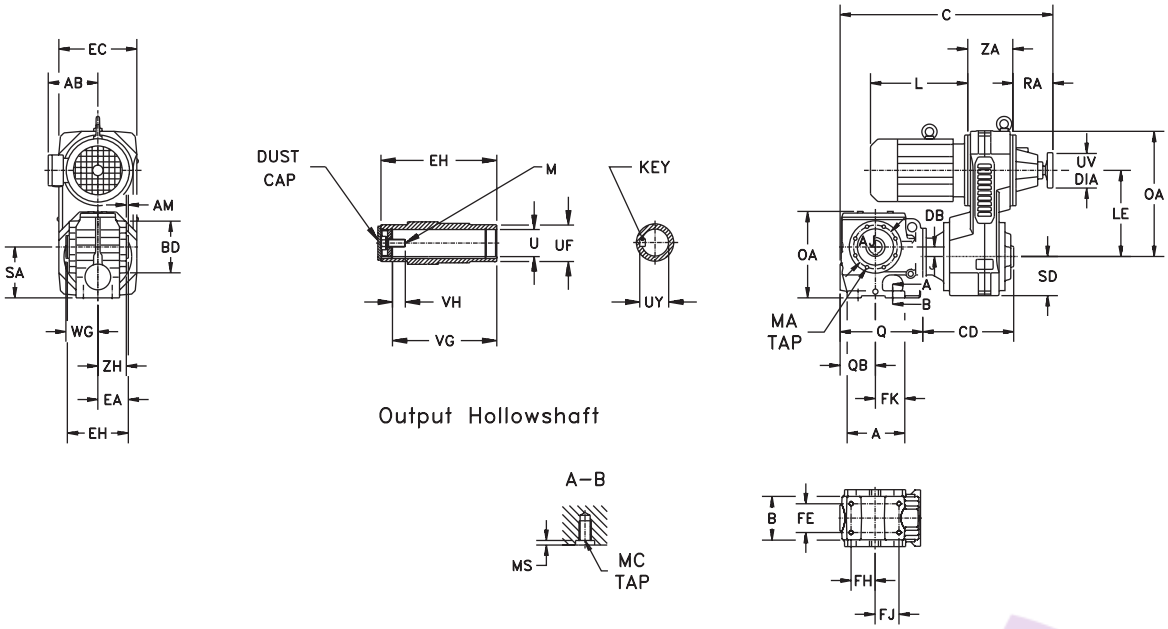

VZ

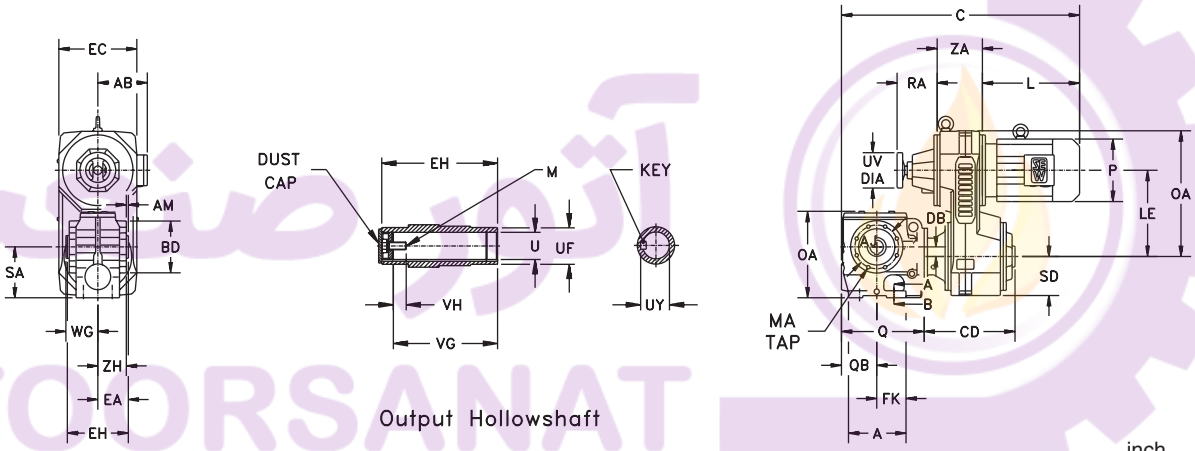

Dimensions are inch / mm

Gearcase															
Model	**A**	**AJ**	**AM**	**B**	**BD**	**DB**	**EA**	**FE**	**FH**	**FJ**	**FK**	**MA**	**MC**	**MS**	**Q**
SA77	8.03 204	6.10 155	0.16 4	6.06 154	7.01 178	1.34 34	4.13 105	4.02 102	3.35 85	3.35 85	4.09 104	M12 x .79 M12 x 20	M16 x 1.26 M16 x 32	0.24 6	11.30 287
SA87	10.24 260	7.09 180	0.20 5	7.64 194	8.46 215	1.48 37.5	4.92 125	4.65 118	4.53 115	4.33 110	4.92 125	M16 x 1.02 M16 x 26	M16 x 1.26 M16 x 32	0.24 6	13.39 340
SA97	11.85 301	8.66 220	0.20 5	9.29 236	10.24 260	2.05 52	5.71 145	6.30 160	5.31 135	4.45 113	5.51 140	M16 x 1.02 M16 x 26	M20 x 1.42 M20 x 36	0.24 6	16.54 420

Output Shaft								
Model	**EH**	**UF**	**U***	**UY**	**VG**	**VH**	**Key**	**M**
SA77	8.27 210	3.15 80	2.000 60	2.22 64.4	7.20 180	1.16 37	$\frac{1}{2} \times \frac{1}{2} \times 2\frac{5}{8}$ 18 x 11 x 63	$\frac{5}{8}_{-11} \times 1\frac{3}{4}$ M20 x 50
SA87	9.84 250	3.74 95	2.375 70	2.65 74.9	8.66 220	1.37 34	$\frac{5}{8} \times \frac{5}{8} \times 3\frac{1}{4}$ 20 x 12 x 110	$\frac{3}{4}_{-10} \times 2$ M20 x 50
SA97	11.42 290	4.72 120	2.750 90	3.03 95.4	10.23 255	1.24 41	$\frac{5}{8} \times \frac{5}{8} \times 3\frac{1}{4}$ 25 x 14 x 140	$\frac{3}{4}_{-10} \times 2$ M24 x 60

*** Note: See page 18 for tolerances.**

Dimensions subject to change without notice.

آتور صنعت ATOORSANAT SEW EURODRIVE

VARIGEAR®							
Model	**EC**	**LE**	**OA**	**RA**	**SD**	**UV**	**ZA**
VU/VZ11	7.20 183	9.13 232	12.68 322	4.61 117	3.46 88	3.94 100	3.86 98
VU/VZ21	8.94 227	9.65 245	13.98 355	5.12 130	4.33 110	3.94 100	4.72 120
VU/VZ31	11.14 283	12.01 305	17.52 445	5.91 150	5.43 138	4.92 125	5.98 152
VU/VZ41	13.70 348	14.96 380	21.77 553	7.44 189	6.69 170	7.87 200	7.09 180
VU51	15.67 398	18.11 460	25.91 658	8.66 220	7.68 195	7.87 200	7.87 200

VARIGEAR® VU											
Model		**VU11**	**VU21**	**VU31**			**VU41**			**VU51**	
		DT90	**DT100**	**DT100**	**DV112M**	**DV132S**	**DV132M**	**DV132ML**	**DV160M**	**DV160L**	**DV180**
SA77	**C**	24.06 611	26.61 676	29.61 752	29.61 752	29.61 752	34.06 865	34.06 865	34.06 865	— —	— —
	CD	8.90 226	10.67 271	12.68 322	12.68 322	12.68 322	15.63 397	15.63 397	15.63 397	— —	— —
SA87	**C**	— —	28.54 725	31.50 800	31.50 800	31.50 800	35.94 913	35.94 913	35.94 913	39.25 997	39.25 997
	CD	— —	10.51 267	12.48 317	12.48 317	12.48 317	15.43 392	15.43 392	15.43 392	17.68 449	17.68 449
SA97	**C**	— —	— —	34.45 875	34.45 875	34.45 875	38.90 988	38.90 988	38.90 988	42.20 1072	42.20 1072
	CD	— —	— —	12.28 312	12.28 312	12.28 312	15.24 387	15.24 387	15.24 387	17.48 444	17.48 444

VARIGEAR® VZ									
Model		**VZ11**	**VZ21**	**VZ31**			**VZ41**		
		DT90	**DT100**	**DT100**	**DV112M**	**DV132S**	**DV132M**	**DV132ML**	**DV160M**
SA77	**C**	27.44 697	30.20 767	31.50 800	32.99 838	34.76 883	36.54 928	38.90 988	38.90 988
	CD	8.90 226	10.67 271	12.68 322	12.68 322	12.68 322	15.63 397	15.63 397	15.63 397
SA87	**C**	— —	32.13 816	33.39 848	34.88 886	36.65 931	38.43 976	40.79 1036	40.79 1036
	CD	— —	10.51 267	12.48 317	12.48 317	12.48 317	15.43 392	15.43 392	15.43 392
SA97	**C**	— —	— —	36.34 923	37.83 961	39.61 1006	41.38 1051	43.74 1111	43.74 1111
	CD	— —	— —	12.28 312	12.28 312	12.28 312	15.24 387	15.24 387	15.24 387

Motor										
	VU/VZ11	**VU/VZ21**	**VU/VZ31**			**VU/VZ41**			**VU51**	
	DT90	**DT100**	**DT100**	**DV112M**	**DV132S**	**DV132M**	**DV132ML**	**DV160M**	**DV160L**	**DV180**
AB	6.73 171	6.89 175	6.89 175	7.40 188	7.40 188	9.13 232	9.13 232	9.13 232	10.04 255	10.55 268
L	10.75 273	12.24 311	12.24 311	13.74 349	15.51 394	15.83 402	18.19 462	18.19 462	19.80 503	22.64 575
P	7.76 197	7.76 197	7.76 197	8.70 221	8.70 221	10.83 275	10.83 275	10.83 275	13.03 331	13.03 331

Dimension AB is to motor conduit box
Eye bolts are removable
Size VU6 is supplied with windless-type control
See page 64 for VARIGEAR® configuration options.
See page 271 for available output shaft options.

2. Available Output Solid Shafts

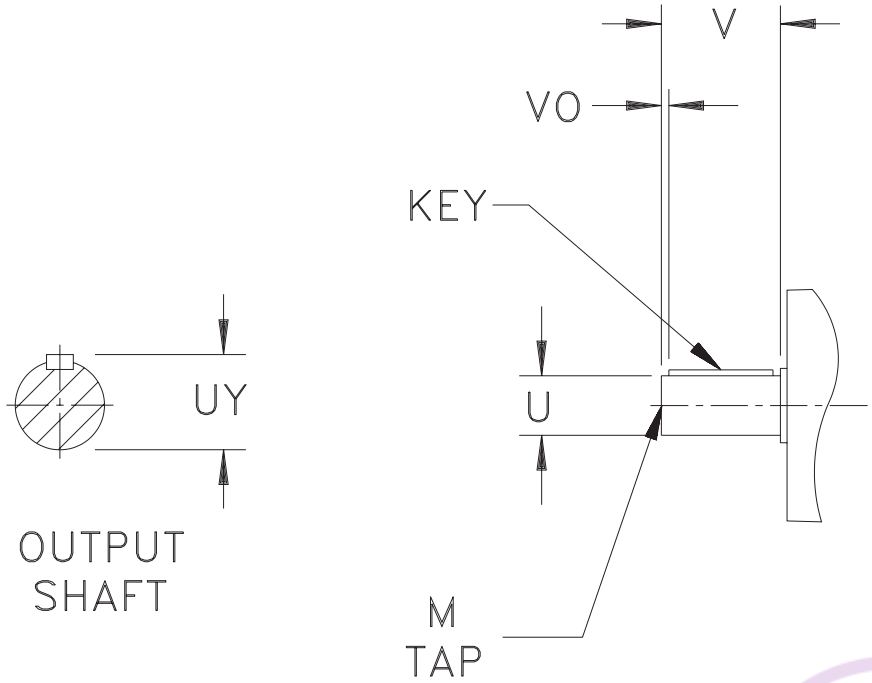

Model	Inch Shafts					Dimensions are inch
	U *	UY	V	VO	Key	M
S/SF37	0.750	0.83	1.57	0.25	3/16 x 3/16 x 1 1/4	1/4 - 20 x 0.63
S/SF47	1.000	1.11	1.97	0.32	1/4 x 1/4 x 1 5/16	3/8 - 16 x 0.87
S/SF57	1.250	1.36	2.36	0.26	1/4 x 1/4 x 1 11/16	1/2 - 13 x 1.12
S/SF67	1.375	1.51	2.76	0.43	5/16 x 5/16 x 1 13/16	1/2 - 13 x 1.12
S/SF77	1.750	1.92	3.54	0.38	3/8 x 3/8 x 2 3/4	5/8 - 11 x 1.38
S/SF87	2.375	2.65	4.72	0.51	5/8 x 5/8 x 3 5/8	3/4 - 10 x 1.61
S/SF97	2.875	3.20	5.51	0.67	3/4 x 3/4 x 4 1/8	3/4 - 10 x 1.61

Model	Metric Shafts					Dimensions are mm
	U *	UY	V	VO	Key	M
S/SF37	20	22.5	40	4	6 x 6 x 32	M6 x 16
S/SF47	25	28	50	5	8 x 7 x 40	M10 x 22
S/SF57	30	33	60	3.5	8 x 7 x 50	M10 x 22
S/SF67	35	38	70	7	10 x 8 x 56	M12 x 28
S/SF77	45	48.5	90	5	14 x 9 x 80	M16 x 36
S/SF87	60	64	120	5	18 x 11 x 110	M20 x 42
S/SF97	70	74.5	140	7.5	25 x 12 x 125	M20 x 42

*** Note: See page 18 for tolerances.**

آتور صنعت ATOORSANAT

Dimensions subject to change without notice.

آتور صنعت ATOORSANAT SEW EURODRIVE

3. Available Output Hollowshafts

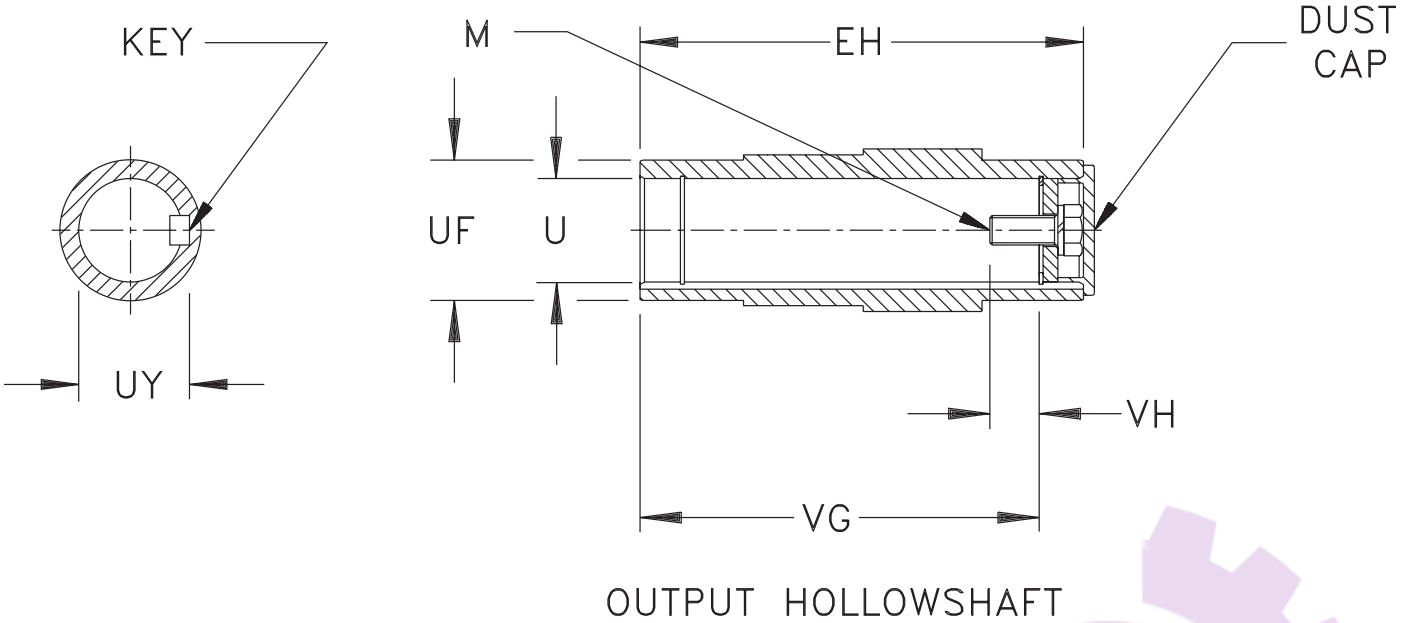

Model	Inch Shafts							Dimensions are inch
	EH	U *	UF	UY	VG	VH	Key	M
SA/SAF37	4.72	0.750	1.38	0.84	4.09	0.37	3/16 x 3/16 x 1 1/4	1/4 - 20 x 5/8
SA/SAF47	4.72	1.250	1.77	1.37	4.13	0.67	1/4 x 1/4 x 1 5/16	7/16 - 14 x 1
SA/SAF57	5.91	1.375	1.97	1.52	5.20	0.65	5/16 x 5/16 x 1 13/16	1/2 - 13 x 1
SA/SAF67	6.61	1.500	2.56	1.67	5.67	1.36	3/8 x 3/8 x 2 1/4	5/8 - 11 x 1 3/4
SA/SAF77	8.27	2.000	3.15	2.22	7.20	1.16	1/2 x 1/2 x 2 5/8	5/8 - 11 x 1 3/4
SA/SAF87	9.84	2.375	3.74	2.65	8.66	1.37	5/8 x 5/8 x 3 1/4	3/4 - 10 x 2
SA/SAF97	11.42	2.750	4.72	3.03	10.23	1.24	5/8 x 5/8 x 3 1/4	3/4 - 10 x 2

Model	Metric Shafts							Dimensions are mm
	EH	U *	UF	UY	VG	VH	Key	M
SA/SAF37	120	20	35	22.8	104	8	6 x 6 x 32	M6 x 16
SA/SAF47	120	30	45	33.3	105	17	8 x 7 x 40	M10 x 25
	120	25	45	28.3	105	17	8 x 7 x 40	M10 x 25
SA/SAF57	150	35	50	38.3	132	22	10 x 8 x 45	M12 x 30
	150	30	50	33.3	132	17	8 x 7 x 50	M10 x 25
SA/SAF67	168	45	65	48.8	144	29	14 x 9 x 40	M16 x 40
	168	40	65	43.3	144	29	12 x 8 x 50	M16 x 40
SA/SAF77	210	60	80	64.4	180	37	18 x 11 x 63	M20 x 50
	210	50	80	53.8	183	32	14 x 9 x 80	M16 x 45
SA/SAF87	250	70	95	74.9	220	34	20 x 12 x 110	M20 x 50
	250	60	95	64.4	220	36	18 x 11 x 100	M20 x 50
SA/SAF97	290	90	120	95.4	255	41	25 x 14 x 140	M24 x 60
	290	70	120	74.9	260	34	20 x 12 x 110	M20 x 50

*** Note: See page 18 for tolerances.**

4. Torque Arm Arrangement

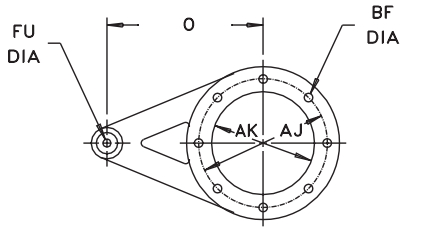

SA37 – SA67

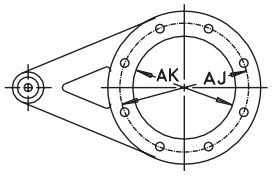

SA77 – SA97

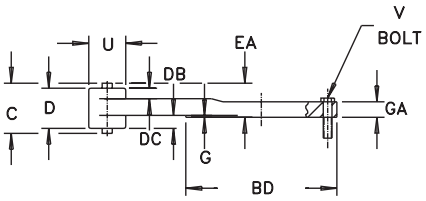

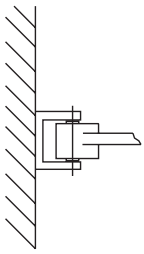

Anchoring of the torque arm

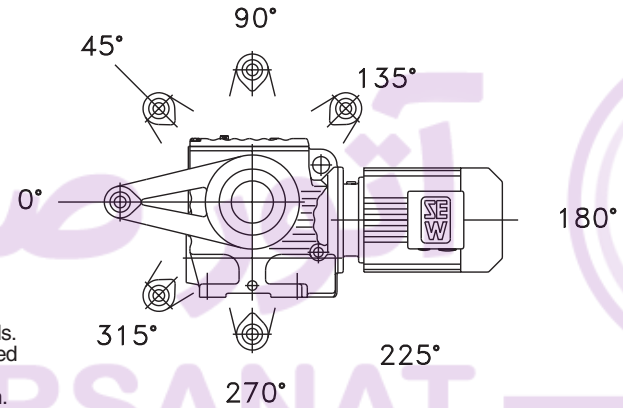

The torque arm can be placed at 45° intervals. If not specified, the torque arm will be supplied at 0°. Not all locations are available. Contact your SEW representative for more information.

Dimensions are inch / mm

Model	AJ	AK	BF	BD	C	D	DB	DC	EA	FU *	G	GA	O	U	V	Part Number
SA37T..	2.95 75	2.36 60	0.26 6.6	3.54 90	1.42 36	1.22 31	0.33 8.5	0.57 14.5	1.02 26	0.41 10.4	0.04 1	0.35 9	4.33 110	1.65 42	M6 x 0.63 M6 x 16	126 994 1
SA47T..	4.53 115	3.23 82	0.35 9	5.35 136	1.42 36	1.22 31	0.61 15.5	0.26 6.5	0.81 20.5	0.41 10.4	1.10 2.5	0.59 15	5.12 130	1.65 42	M8 x 0.98 M8 x 25	644 237 4
SA57T..	4.02 102	3.23 82	0.35 9	4.80 122	1.42 36	1.22 31	0.65 16.5	0.18 4.5	0.73 18.5	0.41 10.4	0.06 1.5	0.59 15	6.30 160	1.65 42	M8 x 0.98 M8 x 25	644 240 4
SA67T..	5.12 130	4.02 102	0.53 13.5	6.18 157	1.42 36	1.22 31	0.61 15.5	0.14 3.5	0.77 19.5	0.41 10.4	0.06 1.5	0.71 18	7.87 200	1.65 42	M12 x 1.38 M12 x 35	644 243 9
SA77T..	6.10 155	4.92 125	0.53 13.5	7.17 182	2.36 60	2.13 54	1.04 26.5	0.53 13.5	1.28 32.5	0.65 16.4	0.08 2	0.71 18	9.84 250	2.36 60	M12 x 1.38 M12 x 35	644 246 3
SA87T..	7.09 180	5.67 144	0.69 17.5	8.58 218	2.36 60	2.13 54	1.32 33.5	0.10 2.5	1.00 25.5	0.65 16.4	0.08 2	0.94 24	12.20 310	2.36 60	M16 x 1.77 M16 x 45	644 249 8
SA97T..	8.66 220	7.28 185	0.69 17.5	10.24 260	3.15 80	2.83 72	1.73 44	0.31 8	1.30 33	0.98 25	0.04 1	1.02 26	14.96 380	3.15 80	M16 x 1.97 M16 x 50	644 252 8

*** Note: See page 18 for tolerances.**

Dimensions subject to change without notice.

آتور صنعت ATOORSANAT SEW EURODRIVE

5. Output Shaft Tap Specifications

Inch Shaft

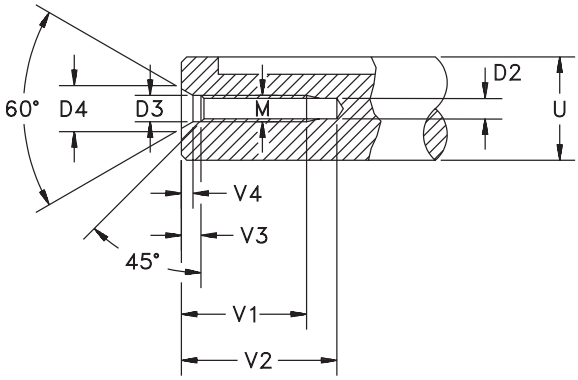

Metric Shaft

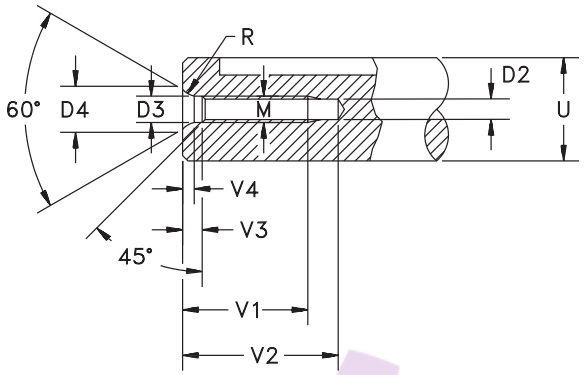

Inch Shaft — Dimensions are inch

Shaft Diameter - U from	Shaft Diameter - U through[1)]	M	D2	D3	D4	V1*	V2 min.	V3**	V4 approximate
0	13/16	1/4 - 20	0.2010	0.256	0.374	0.630	0.787	0.197	0.102
7/8	15/16	5/16 - 18	0.2570	0.327	0.472	0.866	1.102	0.236	0.126
1	1-1/8	3/8 - 16	0.3125	0.374	0.571	0.866	1.102	0.295	0.169
1-1/4	1-3/8	1/2 - 13	0.4219	0.531	0.768	1.122	1.417	0.374	0.205
1-1/2	1-7/8	5/8 - 11	0.5312	0.654	0.984	1.378	1.772	0.472	0.283
2	3-1/4	3/4 - 10	0.6562	0.795	1.181	1.614	2.047	0.591	0.335
3-3/8 and over		1 - 8	0.8750	1.000	1.457	2.126	2.677	0.709	0.394

Metric Shaft — Dimensions are mm

Shaft Diameter - U from	Shaft Diameter - U through[1)]	M	D2	D3	D4	R	V1*	V2 min.	V3**	V4 approximate
7	10	M3	2.5	3.2	5.3	4.0	9.0	12.0	2.6	1.8
10	13	M4	3.3	4.3	6.7	5.0	10.0	14.0	3.2	2.1
13	16	M5	4.2	5.3	8.1	6.3	12.5	17.0	4.0	2.4
16	21	M6	5.0	6.4	9.6	8.0	16.0	21.0	5.0	2.8
21	24	M8	6.8	8.4	12.2	10.0	19.0	25.0	6.0	3.3
24	30	M10	8.5	10.5	14.9	16.0	22.0	30.0	7.5	3.8
30	38	M12	10.2	13.0	18.1	20.0	28.0	37.0	9.5	4.4
38	50	M16	14.0	17.0	23.0	25.0	36.0	45.0	12.0	5.2
50	85	M20	17.5	21.0	28.4	31.5	42.0	53.0	15.0	6.4
85	130	M24	21.0	25.0	34.2	40.0	50.0	63.0	18.0	8.0
130 and over		M30	26.5	31.0	42.6	50.0	63.0	85.0	20.0	10.0

[1)] up to and including this diameter
*V1 inch tolerance +.079 / -0 , metric tolerance +2 / -0.
**V3 +.039 *inch* tolerance only.
*** Note: See page 18 for tolerances.**

6. Customer Solid Shaft & Assembly/Disassembly Tool

When using conventional tools to remove a shaft mounted gear unit, the dismantling forces are exerted via the reducer housing and bearings and may damage the machine's drive shaft or the gear unit. To simplify the removal from the machine's drive shaft, a tool can be made as shown. A round, keyed nut (2) is inserted into the free space between the end of the machine drive shaft and the snapring in the gear unit's hollowshaft. A removal bolt (1) is screwed into the nut and presses a disc (3) against the end face of the machine drive shaft, forcing the machine drive shaft out of the hollowshaft. Please note the securing bolt normally supplied with the gear unit's hollowshaft must be replaced with a bolt as shown and the customer solid shaft should be manufactured in accordance with the dimensions shown here.

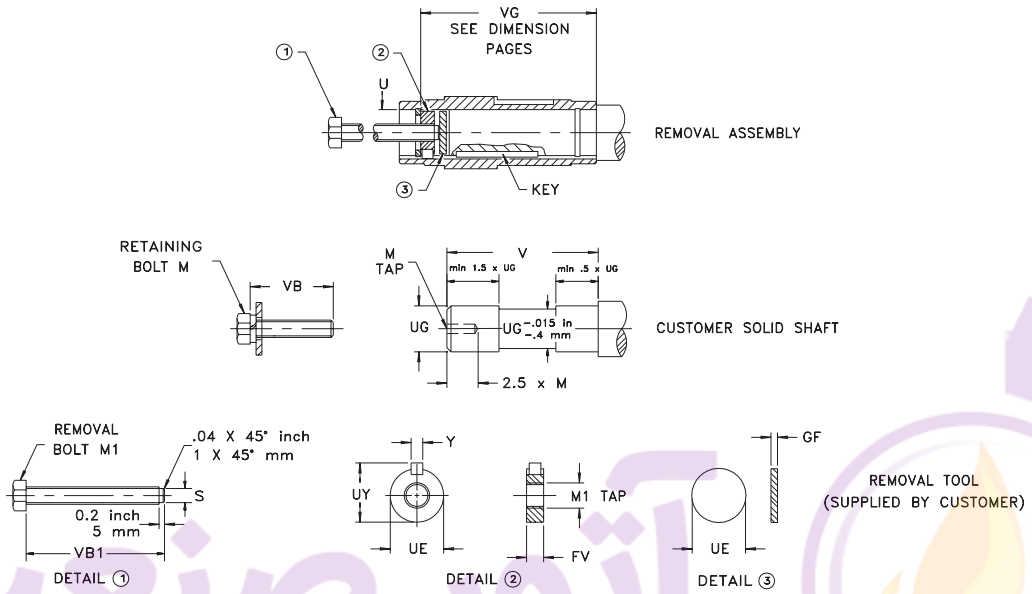

Tolerance for Shaft Diameter UG				
UG		*Load Class		
		I	II	III
Inch	.750	+.0005 -.0006	+.0009 -.0003	+.0011 -0
	1.250 - 1.500	+0 –.0011	+.0004 –.0007	+.0007 –.0004
	2.000 – 2.938	+0 –.0009	+.0005 –.0005	+.0008 –.0001
	3.250 – 4.000	+0 –.0012	+.0005 –.0007	+.0010 –.0003
Metric (mm)	20 - 30	+0 -.013	+.009 -.004	+.015 +.002
	35 - 50	+0 -.016	+.011 -.005	+.018 +.002
	60 - 80	+0 -.019	+.012 -.007	+.021 +.002
	90 - 120	+0 -.022	+.013 -.009	+.025 +.003

*Load Class I = Uniform Load and $\frac{J_L}{J_m} \leq 0.2$

Load Class II = Moderate Shock Load and $\frac{J_L}{J_m} \leq 3.0$

Load Class III = Heavy Shock Load and $\frac{J_L}{J_m} \leq 10$

where: J_L = Load Inertia reflected to reducer input and J_m = Motor Inertia

Dimensions subject to change without notice.

آتور صنعت ATOORSANAT
SEW EURODRIVE

Inch Bore Hollowshaft													Dimensions are inch
Model	**FV**	**GF**	**M**	**M1**	**S**	**U***	**UE****	**UG***	**UY Max.**	**V**	**VB**	**VB1**	**Y Max.**
SA/SAF37	.39	.20	1/4 – 20	3/8 – 24	.25	.750	.745	.750	.82	3.23	1.50	4.75	.187
SA/SAF47	.59	.20	7/16 – 14	5/8 – 18	.50	1.250	1.245	1.250	1.35	3.23	2.00	6.00	.250
SA/SAF57	.59	.20	1/2 – 13	5/8 – 18	.50	1.375	1.370	1.375	1.50	4.29	2.00	6.00	.3125
SA/SAF67	.79	.20	5/8 – 11	1– 14	.81	1.500	1.495	1.500	1.65	4.53	2.75	8.50	.375
SA/SAF77	.79	.20	5/8 – 11	1– 14	.81	2.000	1.995	2.000	2.20	6.14	2.75	8.50	.500
SA/SAF87	.94	.31	3/4 – 10	1 1/4 – 12	1.00	2.375	2.370	2.375	2.63	7.25	3.50	10.00	.625
SA/SAF97	.94	.31	3/4 – 10	1 1/4 – 12	1.00	2.750	2.745	2.750	3.01	8.83	3.50	14.00	.625

Metric Bore Hollowshaft													Dimensions are mm
Model	**FV**	**GF**	**M**	**M1**	**S**	**U***	**UE****	**UG***	**UY Max.**	**V**	**VB**	**VB1**	**Y Max.**
SA/SAF37	10	5	M6	M10 × 1.5	7	20	19.9	20	22.5	82	40	120	6
SA/SAF47	15	5	M10	M16 × 1.5	13	25	24.9	25	28	82	50	150	8
SA/SAF47	15	5	M10	M16 × 1.5	13	30	29.9	30	33	82	50	150	8
SA/SAF57	15	5	M10	M16 × 1.5	13	30	29.9	30	33	109	50	150	8
SA/SAF57	15	5	M12	M16 × 1.5	13	35	34.9	35	38	109	55	150	10
SA/SAF67	20	5	M16	M24 × 1.5	20	40	39.9	40	43	114	70	220	12
SA/SAF67	20	5	M16	M24 × 1.5	20	45	44.9	45	48	114	70	220	14
SA/SAF77	20	5	M16	M24 × 1.5	20	50	49.9	50	53.5	153	70	220	14
SA/SAF77	24	8	M20	M30 × 1.5	26	60	59.9	60	64	143	90	250	18
SA/SAF87	24	8	M20	M30 × 1.5	26	60	59.9	60	64	183	90	250	18
SA/SAF87	24	8	M20	M30 × 1.5	26	70	69.9	70	74.5	182	90	250	20
SA/SAF97	24	8	M20	M30 × 1.5	26	70	69.9	70	74.5	222	90	360	20
SA/SAF97	24	8	M24	M30 × 1.5	26	90	89.9	90	95	217	100	360	25

*** Note: See page 18 for U dimension tolerances. See previous page for UG dimension tolerances.**
****inch tolerance is -.01, metric tolerance is -.02**

ATOORSANAT

AC Electric Motors

The SEW-Eurodrive AC motors and brakemotors are designed for continuous operation under difficult operating conditions. They are supplied integral to an SEW-Eurodrive gear unit or as foot mounted or flange mounted design.

1. Mechanical Properties

1.1. Enclosures

The AC motors are provided as totally enclosed fan cooled (TEFC) in accordance with NEMA MG1-1.26.2-1993. They are also provided as an IP54 enclosure rating in accordance with DIN 40050 as standard or with IP55 and IP65 ratings as a modification.

1.2. Bearings

The following bearings are used for the appropriate motor frame sizes:

Frame Size	Driving End Side A		Fan End Side B
	Geared	Flanged and Footed	Geared, Flanged and Footed
DT71-80	6303 C3-2RS	6204 C3-2RS	6203 C3-2RS
DT90-100	6306 C3-2RS		6205 C3-2RS
DV112-132S	6307 C3-2RS	6208 C3-2RS	6207 C3-2RS
DV132M/ML-160M	6309 C3-2Z		6209 C3-2Z
DV160L-180	6312 C3-2Z		6213 C3-2Z
DV200-225	6314 C3-2Z		6314 C3-2Z

1.3. Insulation Classes

All single speed and multi-speed AC motors have Class F insulation as standard. Class H insulations can be provided as a modification.

1.4. Corrosion Protection

All SEW-Eurodrive AC squirrel-cage motors and brakemotors are available with special corrosion protection, Severe Duty, for chemically aggressive and wet environments.

1.5. Motor Options

SEW-Eurodrive can supply motors to be used for hoist and crane duty, or for hazardous locations. Motor canopies, high inertia flywheel fans for smooth starting, special duty cycle windings, etc. are available. Please consult your SEW-Eurodrive representative for details.

آتور صنعت ATOORSANAT

آتور صنعت ATOORSANAT SEW EURODRIVE

2. Electrical Properties

2.1. Supply Voltages and Frequencies

SEW-Eurodrive AC motors can be supplied suitable for operation on any voltage in the range of 200-660 volts. The standard voltages are 230/460V and 575V. All other voltages are available as a option. The standard operating frequency is 60Hz with any frequency between 40Hz and 60Hz available as a option.

2.2. Winding Connection

SEW-Eurodrive standard motor connection diagrams are shown on page 329 . Two-speed AC motors where the high speed is double the low speed; for example 4/2 pole (1800/3600 rpm) and 8/4 pole (900/1800 rpm), are provided with a single winding (tapped wound) motor connection as standard. All other two-speed AC motors, for example 6/2 pole (1200/3600 rpm), 8/2 pole (900/3600 rpm), etc. have a separate winding motor connection.

Other motor connections can be optionally provided upon request. Please submit full details to your SEW-Eurodrive representative.

2.3. Ambient Temperature and Altitude

The ratings of all motors in this catalog are based on continuous operation at 40°C ambient temperature and a maximum elevation of 3300 feet above sea level. For higher ambient temperatures or greater installation heights it is necessary to reduce the motor power rating per Diagrams 1 and 2 below. The nameplate data remains unchanged.

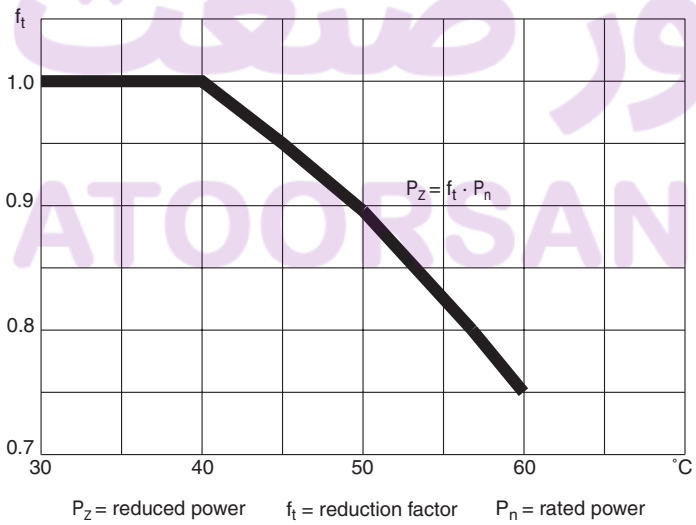

Diagram 1
Power Reduction as a function of ambient temperature

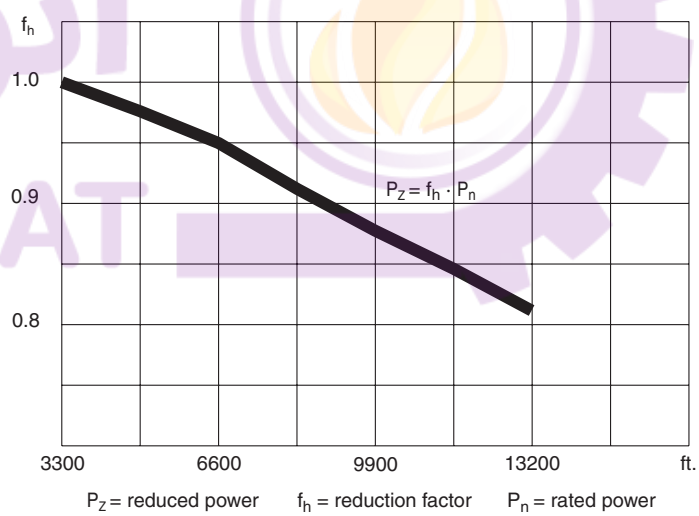

Diagram 2
Power reduction as a function of elevation

3. Guidance On Motor Selection

3.1. Duty Types

All motors in this catalog are based on continuous operation (S1), i.e. operation with a constant load whose duration is sufficient to reach the thermal steady state condition.

S2 is a short-term operation, i.e. operation with a constant load for a specified limited time followed by a pause until the ambient temperature is reached once again.

S3 is a periodic operation not under the influence of the start-up, consisting of a sequence of similar cycles each comprising a period with constant load and a pause. The starting current should not markedly affect the warming-up. Maximum period of 10 minutes.

If a motor is designed for 100% continuous duty, S1, and a shorter cycle duration factor is required, the motor power can be increased according for the following table:

Operating Type			Power Increase Factor
S2	Operation duration	60 min	1.1
		30 min	1.2
		10 min	1.4
S3	Cyclic duration factor, ED	60%	1.1
		40%	1.15
		25%	1.3
		15%	1.4

$$ED = \frac{\text{Sum of operation periods}}{\textit{cycle time}} \cdot 100\%$$

3.2. Start-Stop Frequency

The permissible start-stop frequencies for motors can be determined by the following the formula for Z and Diagrams 3, 4 and 5.

$$Z = Z_O \cdot K_J \cdot K_M \cdot K_P$$

Z_O	No-load start-stop frequency with 50% ED
J_M	Moment of inertia of the motor
J_Z	Reflected moment of inertia of the load and moment of inertia of the flywheel fan (if used)
T_a	Load torque during acceleration
T_A	Average starting torque of the motor
P	Power requirement after attaining full speed
P_n	Rated power of the motor

After determination of the permissible starting frequency for the motor it is necessary to check whether the permissible starting frequency is also acceptable for the brake. Please see the brake data section for permissible brake work.

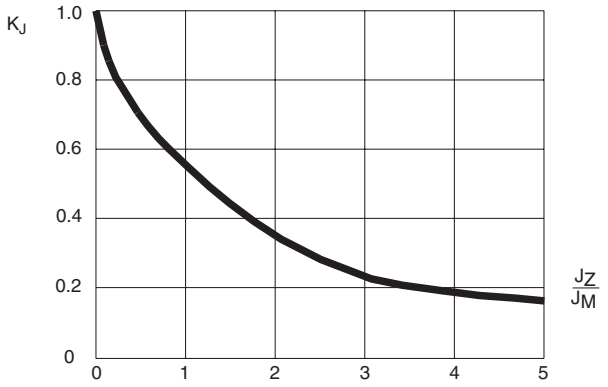

Diagram 3
As a function of the load inertia

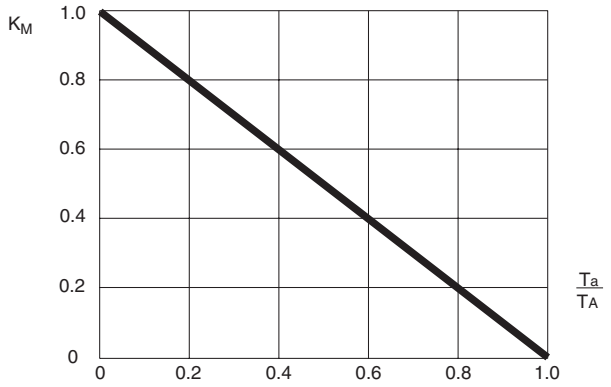

Diagram 4
As a function of the torque during start

4. Motor Protection

The correct selection of motor protective equipment determines to a very large degree the operational reliability and life of a motor. We differentiate between current dependent protection and thermal protective devices. The following table illustrates the different types of motor protection.

Fuses installed in electrical supply lines do not protect the motor against overloads. The fuses merely protect the motor switchgear and supply cables in the event of short circuits.

Standard overload relays for motors are adequate protection under normal operating conditions which involve relatively low starting frequencies and relatively short acceleration times coupled with low starting currents. However, when relatively high starting cycles are required or the motor is required to start against considerable loads, overload relays are unsuitable because the thermal time constant of motor and relay are not matched and the relays invariably trip out when set to the correct rated current.

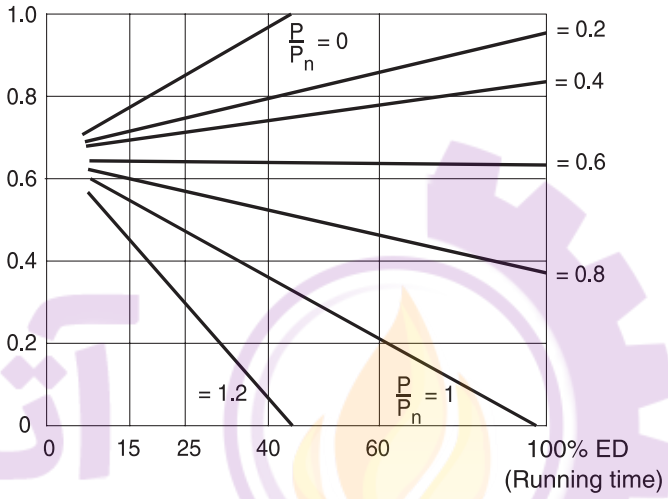

Diagram 5
As a function of the power requirement and the percentage of the time the motor is running

Only motors incorporating positive temperature coefficient thermistors offer full protection against thermal overloading. Motors so equipped can be used for operating conditions with high frequency starting, starting against heavy masses and voltage and frequency fluctuations.

Refer to the table below for the various protection measures and their effectiveness:

	Current Dependent Protection Fuses	Overload Relays (Heaters)	Thermal Protective Device with PTC Thermistor Protection
Excess current 200% I_N	N	E	E
Heavy starts Reversing operation	N	C	E
Starts up to 30/hour	N	C	E
Stalling	C	C	C
Starting on two phases	N	C	E
Voltage deviations	N	E	E
Frequency deviations	N	E	E
Insufficient motor cooling	N	N	E

N - No Protection
C - Conditional Protection
E - Excellent Protection

5. Overhung Load - OHL

Overhung Loads, OHL, are a combination of live loads acting at right angles to the drive shaft caused by gears, sprockets, pulleys, couplings, etc., as well as dead loads applied directly on the shaft.

These overhung loads subject shaft bearings and shafts to stresses which, if exceeded, may cause premature failure of bearings and/or shaft breakage from bending fatigue.

5.1. Determination of Overhung Load

When determining the resulting overhung load, the type of transmission element mounted on the shaft end must be considered and a transmission element factor (f_z) must be included. The overhung load exerted on the output shafts can be calculated from the following formula. The resultant overhung load (F) must not exceed the permissible overhung load for the selected motor.

$$F = \frac{2T_n}{d_o} \cdot f_z$$

F — equivalent OHL in lbs.
T_n — motor torque (lb-in.)
d_o — pitch diameter of the gear or sheave in inches
f_z — transmission element factor

The transmission element factor (f_z) takes into account an additional radial force that is imposed on the shaft due to the type of transmission element: gear or sheave. There are gear teeth separating forces, pre-tensioning of belts, etc. that must be taken into account to determine the total equivalent radial loads. The following values of f_z should be used:

Transmission Element	f_Z Factor
Spur or helical gears ≥ 17 teeth	1.00
Spur or helical gears < 17 teeth	1.15
V-belt pulleys	1.75
Flat belt pulleys	2.50
Timing belt pulleys	1.30

5.2. Permissible Output Shaft Loads

The output shaft of the SEW-Eurodrive motors are capable of accepting the axial and radial loads normally encountered by the mounting of gears, belt pulleys, and shaft couplings. The permissible OHL under the most unfavorable conditions which can be applied at the midpoint of the shaft extension is shown in the tables below as F_{Ra} in lbs. When the force is not applied at the midpoint of the shaft extension, the F_{Ra} value must be adjusted according to the OHL conversion formulas.

Permissible axial loads are shown in the tables below as F_{Aa}.

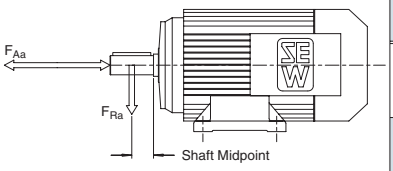

Foot Mounted Motors

RPM Poles	Permissible Overhung Loads F_{Ra} (lb) Permissible Axial Loads F_{Aa} (lb)												
	Motor Frame Size												
	71	80	90	100	112	132S	132M	132ML	160M	160L	180	200	225
900	153	207	288	382	393	427	585	810	810	855	1260	1350	—
8	45	54	72	90	108	126	144	216	216	216	288	450	—
1200	144	189	270	342	360	393	540	742	742	765	1125	1237	—
6	36	45	54	72	90	108	126	180	180	180	252	427	—
1800	126	162	234	292	315	337	450	585	585	697	1012	1057	1575
4	27	36	47	61	61	61	90	144	144	144	216	540	540
3600	90	117	162	216	220	247	326	450	450	517	776	832	—
2	18	22	32	43	45	47	72	108	108	108	180	416	—

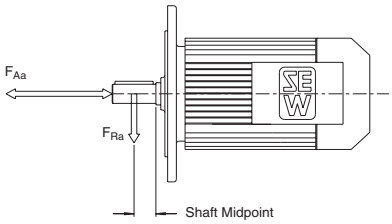

Flange Mounted Motors

RPM Poles	Permissible Overhung Loads F_{Ra} (lb) Permissible Axial Loads F_{Aa} (lb) Motor Frame Size												
	71	80	90	100	112	132S	132M	132ML	160M	160L	180	200	225
900	191	258	360	472	495	540	720	1035	1035	1080	1575	1687	—
8	56	67	90	112	135	157	180	270	270	270	360	562	—
1200	180	236	337	427	450	495	652	922	922	967	1417	1530	—
6	45	56	67	90	112	135	157	225	225	225	315	540	—
1800	157	202	292	371	393	427	562	720	720	877	1260	1327	1957
4	32	45	56	78	78	78	112	180	180	180	270	675	675
3600	112	146	202	270	270	292	405	562	562	652	967	1035	—
2	22	29	40	54	56	58	90	135	135	135	225	517	—

5.3. Output OHL Conversion

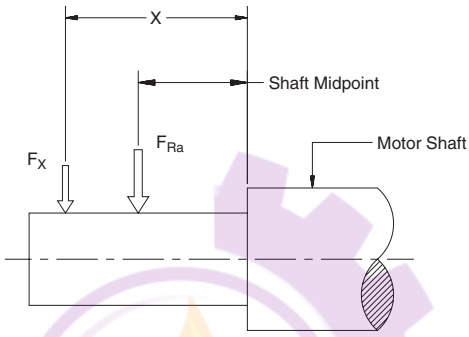

If the resultant OHL acts at a point other than at the midpoint of the output shaft extension, the permissible OHL (F_X), must be determined at the point of the load application.

The permissible OHL is the smaller of the two values F_{XL} or F_{XW} obtained from the following calculations and is denoted as F_X. The permissible OHL (F_X) **must be** greater than the calculated equivalent overhung load (F).

$F_{XL} = F_{Ra} \cdot \frac{c}{d+x}$ (lb) Permissible OHL based on bearing capacity	F_{Ra} (lb)	— Permissible overhung load at the midpoint of the output shaft extension
or	X (in.)	— Distance from the shoulder on the shaft to the application point of load
	F_X (lb)	— Permissible overhung load at the point X
$F_{XW} = \frac{a \cdot 10^3}{b+x}$ (lb) Permissible OHL based on shaft stress	a (lb-in)	— Constant - see chart for values
	b,c, d (in.)	— Constant - see chart for values

Note: F_{XW} applies only at motor rated torque, T_n.

Motor Frame Size	a (lb-in) Number of Poles				in.		
	2	4	6	8	b	c	d
DT71	0.10	0.14	0.16	0.17	0.54	6.25	5.66
DT80	0.15	0.21	0.25	0.27	0.54	8.42	7.63
DT90	0.24	0.35	0.40	0.43	0.52	8.97	7.98
DT100	0.37	0.51	0.59	0.66	0.56	10.66	9.48
DV112M	0.47	0.67	0.77	0.84	0.95	11.29	10.11
DV132S	0.62	0.85	0.99	1.08	0.95	13.46	11.88
DV132M	0.77	1.06	1.27	1.38	0.79	13.56	11.99
DV132ML	1.06	1.38	1.75	1.92	0.79	15.93	14.35
DV160M	1.33	1.73	2.19	2.39	0.79	16.52	14.35
DV160L	1.57	2.12	2.32	2.59	0.87	17.15	14.98
DV180	2.35	3.07	3.42	3.82	0.87	19.98	17.81
DV200	1.80	2.29	2.68	2.92	—	21.16	18.99
DV225	—	4.34	—	—	—	24.67	21.91

آتور صنعت ATOORSANAT

Technical Data

1.Synchronous Speed 3600 rpm @60 Hz

- Continuous Duty - 40° Ambient - up to 3300 ft. Elevation

Frame Size	P_n		n_n	I_n Amp			I_a/I_n	T_n	T_a/T_n	T_k/T_n	Cos	η	Code	J_m lb-ft²		Z_o Starts/Hr.		T_B	Weight lbs.	
	hp	kW	rpm	230V	460V	575V	%	lb-in.	%	%	φ	%	Letter	*	**	BG[2]	BGE[3]	lb-in.	*	**
DT71K2	0.33	0.25	3100	1.65	0.83	0.66	230	6.80	170	160	0.85	45	E	.00616	.00836	3400	4300	22	13	19
DT71C2	0.5	0.37	3300	1.68	0.84	0.67	330	9.50	170	160	0.91	61	D	.0104	.0125	2500	3300	44	15	22
DT71D2	0.75	0.55	3300	2.8	1.41	1.13	340	14.1	180	190	0.89	55	F	.0109	.0130	2100	2700	44	15	22
DT80K2	1	0.75	3300	3.50	1.75	1.40	400	19.2	200	200	0.86	62	F	.0158	.0177	1700	2100	88	22	28
DT80N2	1.5	1.1	3300	4.65	2.3	1.85	390	28.2	210	190	0.84	71	E	.0207	.0228	1400	1700	88	25	32
DT90S2	2	1.5	3300	6.6	3.3	2.65	400	38.4	220	210	0.88	65	F	.0594	.0722	1000	1300	177	35	57
DT90L2	3	2.2	3330	8.9	4.45	3.55	470	56	250	250	0.86	72	F	.0808	.0936	920	1100	177	40	62
DT100L2	5	3.7	3370	13.0	6.5	5.2	560	93	200	250	0.94	76	G	.126	.139	560	760	354	60	82
DV132S2	7.5	5.5	3480	18.3	9.1	7.3	690	134	260	260	0.88	86	H	.346	.375	—	430	664	105	139
DV132M2	10	7.5	3500	26.5	13.2	10.6	700	181	220	270	0.86	82	J	.665	.769	—	430	885	145	198
DV132ML2	12.5	9.2	3490	31.5	15.7	12.6	700	223	260	270	0.87	83	H	.784	.888	—	360	1328	165	220
DV160M2[1]	15	11	3500	36.5	18.2	14.5	680	266	260	270	0.88	86	H	.945	1.049	—	310	1328	185	240
DV160L2[1]	20	15	3510	52	26	21.0	680	361	250	290	0.90	80	H	2.197	2.449	—	95	1770	326	419
DV180M2[1]	25	18.5	3510	59	29.5	23.5	680	445	260	230	0.90	87	H	2.660	2.912 3.164[4]	—	60	2212 2212[4]	386	476 485[4]
DV180L2[1]	30	22	3510	69	34.5	28.0	630	530	290	230	0.90	89	G	3.064	3.316 3.567[4]	—	50	2655 2655[4]	410	503 512[4]

***Without Brake**
****With Brake**
[1] **To assure a long life of the brake lining do not mechanically brake at speeds above 1800 rpm. The motor must be dynamically braked to 1800 rpm.**
[2] **Values with BG rectifier (standard for frame size 100L and smaller)**
[3] **Values with BGE rectifier (standard for frame size 112M and larger)**
[4] **Double Disc Brake**

Abbreviations	
P_n	Rated Power
n_n	Full Load Speed
I_n	Full Load Current
I_a / I_n	Starting Current Ratio (Locked Rotor)
T_n	Full Load Torque
T_a / T_n	Starting Torque Ratio

Abbreviations	
T_k / T_n	Breakdown Torque Ratio
Cos φ	Power Factor
η	Motor Efficiency
J_m	Motor Inertia
Z_0	Permissible no-load frequency at 50% ED
T_B	Maximum Brake Torque

آتور صنعت ATOORSANAT SEW EURODRIVE

2.Synchronous Speed 1800 rpm @ 60Hz

- Continuous Duty - 40°C Ambient - up to 3300 ft Elevation

Frame Size	P_n		n_n	I_n Amp			I_a/I_n	T_n	T_a/T_n	T_k/T_n	Cos	η	Code	J_m lb-ft²		Z_o Starts/Hr.		T_B	Weight lbs.	
	hp	kW	rpm	230V	460V	575V	%	lb-in.	%	%	φ	%	Letter	*	**	BG[2]	BGE[3]	lb-in.	*	**
DT71K4	0.25	0.18	1700	1.10	0.55	0.40	338	9.3	185	225	0.67	62	G	.0062	.0084	9000	9000	22	13	19
DT71C4	0.33	0.25	1720	1.32	0.66	0.50	489	12.1	265	280	0.66	72	J	.0104	.0125	7800	9000	44	15	22
DT71D4	0.5	0.37	1700	2.00	1.00	0.80	400	18.5	215	225	0.71	68	H	.0104	.0125	5200	9000	44	15	22
DT80K4	0.75	0.55	1700	2.90	1.45	1.20	445	27.8	245	270	0.67	74	H	.0156	.0177	3700	8000	88	22	28
DT80N4	1	0.75	1700	3.70	1.85	1.50	486	37.1	300	270	0.69	75.5	J	.0207	.0228	2800	7500	88	25	32
DT90S4	1.5	1.1	1740	5.20	2.60	2.10	612	54.3	300	340	0.69	77	K	.0594	.0722	2000	5000	177	35	57
DT90L4	2	1.5	1720	6.2	3.10	2.50	694	73.3	325	340	0.76	80	K	.0789	.0936	1500	3800	177	40	62
DT100LS4	3	2.2	1720	8.6	4.30	3.4	651	110	300	305	0.80	81.5	J	.101	.114	1000	2700	354	51	73
DT100L4	5	3.7	1680	13.6	6.8	5.4	574	188	260	250	0.84	81.5	G	.126	.139	800	2000	354	60	82
DV112M4	5.4	4.0	1730	14.0	7.0	5.6	703	197	280	285	0.82	85.5	J	.233	.262	—	1400	487	84	110
DV132S4	7.5	5.5	1720	18.8	9.4	7.5	670	275	275	275	0.85	86.5	H	.416	.445	—	1200	664	106	139
DV132M4	10	7.5	1740	27.4	13.7	11.0	545	362	255	225	0.78	87.5	G	.655	.769	—	1000	885	146	198
DV132ML4	12.5	9.2	1740	32.8	16.4	13.1	583	453	280	230	0.80	88.5	G	.783	.887	—	900	1328	165	220
DV160M4	15	11	1740	40	20	16.0	530	534	280	215	0.79	88.5	G	.945	1.049	—	700	1328	185	240
DV160L4	20	15	1760	54	27	21.6	537	716	300	190	0.79	89.5	G	2.197	2.449	—	560	1770	326	419
DV180M4	25	18.5	1760	63	31.5	25.2	533	895	260	165	0.82	88.5	F	2.660	2.912 3.164[1]	—	450	2655 2655[1]	386	476 485[1]
DV180L4	30	22	1760	80	40	32.0	528	1074	290	175	0.79	88.5	G	3.064	3.316 3.567[1]	—	400	2655 2655[1]	410	503 512[1]
DV200L4	40	30	1760	95	47.5	38	581	1432	280	190	0.89	90.2	F	5.558	5.809 6.061[1]	—	330	2655 5310[1]	538	650 659[1]
DV225S4	50	37	1760	118	59	47.2	559	1790	310	180	0.89	90.2	F	7.149	7.400 7.652[1]	—	250	2655 5310[1]	653	765 774[1]
DV225M4	60	45	1760	140	70	56.0	620	2149	310	200	0.88	91.7	G	8.479	8.730 8.982[1]	—	200	2655 5310[1]	717	831 840[1]

***Without Brake**
****With Brake**
[1] **Double Disc Brake**
[2] **Values with BG rectifier (standard for frame size 100L and smaller)**
[3] **Values with BGE rectifier (standard for frame size 112M and larger)**

Abbreviations	
P_n	Rated Power
n_n	Full Load Speed
I_n	Full Load Current
I_a / I_n	Starting Current Ratio (Locked Rotor)
T_n	Full Load Torque
T_a / T_n	Starting Torque Ratio

Abbreviations	
T_k / T_n	Breakdown Torque Ratio
Cos φ	Power Factor
η	Motor Efficiency
J_m	Motor Inertia
Z_0	Permissible no-load frequency at 50% ED
T_B	Maximum Brake Torque

3.Synchronous Speed 1200 rpm @ 60Hz

- Continuous Duty - 40°C Ambient - up to 3300 ft Elevation

Frame Size	P_n		n_n	I_n Amp			I_a/I_n	T_n	T_a/T_n	T_k/T_n	Cos	η	Code	J_m lb-ft²		Z_o Starts/Hr.		T_B	Weight lbs.	
	hp	kW	rpm	230V	460V	575V	%	lb-in.	%	%	φ	%	Letter	*	**	BG[2]	BGE[3]	lb-in.	*	**
DT71C6	0.25	0.18	1130	0.98	0.49	0.39	384	13.9	195	235	0.69	70	G	.0157	.0178	6800	10000	44	15	22
DT71D6	0.33	0.25	1130	1.6	0.80	0.64	329	18.4	205	240	0.64	64.5	H	.0157	.0178	6800	10000	44	15	22
DT80K6	0.5	0.37	1140	2.5	1.25	1.00	340	27.6	220	270	0.57	71.5	H	.0245	.0266	4600	8500	88	22	28
DT80N6	0.75	0.55	1120	3.1	1.55	1.24	342	42.2	220	240	0.68	70	G	.0335	.0356	4000	7000	88	25	32
DT90S6	1	0.75	1140	4.8	2.4	1.92	400	55	260	300	0.58	72	J	.0594	.0722	3200	6000	177	35	57
DT90L6	1.5	1.1	1140	6.0	3.0	2.40	447	83	260	280	0.62	75.5	J	.0808	.0936	2800	5000	177	40	62
DT100L6	2	1.5	1140	7.0	3.5	2.8	477	111	250	265	0.68	78.5	H	.126	.139	1900	3800	354	60	82
DV112M6	3	2.2	1155	9.4	4.7	3.76	628	164	270	320	0.71	82.5	J	.233	.262	—	2600	487	84	110
DV132S6	4	3	1155	11.4	5.7	4.56	651	218	250	300	0.77	84	J	.416	.445	—	2000	664	106	139
DV132M6	5	3.7	1170	15.8	7.9	6.3	570	269	260	280	0.70	84	J	1.021	1.125	—	1600	885	146	198
DV132ML6	7.5	5.5	1160	21.8	10.9	8.7	570	407	240	250	0.73	84	H	1.243	1.348	—	1100	1328	165	220
DV160M6	10	7.5	1160	28.6	14.3	11.4	560	543	240	260	0.75	85.5	H	1.545	1.648	—	800	1328	185	240
DV160L6	15	11	1150	39	19.5	15.6	590	822	220	270	0.83	85.5	G	3.182	3.420	—	550	1770	340	432
DV180L6	20	15	1160	58	29	23.2	721	1087	280	300	0.77	82.5	K	4.774	5.011 5.263[1]	—	420	2655 2655[1]	423	514 522[1]
DV200LS6	25	18.5	1175	64	32	25.6	563	1341	290	200	0.82	90.2	G	7.101	7.339 7.590[1]	—	350	2655 5310[1]	485	597 606[1]
DV200L6	30	22	1175	76	38	30.4	571	1609	320	210	0.81	91	G	8.289	8.538 8.790[1]	—	300	2655 5310[1]	538	650 659[1]

***Without Brake**
****With Brake**
[1]Double Disc Brake
[2]Values with BG rectifier (standard for frame size 100L and smaller)
[3]Values with BGE rectifier (standard for frame size 112M and larger)
[4]To assure a long life of the brake lining do not mechanically brake at speeds above 1800 rpm.
The motor must be dynamically braked from 2 pole to 4 pole speed.

آتور صنعت
ATOORSANAT

Abbreviations	
P_n	Rated Power
n_n	Full Load Speed
I_n	Full Load Current
I_a / I_n	Starting Current Ratio (Locked Rotor)
T_n	Full Load Torque
T_a / T_n	Starting Torque Ratio

Abbreviations	
T_k / T_n	Breakdown Torque Ratio
Cos φ	Power Factor
η	Motor Efficiency
J_m	Motor Inertia
Z_0	Permissible no-load frequency at 50% ED
T_B	Maximum Brake Torque

آتور صنعت ATOORSANAT SEW EURODRIVE

4.Synchronous Speed 1800/3600 rpm @ 60Hz

- Tapped Wound, Continuous Duty - 40°C Ambient - rpm to 3300 ft Elevation

Frame Size	P_n		n_n	I_n Amp			I_a/I_n	T_n	T_a/T_n	T_k/T_n	Cos	η	Code	J_m lb-ft²		Z_o Starts/Hr.		T_B	Weight lbs.	
	hp	kW	rpm	230V	460V	575V	%	lb-in.	%	%	φ	%	Letter	*	**	BG[2]	BGE[3]	lb-in.	*	**
DT71K4/2	0.20	0.15	1700	1.49	0.75	0.60	240	7.45	160	165	0.76	33	E	.00616	.00836	4100	5600	22	13	19
	0.27	0.20	3200	1.32	0.66	0.53	240	5.30	160	170	0.85	45				1700	2200			
DT71C4/2	0.27	0.20	1700	1.37	0.69	0.55	320	9.94	150	200	0.74	49	F	.0104	.0125	4100	5600	44	15	22
	0.38	0.28	3320	1.40	0.70	0.56	370	7.13	150	190	0.90	56				1700	2200			
DT71D4/2	0.34	0.25	1700	1.80	0.90	0.72	270	12.4	150	180	0.71	49	D	.0109	.0130	3800	5200	44	15	22
	0.50	0.37	3320	1.75	0.88	0.70	300	9.42	160	170	0.88	60				1600	1900			
DT80K4/2	0.55	0.40	1680	2.15	1.08	0.86	300	20.1	160	190	0.75	62	D	.0156	.0177	2400	3800	88	22	28
	0.85	0.63	3300	2.65	1.33	1.06	350	16.1	150	160	0.93	64				1400	1500			
DT80N4/2	0.75	0.55	1680	3.15	1.58	1.26	320	28	180	190	0.71	62	D	.0207	.0228	2000	3500	88	25	32
	1.20	0.88	3300	3.55	1.78	1.42	360	23	170	160	0.91	68				1400	1500			
DT90S4/2	1.2	0.88	1720	4.3	2.15	1.72	430	43	190	230	0.76	68	F	.0594	.0722	1800	3100	177	35	57
	1.7	1.30	3350	5.8	2.90	2.30	370	33	160	190	0.85	66				800	1400			
DT90L4/2	1.5	1.1	1730	5.1	2.55	2.05	480	54	230	340	0.75	72	E	.0808	.0936	1600	2800	177	40	62
	2.5	1.8	3380	7.4	3.70	2.95	400	45	200	270	0.90	68				700	980			
DT100LS4/2	2	1.5	1730	6.1	3.05	2.45	530	73	230	260	0.77	80	F	.101	.114	800	2400	354	51	73
	3	2.2	3410	7.9	3.95	3.15	500	55	220	230	0.90	78				500	630			
DT100L4/2	3.4	2.5	1710	9.7	4.85	3.90	500	124	220	230	0.82	79	H	.126	.139	800	1650	354	60	82
	4	3.0	3440	10.9	5.50	4.36	600	74	250	270	0.88	79				550	600			
DV112M4/2	4.5	3.3	1720	12.5	6.3	5.0	500	162	180	220	0.82	81	F	.233	.262	—	1200	487	84	110
	5.5	4.0	3460	15.1	7.6	6.0	500	98	210	240	0.83	80					490			
DV132S4/2	6	4.4	1720	15.5	7.8	6.2	500	216	210	220	0.85	84	E	.346	.375	—	700	664	105	139
	7.5	5.5	3460	20.5	10.3	8.2	440	134	240	230	0.85	79					350			
DV132M4/2[4]	8	6.0	1750	20.5	10.3	8.2	690	290	210	260	0.86	85	J	.665	.769	—	800	885	146	198
	10	7.5	3500	27	13.5	10.8	690	181	190	280	0.86	81					300			
DV132ML4/2[4]	10	7.5	1750	26	13.0	10.4	700	362	230	300	0.85	81	H	.784	.888	—	750	1328	165	220
	13.5	10	3500	35.5	17.8	14.2	660	241	210	320	0.86	82					250			
DV160L4/2[4]	18	13.5	1760	48.5	24.5	19.5	560	648	250	280	0.80	87	H	2.197	2.449	—	700	1770	326	419
	20	15	3520	53.0	26.5	21.0	630	360	250	250	0.87	82					170			
DV180M4/2[4]	22	16	1760	56	28	22.5	570	768	260	220	0.80	90	H	2.660	2.912	—	600	2655	385	476
	25	18.5	3520	63	31.5	25	650	444	250	270	0.87	85			3.164[1]		120	2655[1]		485[1]
DV180L4/2[4]	25	18.5	1760	66	33	26.5	620	888	270	260	0.80	88	J	3.064	3.316	—	550	2655	410	503
	30	23	3530	76	38	30.5	720	550	260	280	0.88	86			3.567[1]		100	2655[1]		512[1]
DV200L4/2[4]	35	26	1770	83	41.5	33	730	1241	340	280	0.87	90	H	5.558	5.809	—	250	2655	538	650
	45	33	3540	109	55	43.5	730	788	300	310	0.91	84			6.061[1]		50	5310[1]		659[1]
DV225S4/2[4]	40	30	1770	98	49	39	680	1432	300	300	0.86	89	K	7.149	7.400	—	180	2655	653	765
	50	38	3550	127	64	51	820	904	300	300	0.90	83			7.652[1]		35	5310[1]		774[1]
DV225M4/2[4]	45	35	1775	111	56	44.5	680	1600	320	250	0.86	92	K	8.479	8.730	—	120	2655	717	831
	60	45	3550	146	73	58	830	1070	320	280	0.90	86			8.982[1]		30	5310[1]		840[1]

***Without Brake**
**** With Brake**
[1] **Double Disc Brake**
[2] **Values with BG rectifier (standard for frame size 100L and smaller)**
[3] **Values with BGE rectifier (standard for frame size 112M and larger)**
[4] **To assure a long life of the brake lining do not mechanically brake at speeds above 1800 rpm. The motor must be dynamically braked from 2 pole to 4 pole speed.**

Abbreviations	
P_n	Rated Power
n_n	Full Load Speed
I_n	Full Load Current
I_a / I_n	Starting Current Ratio (Locked Rotor)
T_n	Full Load Torque
T_a / T_n	Starting Torque Ratio

Abbreviations	
T_k / T_n	Breakdown Torque Ratio
Cos φ	Power Factor
η	Motor Efficiency
J_m	Motor Inertia
Z_0	Permissible no-load frequency at 50% ED
T_B	Maximum Brake Torque

5.Synchronous Speed 900/1800 rpm @ 60Hz

- Tapped Wound, Continuous Duty - 40°C Ambient - up to 3300 ft Elevation

Frame Size	P_n		n_n	I_n Amp			I_a/I_n	T_n	T_a/T_n	T_k/T_n	Cos	η	Code	J_m lb-ft²		Z_o Starts/Hr.		T_B	Weight lbs.	
	hp	kW	rpm	230V	460V	575V	%	lb-in.	%	%	φ	%	Letter	*	**	BG[2]	BGE[3]	lb-in.	*	**
DT71D8/4	0.14	0.10	800	0.86	0.43	0.34	220	10.6	170	200	0.70	42	F	.0156	.0177	5600	8400	44	16	24
	0.24	0.18	1680	0.94	0.47	0.38	330	9.05	150	180	0.85	57				3200	4900			
DT80K8/4	0.22	0.16	800	1.32	0.66	0.53	190	16.9	150	150	0.68	45	E	.0245	.0266	4800	7700	88	22	30
	0.40	0.30	1680	1.50	0.75	0.60	300	15.1	150	170	0.83	60				2800	4200			
DT80N8/4	0.3	0.22	820	1.77	0.89	0.71	210	22.7	170	180	0.66	47	F	.0335	.0356	4400	7000	88	25	33
	0.5	0.40	1700	1.98	0.99	0.79	350	19.9	160	180	0.83	61				2700	4200			
DT90S8/4	0.4	0.3	850	2.95	1.48	1.18	250	30	200	210	0.58	44	H	.0594	.0722	2800	6300	177	35	55
	0.8	0.6	1700	2.95	1.48	1.18	430	30	180	220	0.84	61				2200	3500			
DT90L8/4	0.6	0.44	850	3.65	1.83	1.46	210	44	190	230	0.56	54	F	.0808	.0936	2500	5000	177	40	60
	1.2	0.88	1700	3.80	1.90	1.52	420	44	170	220	0.84	69				2000	3000			
DT100LS8/4	0.9	0.66	830	4.65	2.35	1.86	260	67	180	170	0.60	60	E	.101	.114	2000	3900	354	51	75
	1.8	1.30	1700	5.30	2.65	2.10	400	65	170	170	0.85	72				1600	2500			
DT100L8/4	1.2	0.9	830	6.3	3.15	2.5	270	92	150	190	0.60	60	E	.126	.139	2000	3500	354	57	82
	2.4	1.8	1700	6.8	3.40	2.7	400	89	160	180	0.88	76				1200	1900			
DV112M8/4	1.6	1.2	850	7.4	3.70	2.95	340	119	190	230	0.58	70	H	.233	.262	—	2800	487	79	101
	3.0	2.2	1740	8.3	4.15	3.30	580	107	190	220	0.86	77					1400			
DV132S8/4	2.4	1.8	850	12.5	6.3	5.00	370	179	230	260	0.57	63	H	.346	.375	—	2100	664	99	121
	4.5	3.3	1740	12.3	6.2	4.90	630	160	210	270	0.86	78					1050			
DV132M8/4	3	2.2	870	12.2	6.1	4.90	390	219	220	250	0.60	75	G	.665	.769	—	2100	885	146	198
	6	4.4	1750	15.5	7.8	6.2	570	217	220	240	0.88	81					1000			
DV132ML8/4	3.5	2.7	870	14.4	7.2	5.8	360	268	230	250	0.62	76	F	.784	.888	—	1900	1328	165	212
	7.5	5.5	1750	19.0	9.5	7.6	530	273	240	240	0.84	87					980			
DV160M8/4	5	3.8	870	20.5	10.3	8.2	380	369	280	260	0.60	78	G	.945	1.049	—	1400	1328	187	234
	10	7.5	1760	25.5	12.8	10.2	600	360	280	260	0.85	87					960			
DV160L8/4	7.5	5.5	870	31.5	15.7	12.6	310	534	170	170	0.55	80	G	2.197	2.449	—	1100	1770	317	397
	13.5	10	1760	35.0	17.3	13.9	570	480	230	230	0.83	86					840			
DV180L8/4	10	7.5	870	45.5	23.0	18.2	350	720	250	190	0.51	81	H	3.064	3.316	—	750	2655	401	481
	20	15	1760	53.0	27.3	21.8	600	716	250	220	0.81	88			3.567[1]		650	2655[1]		489[1]
DV200LS8/4	16	12	870	48	24.0	19.1	380	1165	200	190	0.73	86	E	7.101	7.339	—	700	2655	489	582
	27	20	1750	63	31.5	25.0	500	966	200	200	0.90	89			7.590[1]		550	5310[1]		591[1]
DV200L8/4	19	14	870	56	28.0	22.5	400	1360	240	210	0.74	85	E	8.289	8.538	—	600	2655	511	604
	30	22	1750	70	35.0	28.0	550	1062	240	220	0.90	88			8790[1]		450	5310[1]		613[1]

*** Without Brake**
**** With Brake**
[1] Double Disc Brake
[2] Values with BG rectifier (standard for frame size 100L and smaller)
[3] Values with BGE rectifier (standard for frame size 112M and larger)

Abbreviations	
P_n	Rated Power
n_n	Full Load Speed
I_n	Full Load Current
I_a / I_n	Starting Current Ratio (Locked Rotor)
T_n	Full Load Torque
T_a / T_n	Starting Torque Ratio

Abbreviations	
T_k / T_n	Breakdown Torque Ratio
Cos φ	Power Factor
η	Motor Efficiency
J_m	Motor Inertia
Z_0	Permissible no-load frequency at 50% ED
T_B	Maximum Brake Torque

آتور صنعت ATOORSANAT SEW EURODRIVE

6. Synchronous Speed 1200/3600 rpm @ 60Hz

- Separately Wound, S3-40/60% ED - 40°C Ambient - up to 3300 ft Elevation

Frame Size	P_n		n_n	I_n Amp			I_a/I_n	T_n	T_a/T_n	T_k/T_n	Cos	η	Code	J_m lb-ft²		Z_o Starts/Hr.		T_B	Weight lbs.	
	hp	kW	rpm	230V	460V	575V	%	lb-in.	%	%	φ	%	Letter	*	**	BG[2]	BGE[3]	lb-in.	*	**
DT71D6/2	0.10	0.08	1090	0.74	0.37	0.30	200	6.2	150	170	0.70	39	F	.0109	.0130	7600	13000	22	16	24
	0.34	0.25	3330	1.44	0.72	0.58	300	6.3	230	220	0.82	53				4000	5000			
DT80K6/2	0.18	0.13	1090	1.16	0.58	0.46	200	10.1	150	170	0.66	43	G	.0156	.0177	7500	11000	44	23	28
	0.55	0.40	3380	2.30	1.15	0.93	370	10.0	260	250	0.76	57				3100	4000			
DT80N6/2	0.27	0.2	1090	1.62	0.81	0.65	200	15.5	150	160	0.68	46	H	.0207	.0228	7000	9000	44	26	34
	0.80	0.6	3380	3.65	1.83	1.45	390	15.0	250	250	0.70	59				2400	3000			
SDT90S6/2[5]	0.4	0.3	1020	2.70	1.35	1.08	200	24.9	170	160	0.72	39	E	.0594	.0722	4600	5000	88	35	55
	1.2	0.9	3180	4.70	2.35	1.88	290	23.9	230	230	0.85	57				1300	1700			
SDT90L6/2[5]	0.55	0.4	1040	2.7	1.35	1.08	230	32.5	170	160	0.70	53	E	.0808	.0936	3500	3900	88	42	62
	1.80	1.3	3180	6.2	3.10	2.50	350	34.5	230	230	0.87	60				1000	1300			
SDT100LS6/2[5]	0.8	0.6	1060	4.35	2.15	1.74	220	47.8	180	170	0.66	52	E	.101	.114	3000	3500	177	51	71
	2.5	1.8	3240	8.5	4.25	3.40	350	47.0	240	240	0.84	63				900	1200			
SDT100L6/2[5]	1.1	0.8	1050	4.8	2.4	1.92	250	64.0	170	160	0.66	63	D	.126	.139	2700	3300	177	57	77
	3.3	2.4	3250	9.6	4.8	3.85	380	62.4	250	250	0.85	74				800	1000			
SDV112M6/2[5]	1.4	1.0	1110	6.3	3.15	2.50	280	76	170	160	0.65	61	E	.233	.262	—	2700	266	79	101
	4.0	3.0	3300	11.7	5.8	4.70	410	77	230	240	0.87	74					850			
SDV132S6/2[5]	1.8	1.3	1120	8.60	4.30	3.45	280	98	180	210	0.60	63	E	.346	.375	—	2000	327	99	121
	5.5	4.0	3300	15.0	7.50	6.00	440	102	220	220	0.90	80					700			
DV132M6/2[4]	2.2	1.6	1150	6.9	3.45	2.75	480	118	240	290	0.74	79	H	.665	.769	—	1800	442	143	196
	6.5	4.8	3470	17.3	8.7	6.9	530	117	270	290	0.88	79					350			
DV132ML6/2[4]	2.7	2.0	1150	9.0	4.50	3.6	480	147	230	240	0.72	77	G	.784	.888	—	1300	664	165	212
	8.0	6.0	3500	23	11.5	9.2	500	145	230	260	0.86	76					300			
DV160M6/2[4]	3.4	2.5	1150	11.1	5.6	4.45	500	184	250	300	0.72	79	H	.945	1.049	—	1000	664	187	234
	10	7.5	3500	26.5	13.3	10.6	600	181	230	240	0.90	79					240			
DV160L6/2[4]	5	3.7	1160	15.9	8.0	6.4	420	270	200	220	0.71	82	G	2.197	2.449	—	700	885	324	403
	15	11	3500	41.5	21.0	16.6	560	266	240	280	0.86	77					150			
DV180M6/2[4]	5.70	4.2	1160	18.2	9.1	7.3	450	306	210	230	0.75	77	H	2.660	2.912	—	600	1328	377	456
	16.5	13	3500	48.5	24.5	19.4	560	314	250	300	0.86	78			3.164[1]		120	1328[1]		465[1]
DV180L6/2[4]	7.5	5.5	1150	23	11.5	9.2	430	404	220	240	0.73	82	J	3.064	3.316	—	520	1328	419	498
	22	16	3500	58	29.0	23.0	700	386	300	330	0.86	81			3.567[1]		100	1328[1]		507[1]

* Without Brake
** With Brake
[1] Double Disc Brake
[2] Values with BG rectifier (standard for frame size 100L and smaller)
[3] Values with BGE rectifier (standard for frame size 112M and larger)
[4] To assure a long life of the brake lining do not mechanically brake at speeds above 1800 rpm. The motor must be dynamically braked to 1800 rpm.
[5] SDT; SDV Duty S3 40/100% ED

Abbreviations	
P_n	Rated Power
n_n	Full Load Speed
I_n	Full Load Current
I_a / I_n	Starting Current Ratio (Locked Rotor)
T_n	Full Load Torque
T_a / T_n	Starting Torque Ratio

Abbreviations	
T_k / T_n	Breakdown Torque Ratio
Cos φ	Power Factor
η	Motor Efficiency
J_m	Motor Inertia
Z_0	Permissible no-load frequency at 50% ED
T_B	Maximum Brake Torque

7.Synchronous Speed 900/3600 rpm @ 60Hz

- Separately Wound, S3-40/60% ED - 40°C Ambient - up to 3300 ft Elevation

Frame Size	P_n		n_n	I_n Amp			I_a/I_n	T_n	T_a/T_n	T_k/T_n	Cos	η	Code	J_m lb-ft²		Z_o Starts/Hr.		T_B	Weight lbs.	
	hp	kW	rpm	230V	460V	575V	%	lb-in.	%	%	φ	%	Letter	*	**	BG[2]	BGE[3]	lb-in.	*	**
DT71D8/2	0.08	0.06	825	0.78	0.39	0.31	160	6.1	140	160	0.78	25	F	.0109	.0130	14000	17000	22	16	24
	0.34	0.25	3270	1.22	0.61	0.49	360	6.5	200	200	0.89	58				4000	5000			
DT80K8/2	0.14	0.10	810	1.30	0.65	0.52	160	10.4	170	160	0.65	30	F	.0156	.0177	11000	14000	44	23	31
	0.55	0.40	3285	1.90	0.95	0.76	380	10.3	210	200	0.88	60				3100	4000			
DT80N8/2	0.2	0.15	810	1.75	0.88	0.70	160	15.7	180	150	0.60	36	E	.0207	.0228	10000	12000	44	26	34
	0.8	0.60	3310	2.45	1.23	0.98	370	15.3	210	210	0.89	69				2400	3000			
SDT90S8/2[5]	0.3	0.22	800	2.80	1.40	1.12	170	23.2	170	170	0.61	32	E	.0594	.0722	8000	10000	88	35	55
	1.2	0.90	3280	4.45	2.20	1.78	330	23.7	250	230	0.82	62				1300	1700			
SDT90L8/2[5]	0.4	0.3	780	3.05	1.52	1.22	200	32.5	170	180	0.64	39	F	.0808	.0936	6000	7600	88	40	60
	1.8	1.3	3280	5.80	2.90	2.30	420	33.5	270	250	0.87	65				1000	1300			
SDT100LS8/2[5]	0.6	0.45	780	4.15	2.10	1.66	200	48.8	170	180	0.62	44	E	.101	.114	5000	6000	177	51	71
	2.5	1.80	3280	7.30	3.65	2.90	400	46.4	240	220	0.89	70				900	1200			
SDT100L8/2[5]	0.8	0.6	780	5.3	2.65	2.10	200	65.0	180	180	0.60	47	E	.126	.139	3800	5000	177	57	77
	3.3	2.4	3300	9.2	4.60	3.70	450	61.5	260	240	0.90	73				800	1000			
SDV112M8/2[5]	1.1	0.8	830	6.3	3.15	2.50	220	81	140	180	0.55	58	E	.233	.262	—	4000	266	79	101
	4.0	3.0	3330	12.0	6.0	4.80	460	76	200	200	0.84	75					850			
SDV132S8/2[5]	1.4	1.0	840	9.1	4.55	3.65	260	101	140	180	0.54	51	E	.346	.375	—	3100	327	99	121
	5.5	4.0	3330	14.9	7.5	6.0	450	102	200	200	0.90	75					700			
DV132M8/2[4]	1.6	1.2	860	7.9	3.95	3.15	350	118	190	250	0.57	67	H	.665	.769	—	2600	442	143	196
	6.5	4.8	3470	17.4	8.7	7.00	630	117	270	270	0.88	79					350			
DV132ML8/2[4]	2	1.5	860	9.6	4.8	3.85	330	147	200	200	0.57	69	G	.784	.888	—	2200	664	165	211
	8	6.0	3500	23	11.5	9.2	500	145	230	240	0.86	76					300			
DV160M8/2[4]	2.6	1.9	860	12.3	6.2	4.9	350	187	180	230	0.56	69	F	.945	1.049	—	1700	664	187	234
	10	7.5	3500	26.5	13.3	10.6	520	181	200	300	0.85	84					240			
DV160L8/2[4]	3.8	2.8	860	17.4	8.7	7.0	340	275	220	220	0.55	73	G	2.197	2.449	—	1300	885	324	403
	15	11	3500	41.5	21	16.6	560	266	240	280	0.86	77					150			
DV180M8/2[4]	4.5	3.3	860	19.8	9.9	7.9	320	324	190	200	0.58	72	H	2.660	2.912	—	1000	1328	377	456
	16.5	13	3500	48.5	24.5	19.5	560	314	250	300	0.86	78			3.164[1]		120	1328[1]		485[1]
DV180L8/2[4]	5.5	4	860	26.5	13.3	10.6	320	393	210	230	0.58	65	J	3.064	3.316	—	900	1328	401	480
	22	16	3500	58.0	29.0	23.0	700	386	300	330	0.88	81			3.567[1]		100	1328[1]		489[1]
DV200L8/2[4]	6.8	5	880	27.5	13.8	11	400	480	300	300	0.57	80	K	5.558	5.809	—	310	1328	551	644
	27	20	3530	73	36.5	29	750	479	350	360	0.86	80			6.061[1]		70	2655[1]		653[1]
DV225S8/2[4] [6]	8	6	880	33	16.5	13.2	420	576	330	330	0.56	82	K	7.149	7.400	—	200	1328	657	750
	33	24	3530	83	41.5	33.0	800	575	330	340	0.90	81			7.652[1]		40	2655[1]		758[1]
DV225M8/2[4] [6]	10	7.5	880	41.5	21	16.6	460	720	330	330	0.56	81	M	8.479	8.730	—	200	1328	703	796
	40	30	3540	106	53	42.5	950	716	350	360	0.90	80			8.982[1]		40	2655[1]		805[1]

***Without Brake**
****With Brake**
[1] **Double Disc Brake**
[2] **With rectifer BG (standard for frame size 100L and smaller)**
[3] **With rectifer BGE (standard for frame size 112M and larger)**
[4] **To assure a long life of the brake lining do not mechanically brake at speeds above 1800 rpm. The motor must be dynamically braked to 1800 rpm.**
[5] **SDT; SDV Duty S3 40/100% ED**
[6] **Only available in STAR/DELTA**

Abbreviations	
P_n	Rated Power
n_n	Full Load Speed
I_n	Full Load Current
I_a / I_n	Starting Current Ratio (Locked Rotor)
T_n	Full Load Torque
T_a / T_n	Starting Torque Ratio

Abbreviations	
T_k / T_n	Breakdown Torque Ratio
Cos φ	Power Factor
η	Motor Efficiency
J_m	Motor Inertia
Z_0	Permissible no-load frequency at 50% ED
T_B	Maximum Brake Torque

آتور صنعت ATOORSANAT SEW EURODRIVE

Notes

آتور صنعت
ATOORSANAT

1. Foot Mounted DT/DV Motors and Brakemotors

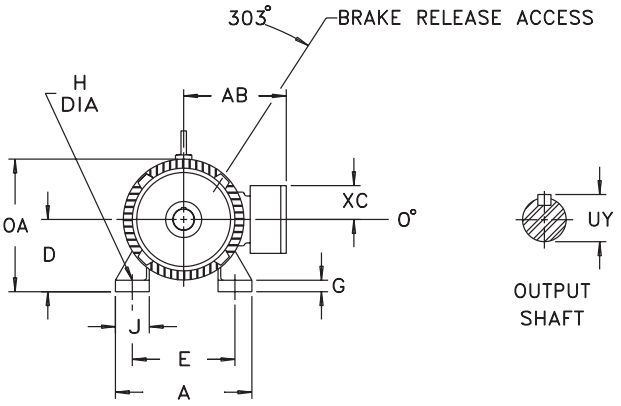

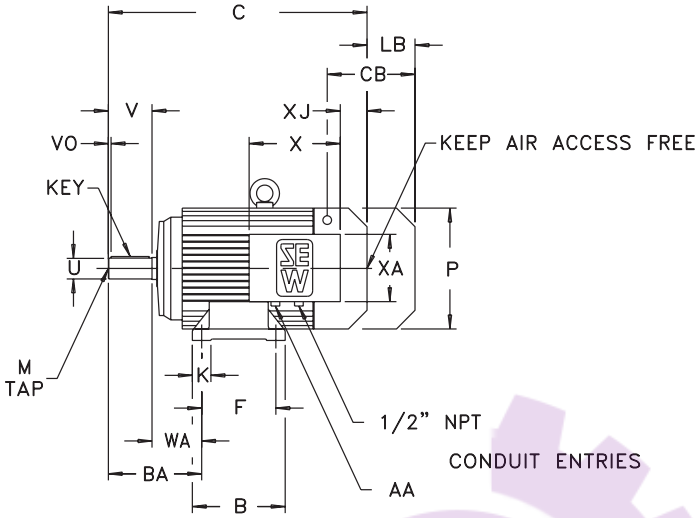

Dimensions are inch / mm

Model	Motor															
	A	B	BA	C	CB	D*	E	F	G	H	J	K	LB	OA	P	WA
DT71	5.67 144	4.53 115	2.95 75	9.13 232	2.32 59	2.80 71	4.41 112	3.54 90	0.20 5	0.28 7	1.22 31	1.26 32	2.52 64	5.67 144	5.71[1)] 145[1)]	1.77 45
DT80	5.87 149	4.92 125	3.54 90	11.50 292	2.32 59	3.15 80	4.92 125	3.94 100	0.39 10	0.35 9	1.30 33	1.10 28	2.52 64	6.02 153	5.71 145	1.97 50
DT90	6.93 176	5.98 152	4.17 106	12.72 323	2.72 69	3.54 90	5.51 140	4.92[2)] 125[2)]	0.31 8	0.35 9	1.26 32	1.26 32	3.35 85	7.44 189	7.76[1)] 197[1)]	2.20 56

Model	Output Shaft						Conduit Box					
	U*	UY	V	VO	Key	M	AA	AB	X	XA	XC	XJ
DT71	0.551 14	0.63 16	1.18 30	0.16 4	.20 x .20 x .87 5 x 5 x 22	M5 x .49 M5 x 12.5	½ NPT —	5.43 138	5.79 147	4.53 115	2.24 57	0.55 14
DT80	0.748 19	0.85 21.5	1.57 40	0.16 4	.24 x .24 x 1.26 6 x 6 x 32	M6 x .63 M6 x 16	½ NPT —	5.43 138	5.79 147	4.53 115	2.24 57	0.55 14
DT90	0.945 24	1.06 27	1.97 50	0.20 5	.31 x .28 x 1.57 8 x 7 x 40	M8 x .75 M8 x 19	½ NPT —	6.73 171	5.79 147	4.53 115	2.24 57	1.10 28

[1)] Fan Guard flattened at base.
[2)] Not per IEC for DT90S motors.

Dimension LB is for brake option.
Dimension CB is for brake release access.
Eye bolts are removable.

*** Note: See page 18 for tolerances.**

Dimensions subject to change without notice.

آتور صنعت ATOORSANAT
SEW EURODRIVE

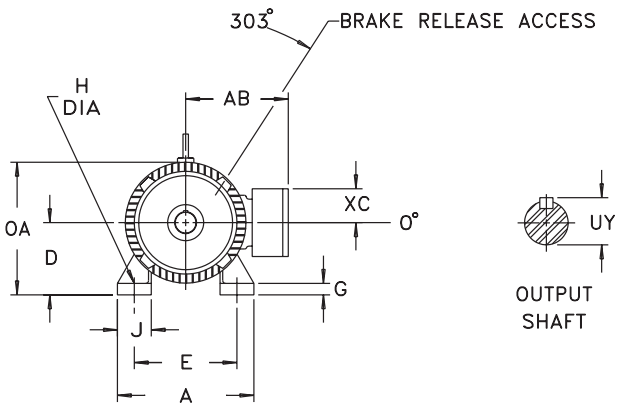

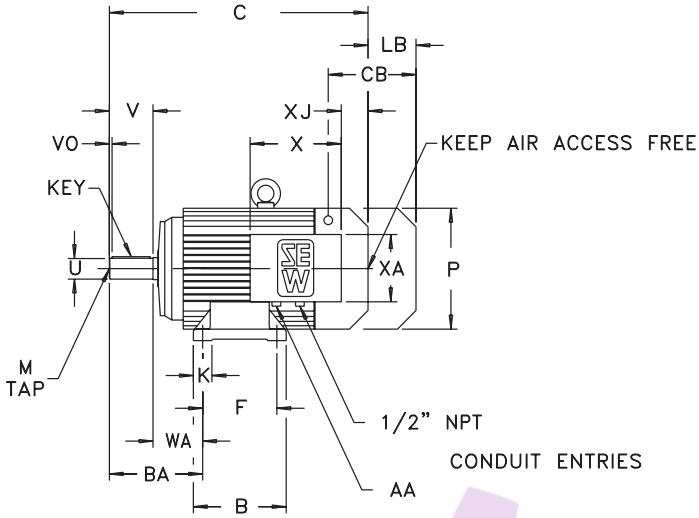

Dimensions are inch / mm

Model	Motor A	B	BA	C	CB	D*	E	F	G	H	J	K	LB	OA	P	WA
DT100	7.40 188	6.69 170	4.84 123	14.61 371	2.72 69	3.94 100	6.30 160	5.51 140	0.47 12	0.47 12	1.50 38	1.38 35	3.35 85	7.83 199	7.76 197	2.48 63
DV112M	8.66 220	6.69 170	5.12 130	16.10 409	3.82 97	4.41 112	7.48 190	5.51 140	0.55 14	0.47 12	1.73 44	1.38 35	3.15 80	8.78 223	8.70 221	2.76 70
DV132S	9.84 250	6.69 170	6.65 169	18.66 474	3.82 97	5.20 132	8.50 216	5.51 140	0.83 21	0.47 12	2.44 62	1.38 35	3.15 80	9.57 243	8.70 221	3.50 89
DV132M	10.20 259	8.58 218	6.65 169	18.98 482	4.41 112	5.20 132	8.50 216	7.01 178	0.67 17	0.51 13	2.60 66	1.77 45	4.41 112	10.63 270	10.83[1)] 275[1)]	3.50 89
DV132ML[3)]	11.38 289	9.92 252	7.40 188	21.34 542	4.41 112	6.30 160	10.00 254	8.27 210	0.98 25	0.59 15	3.23 82	1.97 50	4.41 112	11.73 298	10.83 275	4.25 108

Model	Output Shaft U*	UY	V	VO	Key	M	Conduit Box AA	AB	X	XA	XC	XJ
DT100	1.102 28	1.22 31	2.36 60	0.20 5	.31 x .28 x 1.97 8 x 7 x 50	M10 x .87 M10 x 22	¾ *NPT* —	6.89 175	6.57 167	4.84 123	2.40 61	1.22 31
DV112M	1.102 28	1.22 31	2.36 60	0.20 5	.31 x .28 x 1.97 8 x 7 x 50	M10 x .87 M10 x 22	¾ *NPT* —	7.40 188	6.57 167	4.84 123	2.40 61	1.85 47
DV132S	1.496 38	1.61 41	3.15 80	0.20 5	.39 x .31 x 2.76 10 x 8 x 70	M12 x 1.10 M12 x 28	¾ *NPT* —	7.40 188	6.57 167	4.84 123	2.40 61	1.85 47
DV132M	1.496 38	1.61 41	3.15 80	0.20 5	.39 x .31 x 2.76 10 x 8 x 70	M12 x 1.10 M12 x 28	1¼ *NPT* —	9.13 232	7.52 191	6.34 161	3.15 80	2.17 55
DV132ML	1.496 38	1.61 41	3.15 80	0.20 5	.39 x .31 x 2.76 10 x 8 x 70	M12 x 1.10 M12 x 28	1¼ *NPT* —	9.13 232	7.52 191	6.34 161	3.15 80	2.17 55

[1)] Fan Guard flattened at base.
[2)] Not per IEC for DT90S motors.

Dimension LB is for brake option.
Dimension CB is for brake release access.
Eye bolts are removable.

*** Note: See page 18 for tolerances.**

Dimensions subject to change without notice.

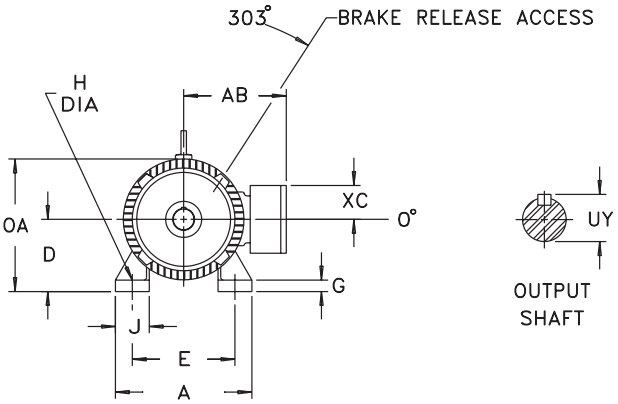

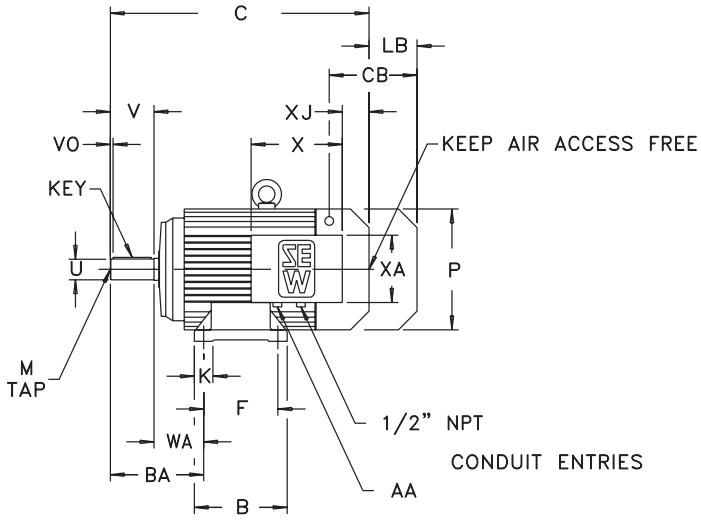

Dimensions are inch / mm

Model	A	B	BA	C	CB	D*	E	F	G	H	J	K	LB	OA	P	WA
	Motor															
DV160M	11.38 289	9.92 252	8.58 218	22.52 572	4.41 112	6.30 160	10.00 254	8.27 210	0.98 25	0.59 15	3.23 82	1.97 50	4.41 112	11.73 298	10.83 275	4.25 108
DV160L	12.13 308	11.57 294	8.58 218	24.13 613	6.30 160	6.30 160	10.00 254	10.00 254	0.75 19	0.55 14	2.95 75	2.56 65	6.14 156	12.83 326	13.03[1)] 331[1)]	4.25 108
DV180	12.60 320	12.56 319	9.09 231	26.97 685	6.30[2)] 160[2)]	7.09 180	10.98 279	10.98[4)] 279[4)]	1.30 33	0.59 15	3.23 82	2.56 65	6.14 156	13.62 346	13.03 331	4.76 121
DV200	14.88 378	13.98 355	9.57 243	28.58 726	6.77[3)] 172[3)]	7.87 200	12.52 318	12.01 305	1.10 28	0.75 19	3.74 95	2.95 75	6.14 156	15.63 397	15.51 394	5.24 133
DV225	16.30 414	14.61 371	11.38 289	32.68 830	6.77[3)] 172[3)]	8.86 225	14.02 356	12.24[4)] 311[4)]	1.57 40	0.75 19	4.53 115	2.76 70	6.14 156	16.61 422	15.51 394	5.87 149

Model	U*	UY	V	VO	Key	M	AA	AB	X	XA	XC	XJ
	Output Shaft						Conduit Box					
DV160M	1.654 42	1.77 45	4.33 110	0.39 10	.47 x .31 x 2.76 12 x 8 x 70	M16 x 1.42 M16 x 36	1¼ *NPT* —	9.13 232	7.52 191	6.34 161	3.15 80	2.32 59
DV160L	1.654 42	1.77 45	4.33 110	0.39 10	.47 x .31 x 2.76 12 x 8 x 70	M16 x 1.42 M16 x 36	2 × 1½ *NPT* —	10.04 255	8.86 225	9.06 230	3.66 93	5.98 152
DV180	1.890 48	2.03 51.5	4.33 110	0.39 10	.55 x .35 x 3.15 14 x 9 x 80	M20 x 1.65 M20 x 42	2 × 1½ *NPT* —	10.55 268	8.86 225	9.06 230	3.66 993	7.40 188
DV200	2.165 55	2.32 59	4.33 110	0.39 10	.63 x .39 x 3.54 16 x 10 x 90	M20 x 1.65 M20 x 42	2 × 1½ *NPT* —	11.81 300	8.86 225	9.06 230	3.66 93	9.29 236
DV225	2.362 60	2.52 64	5.51 140	0.59 15	.71 x .43 x 3.94 18 x 11 x 100	M20 x 1.65 M20 x 42	2 × 1½ *NPT* —	11.97 304	8.86 225	9.06 230	3.66 93	10.94 278

[1)] Fan Guard flattened at base.

[2)] CB = $\frac{5.24}{133}$ for double disc brake.

[3)] CB = $\frac{5.63}{143}$ for double disc brake.

[4)] Not per IEC for DV180M and DV225S motors.
Dimension LB is for brake option.
Dimension CB is for brake release access.
Eye bolts are removable.

*** Note: See page 18 for tolerances.**

Dimensions subject to change without notice.

آتور صنعت ATOORSANAT
SEW EURODRIVE

2. Flange Mounted DFT/DFV Motors and Brakemotors

FIG. I

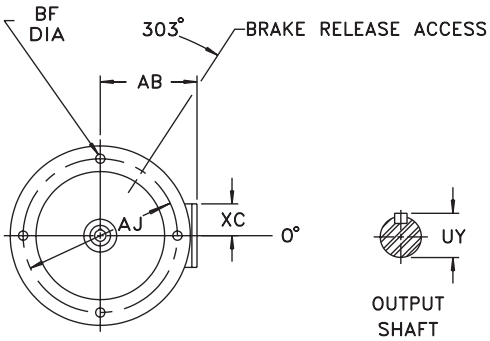

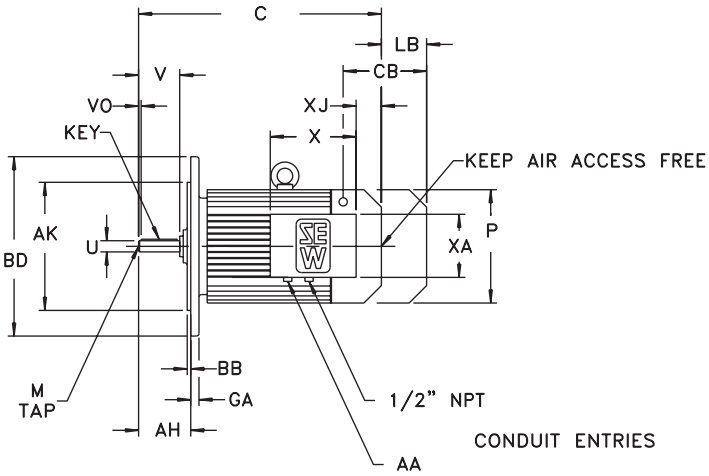

FIG. II

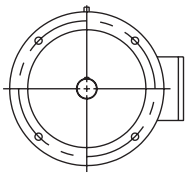

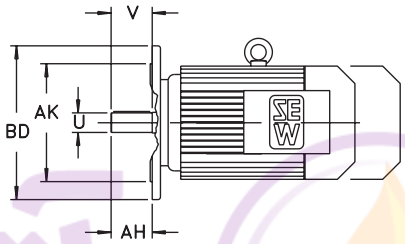

Dimensions are inch / mm

Model	Motor				Output Shaft					
	C	CB	LB	P	U*	UY	V	VO	Key	M
DFT71	9.13 232	2.32 59	2.52 64	5.71 145	0.551 14	0.63 16	1.18 30	0.16 4	.20 x .20 x .87 5 x 5 x 22	M5 x .49 M5 x 12.5
DFT80	11.50 292	2.32 59	2.52 64	5.71 145	0.748 19	0.85 21.5	1.57 40	0.16 4	.24 x .24 x 1.26 6 x 6 x 32	M6 x .63 M6 x 16
DFT90	12.72 323	2.72 69	3.35 85	7.76 197	0.945 24	1.06 27	1.97 50	0.20 5	.31 x .28 x 1.57 8 x 7 x 40	M8 x .75 M8 x 19

Conduit Box							IEC Flange							
Model	AA	AB	X	XA	XC	XJ	FIG.	AH	AJ	AK*	BB	BD	BF	GA
DFT71	½ NPT —	5.43 138	5.79 147	4.53 115	2.24 57	0.55 14	II	1.18 30	5.12 130	4.331 110	0.14 3.5	6.30 160	0.35 9	0.39 10
DFT80	½ NPT —	5.43 138	5.79 147	4.53 115	2.24 57	0.55 14	II	1.57 40	6.50 165	5.118 130	0.14 3.5	7.87 200	0.43 11	0.47 12
DFT90	½ NPT —	6.73 171	5.79 147	4.53 115	2.24 57	1.10 28	II	1.97 50	6.50 165	5.118 130	0.14 3.5	7.87 200	0.43 11	0.47 12

Optional Flanges								
Model	FIG.	AH	AJ	AK*	BB	BD	BF	GA
DFT71	II	1.18 30	6.50 165	5.118 130	0.14 3.5	7.87 200	0.43 11	0.47 12
DFT80	II	1.57 40	5.12 130	4.331 110	0.14 3.5	6.30 160	0.35 9	0.39 10
DFT90	I	2.60 66	8.46 215	7.087 180	0.16 4	9.84 250	0.55 14	0.59 15

Dimension LB is for brake option.
Dimension CB is for brake release access.
Eye bolts are removable.
*** Note: See page 18 for tolerances.**

ATOORSANAT آتور صنعت

FIG. I

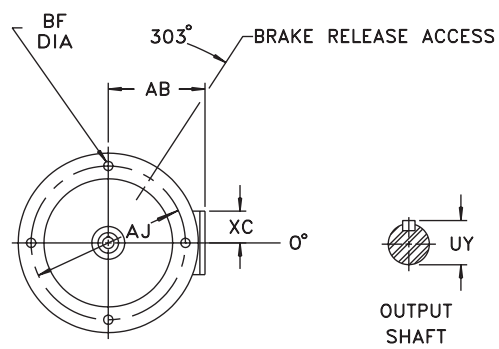

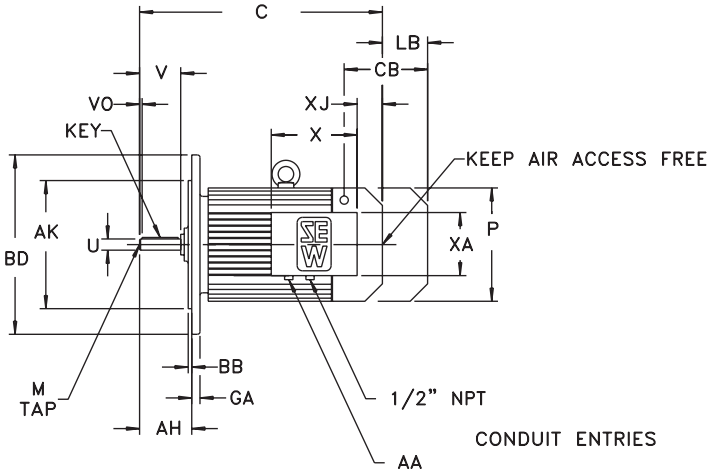

FIG. II

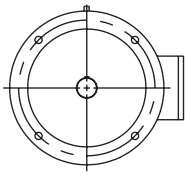

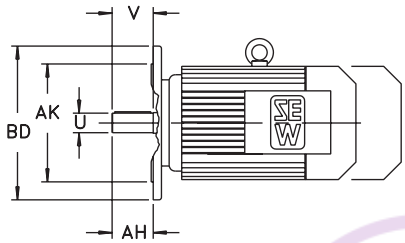

Dimensions are $\frac{\text{inch}}{mm}$

Model	Motor				Output Shaft					
	C	CB	LB	P	U	UY	V	VO	Key	M
DFT100	14.61 371	2.72 69	3.35 85	7.76 197	1.102 28	1.22 31	2.36 60	0.20 5	.31 x .28 x 1.97 8 x 7 x 50	DM10 x .87 DM10 x 22
DFV112M	16.10 409	3.82 97	3.15 80	8.70 221	1.102 28	1.22 31	2.36 60	0.20 5	.31 x .28 x 1.97 8 x 7 x 50	DM10 x .87 DM10 x 22
DFV132S	18.66 474	3.82 97	3.15 80	8.70 221	1.496 38	1.61 41	3.15 80	0.20 5	.39 x .31 x 2.76 10 x 8 x 70	DM12 x 1.10 DM12 x 28

Model	Conduit Box					IEC Flange							
	AA	AB	X	XA	XC	XJ	FIG.	AH	AJ	AK	BB	BD	BF	GA
DFT100	¾ *NPT* —	6.89 175	6.57 167	4.84 123	2.40 61	1.22 31	II	2.36 60	8.46 215	7.087 180	0.16 4	9.84 250	0.55 14	0.59 15
DFV112M	¾ *NPT* —	7.40 188	6.57 167	4.84 123	2.40 61	1.85 47	II	2.36 60	8.46 215	7.087 180	0.16 4	9.84 250	0.55 14	0.59 15
DFV132S	¾ *NPT* —	7.40 188	6.57 167	4.84 123	2.40 61	1.85 47	II	3.15 80	10.43 265	9.055 230	0.16 4	11.81 300	0.55 14	0.63 16

Model	Optional Flanges							
	FIG.	AH	AJ	AK	BB	BD	BF	GA
DFT100	II	2.36 60	6.50 165	5.118 130	0.14 3.5	7.87 200	0.43 11	0.47 12
DFV112M	I	2.36 60	10.43 265	9.055 230	0.16 4	11.81 300	0.55 14	0.63 16
		2.50 63.5	6.50 165	5.118 130	0.14 3.5	7.87 200	0.43 11	0.43 11
DFV132S	I	3.92 99.5	11.81 300	9.843 250	0.20 5	13.78 350	0.71 18	0.71 18
	II	3.15 80	8.46 215	7.087 180	0.16 4	9.84 250	0.55 14	0.59 15

Dimension LB is for brake option.
Dimension CB is for brake release access.
Eye bolts are removable.
*** Note: See page 18 for tolerances.**

Dimensions subject to change without notice.

آتور صنعت ATOORSANAT
SEW EURODRIVE

3. Flange Mounted DFT/DFV Motors and Brakemotors

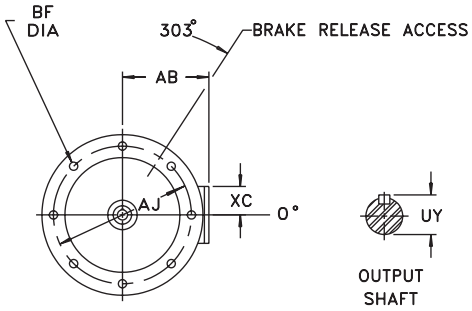

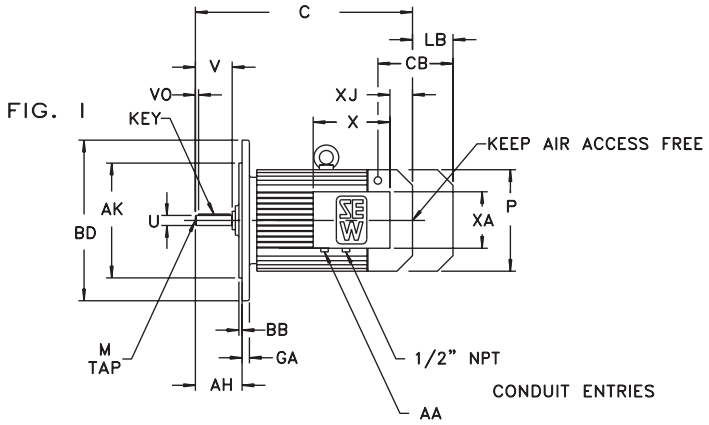

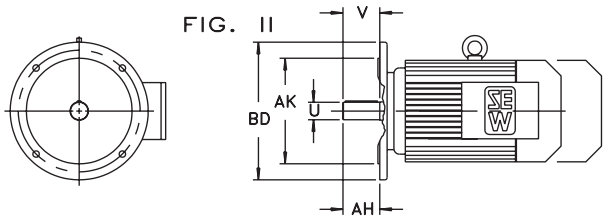

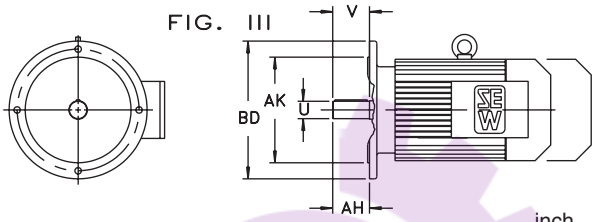

Dimensions are inch / mm

Model	Motor				Output Shaft					
	C	CB	LB	P	U*	UY	V	VO	Key	M
DFV132M	18.98 482	4.41 112	4.41 112	10.83 275	1.496 38	1.61 41	3.15 80	0.20 5	.39 x .31 x 2.76 10 x 8 x 70	M12 x 1.10 M12 x 28
DFV132ML	21.34 542	4.41 112	4.41 112	10.83 275	1.496 38	1.61 41	3.15 80	0.20 5	.39 x .31 x 2.76 10 x 8 x 70	M12 x 1.10 M12 x 28
DFV160M	22.52 572	4.41 112	4.41 112	10.83 275	1.654 42	1.77 45	4.33 110	0.39 10	.47 x .31 x 2.76 12 x 8 x 70	M16 x 1.42 M16 x 36

Model	Conduit Box						IEC Flange							
	AA	AB	X	XA	XC	XJ	FIG.	AH	AJ	AK*	BB	BD	BF	GA
DFV132M	1¼ NPT —	9.13 232	7.52 191	6.34 161	3.15 80	2.17 55	II	3.15 80	10.43 265	9.055 230	0.16 4	11.81 300	0.55 14	0.63 16
DFV132ML	1¼ NPT —	9.13 232	7.52 191	6.34 161	3.15 80	2.17 55	II	3.15 80	10.43 265	9.055 230	0.16 4	11.81 300	0.55 14	0.63 16
DFV160M	1¼ NPT —	9.13 232	7.52 191	6.34 161	3.15 80	2.32 59	II	4.33 110	11.81 300	9.843 250	0.20 5	13.78 350	0.71 18	0.71 18

Model	Optional Flanges							
	FIG.	AH	AJ	AK*	BB	BD	BF	GA
DFV132M	II	3.15 80	11.81 300	9.843 250	0.20 5	13.78 350	0.71 18	0.71 18
	III	2.95 75	8.46 215	7.087 180	0.16 4	9.84 250	0.55 14	0.59 15
DFV132ML	II	3.15 80	11.81 300	9.843 250	0.20 5	13.78 350	0.71 18	0.71 18
DFV160M	I	5.16 131	15.75 400	13.780 350	0.20 5	17.72 450	0.71 18	0.87 22
	II	4.33 110	10.43 265	9.055 230	0.16 4	11.81 300	0.55 14	0.63 16

Dimension LB is for brake option.
Dimension CB is for brake
Eye bolts are removable.
*** Note: See page 18 for tolerances.**

Dimensions subject to change without notice.

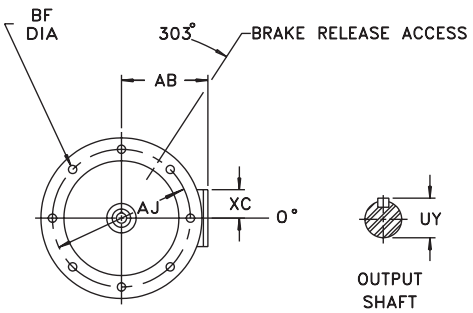

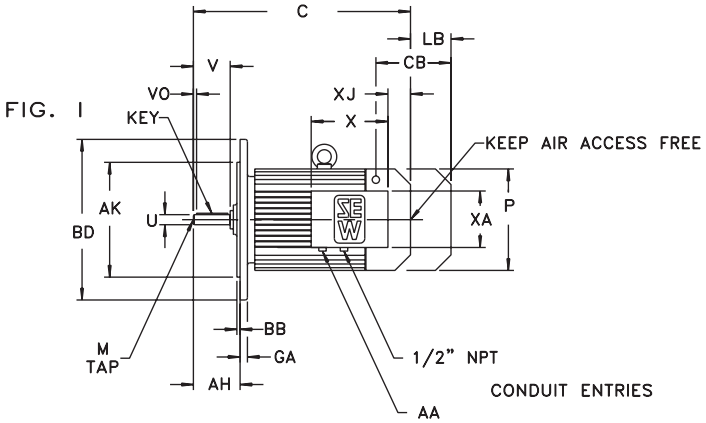

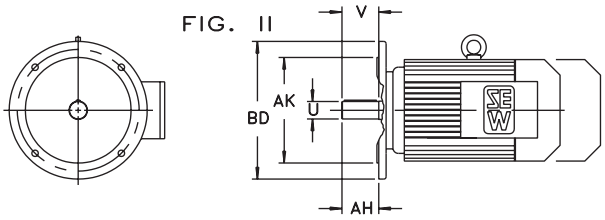

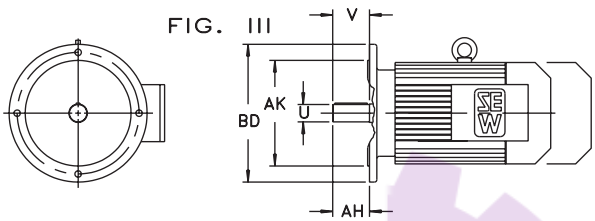

Dimensions are $\frac{\text{inch}}{mm}$

Model	Motor				Output Shaft					
	C	CB	LB	P	U	UY	V	VO	Key	M
DFV160L	24.13 613	6.30 160	6.14 156	13.03 331	1.654 42	1.77 45	4.33 110	0.39 10	.47 x .31 x 2.76 12 x 8 x 70	M16 x 1.42 M16 x 36
DFV180	26.97 685	6.30[1)] 160[1)]	6.14 156	13.03 331	1.890 48	2.03 51.5	4.33 110	0.39 10	.55 x .35 x 3.15 14 x 9 x 80	M20 x 1.65 M20 x 42
DFV200	28.58 726	6.77[1)] 172[1)]	6.14 156	15.51 394	2.165 55	2.32 59	4.33 110	0.39 10	.63 x .39 x 3.54 16 x 10 x 90	M20 x 1.65 M20 x 42

Model	Conduit Box						IEC Flange							
	AA	AB	X	XA	XC	XJ	FIG.	AH	AJ	AK	BB	BD	BF	GA
DFV160L	2 × 1½ *NPT* —	10.04 255	8.86 225	9.06 230	3.66 93	5.98 152	II	4.33 110	11.81 300	9.843 250	0.20 5	13.78 350	0.71 18	0.71 18
DFV180	2 × 1½ *NPT* —	10.55 268	8.86 225	9.06 230	3.66 93	7.40 188	II	4.33 110	11.81 300	9.843 250	0.20 5	13.78 350	0.71 18	0.71 18
DFV200	2 × 1½ *NPT* —	11.81 300	8.86 225	9.06 230	3.66 93	9.29 236	II	4.33 110	13.78 350	11.811 300	0.20 5	15.75 400	0.71 18	0.79 20

Model	Optional Flanges							
	FIG.	AH	AJ	AK	BB	BD	BF	GA
DFV160L	I	4.92 125	15.75 400	13.780 350	0.20 5	17.72 450	0.71 18	0.87 22
	III	4.09 104	10.43 265	9.055 230	0.16 4	11.81 300	0.55 14	0.63 16
DFV180	I	4.92 125	15.75 400	13.780 350	0.20 5	17.72 450	0.71 18	0.87 22
	III	4.09 104	10.43 265	9.055 230	0.16 4	11.81 300	0.55 14	0.63 16
DFV200	I	4.65 118	15.75 400	13.780 350	0.20 5	17.72 450	0.71 18	0.87 22

[1)] **CB = $\frac{5.24}{133}$ for double disc brake.**

Dimension LB is for brake option.
Dimension CB is for brake
Eye bolts are removable.

*** Note: See page 18 for tolerances.**

Dimensions subject to change without notice.

آتور صنعت ATOORSANAT
SEW EURODRIVE

4. Flange Mounted DFT/DFV Motors and Brakemotors

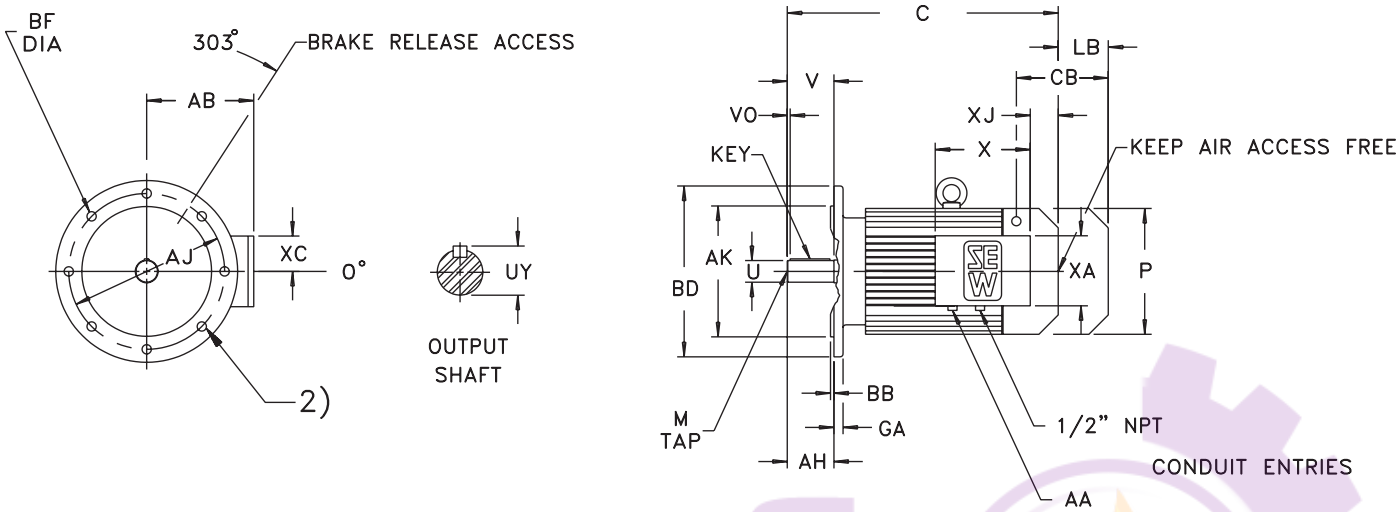

Dimensions are $\frac{\text{inch}}{mm}$

Model	Motor				Output Shaft					
	C	CB	LB	P	U	UY	V	VO	Key	M
DFV225	32.68 830	6.77[1)] 172[1)]	6.14 156	15.51 394	2.362 60	2.52 64	5.51 140	0.59 15	.71 x .43 x 3.94 18 x 11 x 100	M20 x 1.65 M20 x 42

Model	Conduit Box					
	AA	AB	X	XA	XC	XJ
DFV225	2 × 1½ *NPT* —	11.97 304	8.86 225	9.06 230	3.66 93	10.94 278

Model	IEC Flange [2)]						
	AH	AJ	AK	BB	BD	BF	GA
DFV225	5.51 140	15.75 400	13.780 350	0.20 5	17.72 450	0.71 18	0.87 22

[1)] **CB = $\frac{5.63}{143}$ for double disc brake.**

[2)] **Bolt pattern orientation deviates from IEC**
Dimension LB is for brake option.
Dimension CB is for brake
Eye bolts are removable.

*** Note: See page 18 for tolerances.**

Auxiliary Devices

5. Fan End Extended Shaft

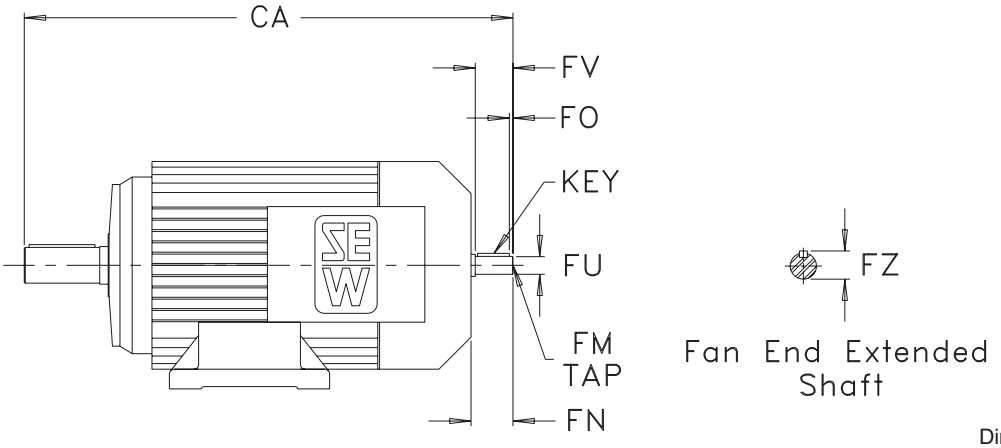

Dimensions are inch / mm

Model	Fan End Extended Shaft							
	CA	FN	FO	FU*	FV	FZ	Key	FM
DT/DFT71	10.08 256	0.94 24	0.04 1	0.433 11	0.91 23	0.49 12.5	.16 x .16 x .79 4 x 4 x 20	M4 x .39 M4 x 10
DT/DFT80	12.72 323	1.22 31	0.16 4	0.551 14	1.18 30	0.63 16	.20 x .20 x .87 5 x 5 x 22	M5 x .49 M5 x 12.5
DT/DFT90	14.37 365	1.65 42	0.16 4	0.748 19	1.57 40	0.85 21.5	.24 x .24 x 1.26 6 x 6 x 32	M6 x .63 M6 x 16
DT/DFT100	16.26 413	1.65 42	0.20 5	0.748 19	1.57 40	0.85 21.5	.24 x .24 x 1.26 6 x 6 x 32	M6 x .63 M6 x 16
DV/DFV112M	18.27 464	2.17 55	0.20 5	0.945 24	1.97 50	1.06 27	.31 x .28 x 1.57 8 x 7 x 40	M8 x .75 M8 x 19
DV/DFV132S	21.22 539	2.56 65	0.20 5	1.102 28	2.36 60	1.22 31	.31 x .28 x 1.97 8 x 7 x 50	M10 x .87 M10 x 22
DV/DFV132M	22.32 567	3.35 85	0.20 5	1.496 38	3.15 80	1.61 41	.39 x .31 x 2.76 10 x 8 x 70	M12 x 1.10 M12 x 28
DV/DFV132ML	24.69 627	3.35 85	0.20 5	1.496 38	3.15 80	1.61 41	.39 x .31 x 2.76 10 x 8 x 70	M12 x 1.10 M12 x 28
DV/DFV160M	25.87 657	3.35 85	0.20 5	1.496 38	3.15 80	1.61 41	.39 x .31 x 2.76 10 x 8 x 70	M12 x 1.10 M12 x 28
DV/DFV160L	28.66 728	4.53 115	0.39 10	1.654 42	4.33 110	1.77 45	.47 x .31 x 2.76 12 x 8 x 70	M16 x 1.42 M16 x 36
DV/DFV180	31.50 800	4.53 115	0.39 10	1.890 48	4.33 110	2.03 51.5	.55 x .35 x 3.15 14 x 9 x 80	M16 x 1.42 M16 x 36
DV/DFV200	33.11 841	4.53 115	0.39 10	2.165 55	4.33 110	2.32 59	.63 x .39 x 3.54 16 x 10 x 90	M20 x 1.65 M20 x 42
DV/DFV225	37.20 945	4.53 115	0.39 10	2.165 55	4.33 110	2.32 59	.63 x .39 x 3.54 16 x 10 x 90	M20 x 1.65 M20 x 42

*** Note: See page 18 for tolerances.**

Dimensions subject to change without notice.

آتور صنعت ATOORSANAT SEW EURODRIVE

6. Continuous Running Cooling Fan — VS, V

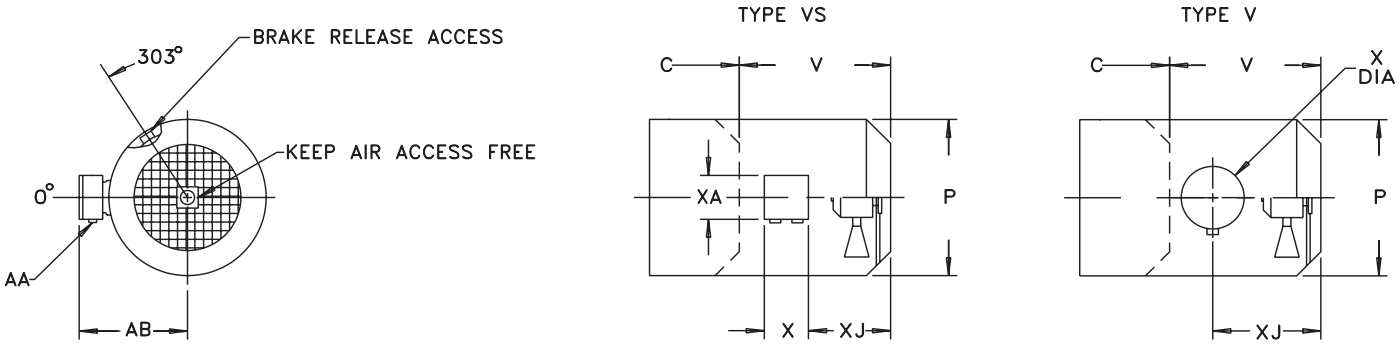

Dimensions are inch / mm

Motor Frame Size	Type	AA	AB	P[1]	V[2]	X	XA	XJ	Amps @ 115V - 1Ph 230V - 1Ph	Amps @ 230V - 3Ph 460V - 3Ph
DT[1]/DFT71.., DT/DFT80..	VS	2 × ½ NPT	6.26 159	5.71 145	6.10 155	5.47 139	4.29 109	.55 14	.63 .27	—
DT[1]/DFT90.., DT/DFT100..	VS	2 × ½ NPT	7.28 185	7.76 197	6.93 176	5.47 139	4.29 109	.75 19	.75 .35	—
DV/DFV112M, DV/DFV132S	VS	2 × ½ NPT	7.76 197	8.70 221	6.69 170	5.47 139	4.29 109	.75 19	.69 .36	—
DV[1]/DFV132M, DV/DFV132ML, DV/DFV160M	V	3/8[3]	6.97 177	10.83 275	9.25 235	2.91 74	—	3.23 82	—	.45 .30
DV[1]/DFV160L, DV/DFV180..	V	3/8[3]	8.07 205	13.03 331	12.05 306	2.91 74	—	4.41 112	—	.49 .33
DV/DFV200.., DV/DFV225..	V	3/8[3]	9.29 236	15.51 394	12.72 323	2.91 74	—	4.69 119	—	.87 .56

[1] P/2 is greater than motor shaft height, D, for the footed motors indicated.
[2] Extension beyond standard motor fanguard. The ventilator will accommodate brakes.
[3] Flexible metal conduit connector.

7. Protective Canopy — C

Dimensions are inch / mm

Motor Frame Size	E	F
DT[1]/DFT71.., DT/DFT80..	5.71 145	1.42 36
DT[1]/DFT90.., DT/DFT100..	7.56 192	1.34 34
DV/DFV112M, DV/DFV132S	8.78 223	1.42 36
DV[1]/DFV132M, DV/DFV132ML, DV/DFV160M	12.24 311	1.46 37
DV[1]/DFV160L, DV/DFV180..	12.24 311	1.57 40
DV/DFV200.., DV/DFV225..	16.33 415	1.85 47

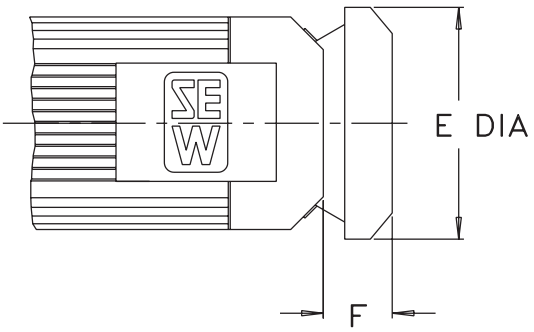

[1] E/2 is greater than the motor shaft height, D, for the footed motors indicated.

8. Encoders

8.1. Output Signal 5V TTL

5V TTL Specifications	
Max Current Consumption — I_{in}	180 mARMS
Max Impulse Frequency — f_{max}	120 kHz
Pulses per Revolution	A, B — 1024 C — 1
Output Amplitude per Channel — V_{high} / V_{low}	≥ 2.5 V_{DC} / ≤ 0.5 V_{DC}
Output Current per Channel — I_{out}	20 mARMS
Mark-space Ratio	1:1 ± 20%
Phase Relationship A:B	90° ± 20%
Ambient Temperature	-25°C to + 60° C
Enclosure	IP56
Connection	Terminal box on encoder

Motor Model	Encoder Model	Encoder Mounting	Part No.	Supply Voltage V_B
DT71.. - DT100..	ES1T[A)]	Encoder with Spread Shaft — ES1.. / ES2..	1852485	5 V_{DC} ± 5%
	ES1R		1860607	+9V_{DC} to +26V_{DC}
DV112.. - DV132S..	ES2T[A)]	Encoder with Spread Shaft — ES1.. / ES2..	1854607	5 V_{DC} ± 5%
	ES2R		1860615	+9V_{DC} to +26V_{DC}
DT71.. - DV225..	EV1T[A)]	Encoder with Solid Shaft — EV1..	1857088	5 V_{DC} ± 5%
	EV1R		1857118	24 V_{DC} ± 20%

[A)] Recommended encoder for operation with MOVITRAC® 31C
Please see page 328 for mounting dimensions.

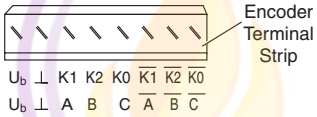

8.2. Output Signal sin/cos

sin/cos Specifications	
Max Current Consumption — I_{in}	160 mARMS
Max Impulse Frequency — f_{max}	120 kHz
Pulses per Revolution	A, B — 1024 C — 1
Output Amplitude per Channel — V_{high} / V_{low}	1 V_{ss} / 1 V_{ss}
Output Current per Channel — I_{out}	40 mARMS
Mark-space Ratio	1:1 ± 20%
Phase Relationship A:B	90° ± 20%
Ambient Temperature	-25°C to +60° C
Enclosure	IP56
Connection	Terminal box on encoder

Motor Model	Encoder Model	Encoder Mounting	Part No.	Supply Voltage V_B
DT71.. - DT100..	ES1S[B)]	Encoder with Spread Shaft — ES1.. / ES2..	1860496	+9V_{DC} to +26V_{DC}
DV112.. - DV132S..	ES2S[B)]	Encoder with Spread Shaft — ES1.. / ES2..	186050X	+9V_{DC} to +26V_{DC}
DT71.. - DV225..	EV1S[B]	Encoder with Solid Shaft — EV1..	185707X	24 V_{DC} ± 20%

[B)] Recommended encoder for operation with MOVIDRIVE®
Please see page 328 for mounting dimensions.

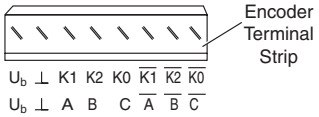

Dimensions subject to change without notice.

آتور صنعت ATOORSANAT SEW EURODRIVE

8.3. Output Signal HTL

HTL Specifications	
Max Current Consumption — I_{in}	340 mARMS
Max Impulse Frequency — f_{max}	120 kHz
Pulses per Revolution	A, B — 1024 C — 1
Output Amplitude per Channel — V_{high} / V_{low}	≥ VB minus 3.5V_{DC} / ≤ 1.5V_{DC}
Output Current per Channel / I_{out}	60 mARMS
Mark-space Ratio	1:1 ± 20%
Phase Relationship A:B	90° ± 20%
Ambient Temperature	-25°C to +60° C
Enclosure	IP56
Connection	Terminal box on encoder

Motor Model	Encoder Model	Encoder Mounting	Part No.	Supply Voltage V_B
DT71.. - DT100..	**ES1C**	Encoder with Spread Shaft — ES1.. / ES2..	1858661	+9V_{DC} to +26V_{DC}
DV112.. - DV132S..	**ES2C**	Encoder with Spread Shaft — ES1.. / ES2..	185867X	+9V_{DC} to +26V_{DC}
DT71.. - DV225..	**EV1C**	Encoder with Solid Shaft — EV1..	1855999	24 V_{DC} ± 20%

Please see page 328 for mounting dimensions.

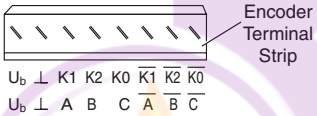

8.4. Absolute Encoder

Absolute Encoder Specifications	
General	
Current Consumption	≤ 250 mA
Max Impulse Frequency — f_{max}	120 kHz
Signal type	incremental + absolute
Vibration (55...2000 Hz)	≤ 100 m/s^2 (9.2 G's)
Maximum encoder speed	6000 rpm (1 LSB for precision)
Operating temperature	-15° C to +60° C
Weight	0.66 lb
Enclosure	IP65 (when mounted)
Connection	1m (3.3 ft.) cable with coupling, 17-pin, pins
Pulse input	according to EIA RS 485
Incremental	
Incremental signal	1 V_{SS}, sin/cos
Resolution	512/track
Maximum operating frequency	100 kHz
Absolute	
Absolute signal	synchronous serial SSI
Sampling code	Code Gray, 24 bits
Resolution	4096 impulses x 4096 revolutions
Data input/output	according to EIA RS 485
Pulse frequency	90..**300**..1100 kHz (max. 100m cable length with 300 kHz)
Pulse pause time	12...35 µs

Motor Model	Encoder Model	Encoder Mounting	Part No.	Supply Voltage V_B
DT71.. - DV225..	**AV1Y**	Encoder with Solid Shaft — AV1Y	1988891	10..**24**..30 V_{DC} polarity reversal protected

Please see page 328 for mounting dimensions.

8.5. Encoder Mounting Dimensions

Size	With / Without Brake	Cable Outlet	
	X_{ES}	α	P
DT71.. [3]/DT80..ES1..	3.27 83	11	5.71 145
DT90..[3]/DT100..ES1..	3.03 77	11	7.76 197
DV112M../DV132S..ES2..	2.99 76	11	8.70 221

[1] Keep air access free
[2] Cable outlet can be positioned at 90° intervals
[3] Foot mounted motors must be supported from below with a spacer

Dimensions are inch / mm

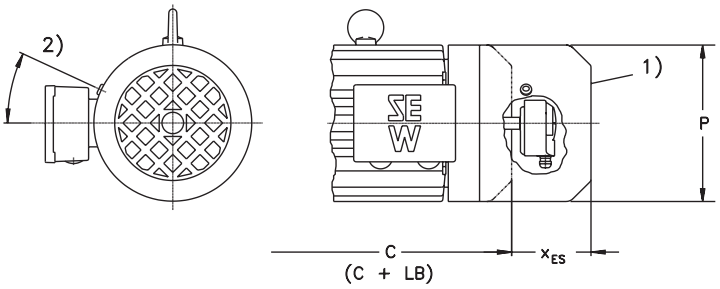

Figure 1
Encoder with Spread Shaft

Size	With / Without Brake	With Forced Cooling With / Without Brake		
	X_{EV}	$X_{EV/VS}$	$x_{EV/V}$	P
DT71..[2]/DT80..EV1../VS	7.95 202	11.54 293	—	5.71 145
DT90..[2]/DT100..EV1../VS	8.07 205	13.07 332	—	7.76 197
DV112M../DV132S..EV1../VS	8.03 204	13.27 337	—	8.70 221
DV132M..[2]/DV160M..EV1../V	9.41 239	—	13.35 339	10.83 275
DV160L..[2]/DV180..EV1../V	11.02 280	—	15.94 405	13.03 331
DV200../DV225..EV1../V	11.46 291	—	16.34 415	15.51 394

[1] Keep air access free
[2] Foot mounted motors must be supported from below with a spacer

Dimensions are inch / mm

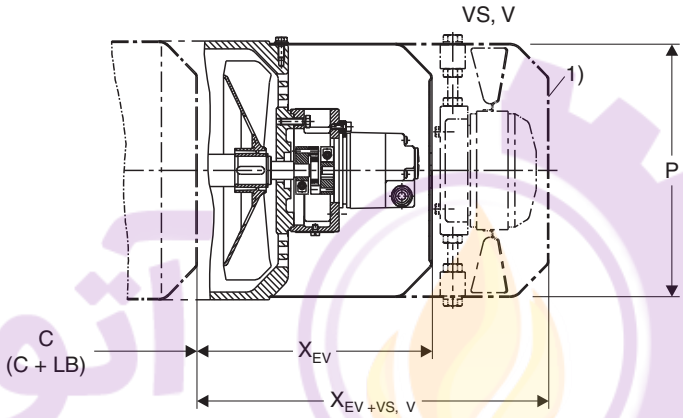

Figure 2
Encoder with Solid Shaft

Size	With / Without Brake	With Forced Cooling With / Without Brake		
	x_{AV1Y}	$x_{AV1Y/VS}$	$x_{AV1YV/V}$	P
DT71..[2]/DT80..AV1Y/VS	7.36 187	11.54 293	—	5.71 145
DT90..[2]/DT100..AV1Y/VS	7.52 191	13.07 332	—	7.76 197
DV112M../DV132S..AV1Y/VS	7.28 185	13.27 337	—	8.70 221
DV132M..[2]/DV160M..AV1Y/V	8.58 218	—	13.35 339	10.83 275
DV160L..[2]/DV180..AV1Y/V	10.20 259	—	15.94 405	13.03 331
DV200../DV225..AV1Y/V	10.20 259	—	16.34 415	15.51 394

[1] Keep air access free
[2] Foot mounted motors must be supported from below with a spacer

Dimensions are inch / mm

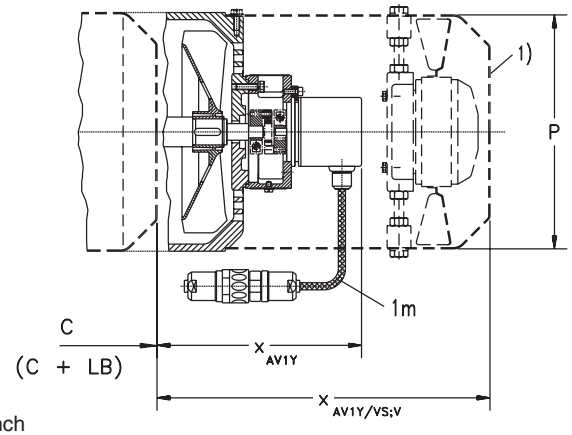

Figure 3
Absolute Encoder

Dimensions subject to change without notice.

آتور صنعت ATOORSANAT SEW EURODRIVE

1. Motor Connection Diagrams

1.1. Dual-Voltage Motors — Single-Speed

Frame Size	Low Voltage	High Voltage
DT71 - DV180	230V - 60Hz	460V - 60Hz
	200V - 50Hz	400V - 50Hz

Frame Size	Low Voltage	High Voltage
DV200 - DV225	230V - 60Hz	460V - 60Hz

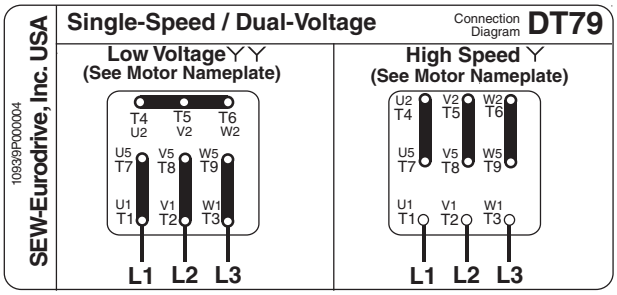

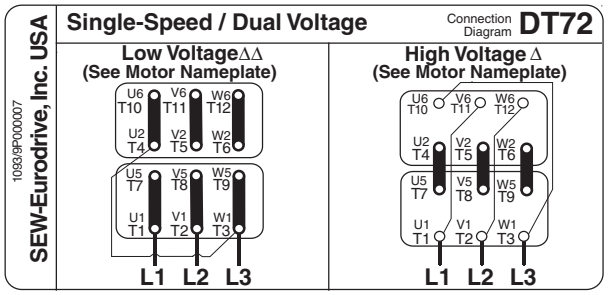

Frame Size	Low Voltage	High Voltage
DT71 - DV225	200V - 50Hz	346V - 50Hz
	208V - 60Hz	360V - 60Hz
	220V - 50Hz	380V - 50Hz
	230V - 50Hz	400V - 50Hz
	240V - 50Hz	415V - 50Hz
	330V - 60Hz	575V - 60Hz

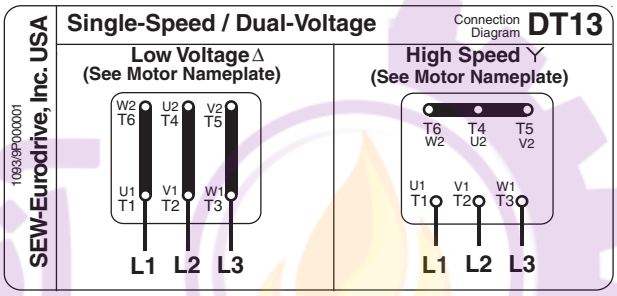

1.2. Single-Voltage Motors — Two-Speed

Frame Size DT71 - DV225

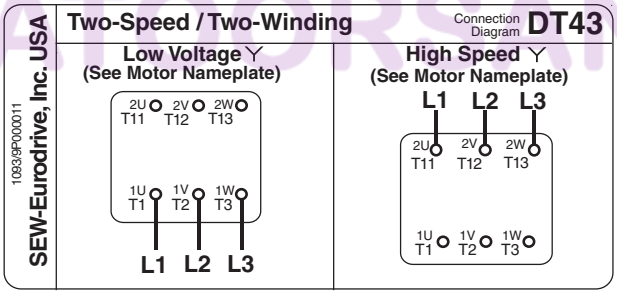

Frame Size DT71 - DV132S

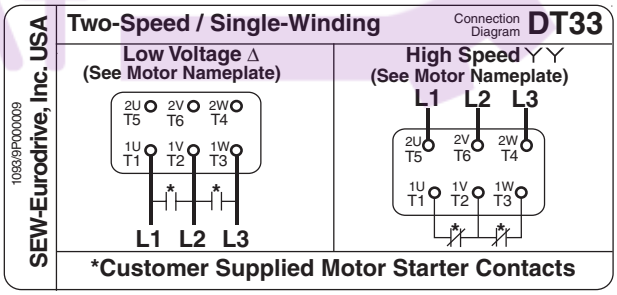

Frame Size D132M - DV225

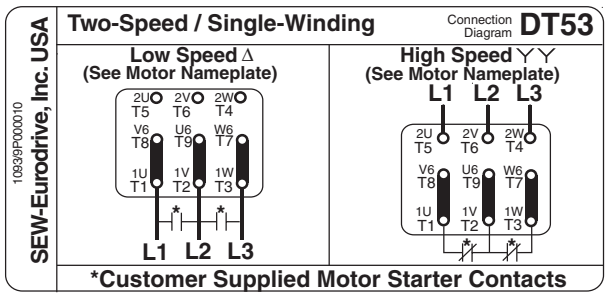

Frame Size DV132M - DV225

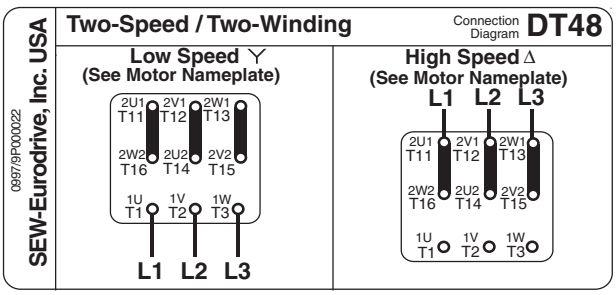

آتور صنعت
ATOORSANAT

1. AC Squirrel-Cage Brakemotors

SEW-Eurodrive brakemotors are designed for continuous duty under difficult conditions when the requirement is to stop a driven machine fast and reliably. All SEW-Eurodrive AC squirrel-cage brakemotors incorporate a disc brake that operates on the "fail-safe" principle, i.e., when the electrical supply is interrupted for any reason, the brake is applied automatically. It operates on DC current supplied by a half-wave rectifier mounted in the motor terminal box.

The drawing below shows both the brake operating principles and it's component cross section. The brake is released as a result of DC current excitation of the brake coil (15). The stationary disc (3) is pulled towards the brake coil body. The brake disc (2) connected to the motor shaft by a splined carrier (21) is released. When the brake coil is de-energized, the brake springs (4) determine the brake torque. Braking torque is produced when the brake springs press against the stationary disc, thereby clamping the brake discs between the stationary disc and the motor end shield (1).

1. Brake end shield
2. Brake disc complete
3. Stationary disc
4. Brake spring
5. Hand lever for manually disengaging the brake; will re-engage itself when released (BM(G)HR - Standard).
6. Manual brake release screw for fixing brake in the disengaged position (BM(G)HF - Optional).
7. Damping plate with nobs (only with BMG brake)
8. Release arm
9. Stud
10. Setting nut
11. Conical spring
12. Dowel pin

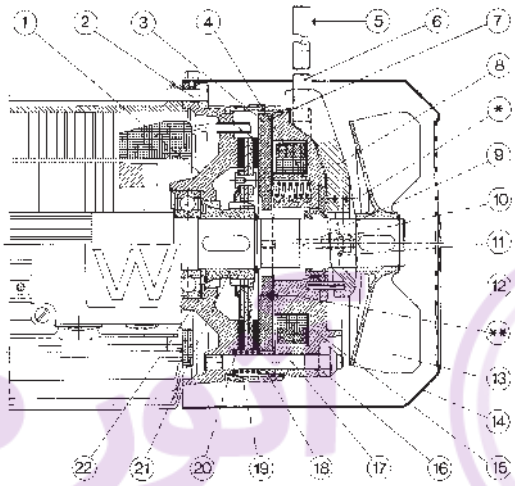

13. Fan
14. Fan guard
15. Brake coil body
16. Brake adjustment nut
17. Retaining screw
18. Pressure ring
19. Rubber sealing band
20. Counter spring
21. Carrier
22. Spring washer

* Floating clearance 0.060″ -0.080″

** Working air gap

Important Note: The BMG type brake, which is replacing the BM style on some motor frame sizes, uses a brake coil which is internally different than the BM brake coil. It also incorporates a dampening liner to work in cooperation with the new coil to achieve the braking action. **While both types of parts appear identical, they must not be interchanged under any circumstances.**

1.1. Braking from the two pole speed (i.e. 3600rpm)

For the brakes on motor frame sizes 160L to 225, continually braking from the two pole speed is not permissible. Emergency braking is conditionally possible. However, please refer to our engineering department in all such applications.

1.2. Brake Control Systems

Depending on the requirements and duty conditions, various brake control systems are available for the DC operated SEW disc brake. All systems are provided with varistor overvoltage protection as a standard feature. If no SEW brake control system is used, a customer provided overvoltage protection must be provided.

For 230/460V motors the standard brake coil voltage is 230V. By connecting the brake rectifier terminals 2 and 3 to the terminals T7 and T8 of the motor 9-terminal block the brake will operate for either a 230V or 460V motor connection.

A 460V brake coil can only be used with a 460V motor connection and the Brake Rectifier terminals 2 and 3 will be connected to terminals T1 and T2 of the motor 9-terminal block. For 575V motors the standard brake coil voltage is 346V. The brake rectifier terminals 2 and 3 will be connected to terminals T3 and T5 of the motor 6-terminal block.

آتور صنعت ATOORSANAT SEW EURODRIVE

The motor nameplate will show the appropriate brake voltage V_B to be applied to the rectifier.

If a VFD or soft start control is used for motor control then the brake cannot be powered from the motor terminal block, it must receive separate supply power.

1.3. Standard Brake Rectifier Wiring Arrangements

Brake rectifiers BG, BGE, BMS, BME, BMH, BMP

For normal brake reaction times (t_{2I}), where the braking time does not have to meet any special requirements, the simplest circuit recommended is with the switch contact on the AC circuit. For rapid brake reaction times (t_{2II}), very short braking times are achieved with simultaneous switch off in the AC and DC circuits.

As shown in the circuit diagrams, with simultaneous switch off in the AC and DC circuits additional leads are required between the brake rectifier and the switch. For applications, where this is not desirable, the brake control system BSR is recommended. It is mounted in the terminal box and carries out the switch off function in the DC circuit the instant the current in the motor ceases to flow.

1.4. Key to brake rectifier wiring diagrams

Switching AC Power to Brake (normal reaction time)

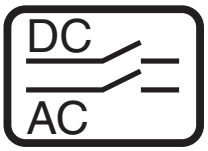

Switching AC Power and DC Circuit to Brake (rapid reaction time)

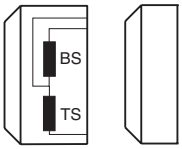

Brake
BS - Accelerator coil
TS - Partial coil

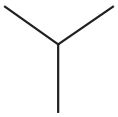

Motor with star connection

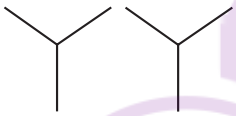

Motor with star-star connection

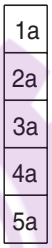

Auxiliary terminal strip in the terminal box

1.5. The BG Brake Rectifier — Standard for frame sizes up to 100, not available on frame sizes above 100

The brake rectifier BG is a half-wave rectifier with overvoltage protection.

This rectifier is used on small motors if no special requirements are needed with respect to the release reaction times of the brake. It cannot be used at elevated ambient temperatures or with unfavorable cooling conditions for the brake.

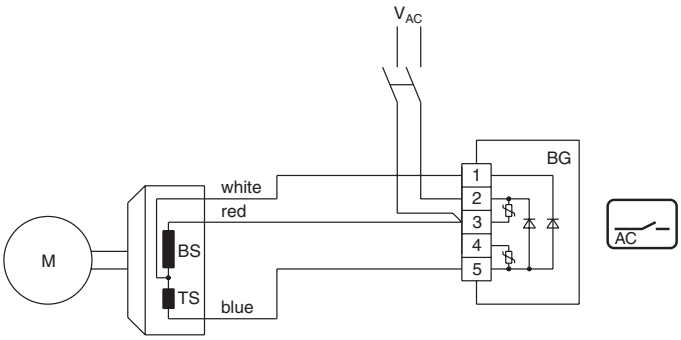

BG Normal Reaction Time

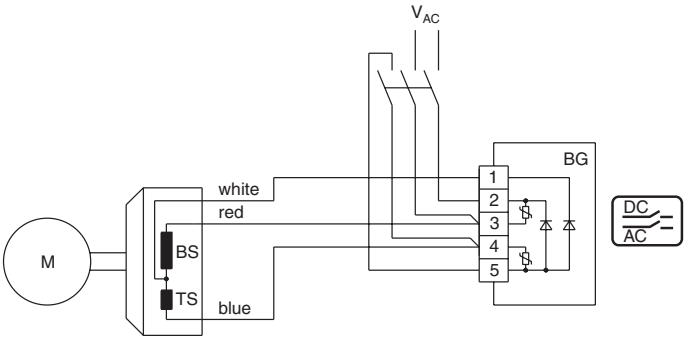

BG Rapid Reaction Time

1.6. The BGE Brake Rectifier - Standard for motor frame sizes 112M and larger, optional on frame sizes 71 to 100

The BGE brake rectifier is a half-wave rectifier with over-voltage protection elements and electronic control for reducing the brake release reaction times.

The brake operation is improved by the BGE rectifier in that it releases the brake initially by super-magnetization and then holds the stationary disc securely with reduced magnetization. Due to the exceedingly reduced brake release reaction time t_1 the brake is released before the motor can build up torque and begin to rotate. Minimum wear with maximum service life and excellent switching ability are the outstanding features of the brake system.

In the continuous released state the current losses are reduced to the necessary minimum so the thermal loading of the brake is very low. The use of the BGE Brake Rectifier is recommended if:

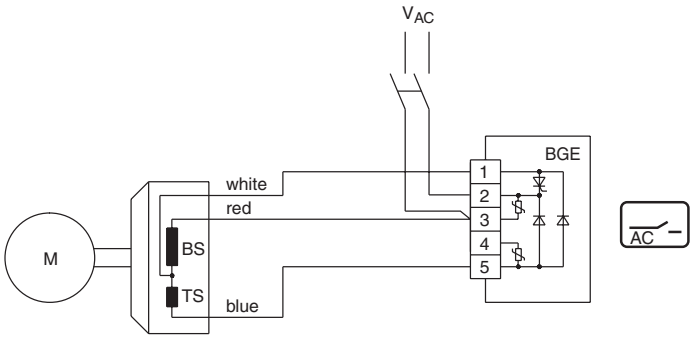

BGE Normal Reaction Time

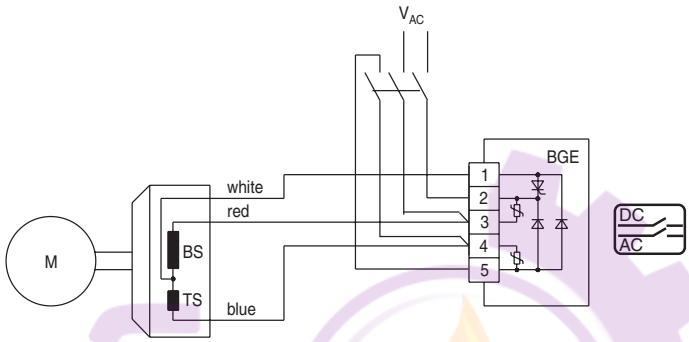

BGE Rapid Reaction Time

- Short brake release reaction times are required.
- High starting frequencies are encountered.
- High ambient temperature is present or the brake is required to be in the continuous released state while the motor is at rest or operating at low speeds.

1.7. The BSG Brake Control Unit - Standard for motor frame sizes 112M and larger, optional on frame sizes 71 to 100

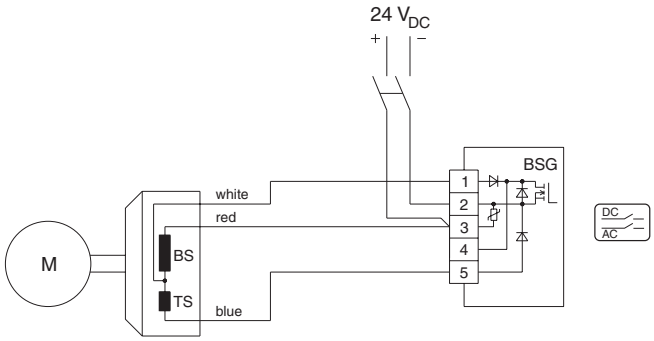

BSG Rapid Reaction Time

For 24VDC power supply to the brake the control unit BSG is available. With this control unit the same brake release reaction times as with the brake rectifier BGE are attained. If no BSG brake control system is installed a customer provided overvoltage protection must be provided.

1.8. The BMH Brake Rectifier - Optional for frame sizes 71 to 225

For low ambient temperatures the BMH Brake Rectifier with a heating current is available for heating the brake while the motor is at rest. Electric heating is always recommended where moisture condensation followed by frost may occur or where wet corrosive atmosphere with long periods of rest are to be expected. The BMH unit has the same electronic circuitry as the BGE and thus provides the same short reaction times for the BM(G) brake. The BMH is designed as a module in a DIN rail housing with plug-in connections for control cabinet installation.

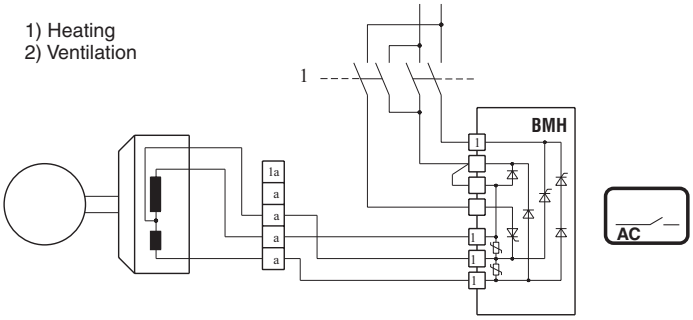

BMH Normal Reaction Time

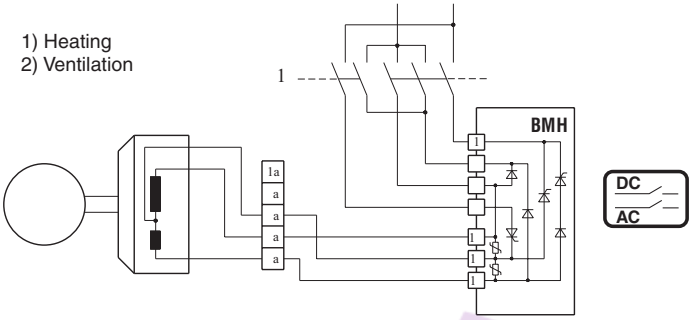

BMH Rapid Reaction Time

1.9. The BMS Brake Rectifier - Optional for frame sizes up to 100 not available on frame sizes above 100

The brake rectifier BMS is a half-wave rectifier with protective elements against overvoltage. It functions like the rectifier type BG, however, it is designed to be mounted in a control panel on DIN rail and not in the motors conduit box. The BMS can be wired to operate for normal or rapid brake reaction times. The BMS rectifier is primarily used when the ambient conditions of the motor preclude the use of the BG rectifier mounted in the motors terminal box.

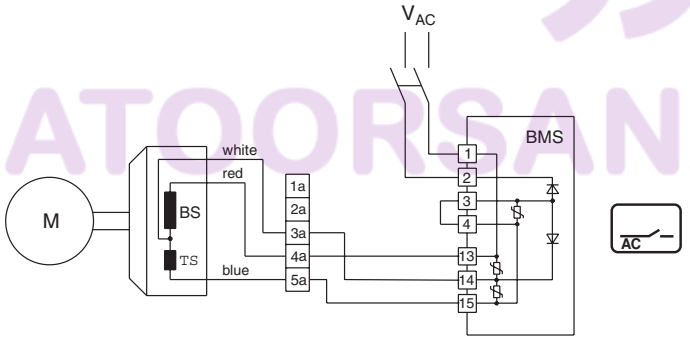

BMS Normal Reaction Time

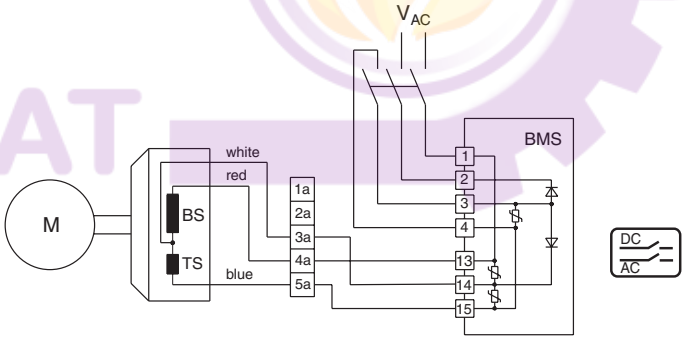

BMS Rapid Reaction Time

1.10. The BME Brake Rectifier - Optional for frame sizes 71 to 225

The BME brake rectifier is a half-wave rectifier with overvoltage protection elements and electronic control for reducing the brake release reaction times. It functions like the rectifier type BGE, however, it is designed to be mounted in a control panel on DIN rail and not in the motors conduit box. The BME has the same high performance functions as the BGE for rapid brake release, which allow the motor brake system to cycle at a very high rate. The BME can we wired to operate for normal or rapid brake reaction times. The BME is primarily used when the ambient conditions of the motor preclude the use of the BGE rectifier mounted in the motors terminal box.

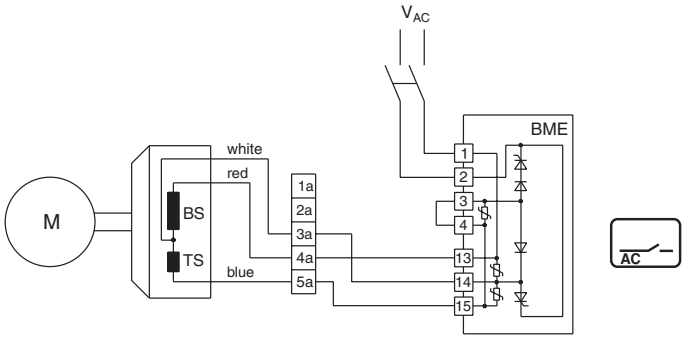

BME Normal Reaction Time

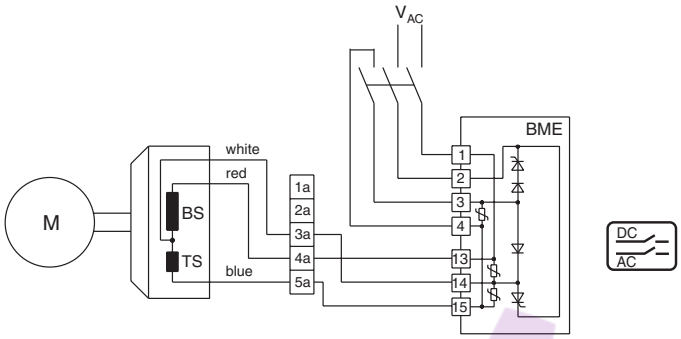

BME Rapid Reaction Time

1.11. The BMP Brake Control System - Optional for frame sizes 71 to 225

The BMP control system is a BME brake rectifier with an integrated voltage relay. The BMP minimizes response and reaction times and reduces cabling between the switch cabinet and the brake motor. It functions like the rectifier type BGE and the voltage relay UR combined into one device. It is designed to be mounted in a control panel on DIN rail and not in the motors conduit box. The BMP has the same high performance functions as the BGE for fast rake release, which allow the motor brake system to cycle at a very high rate. The BMP rectifier will automatically provide the fast brake reaction function of the UR relay without the requirement of external wiring.

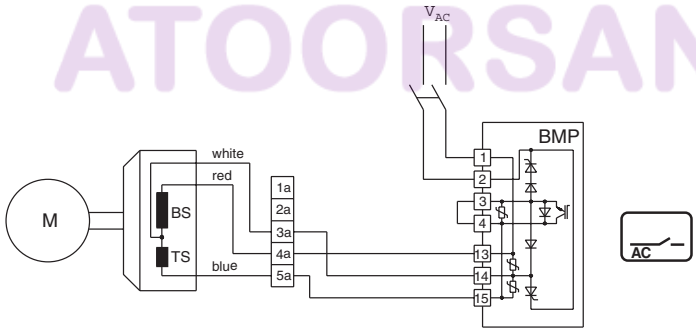

BMP Normal Reaction Time

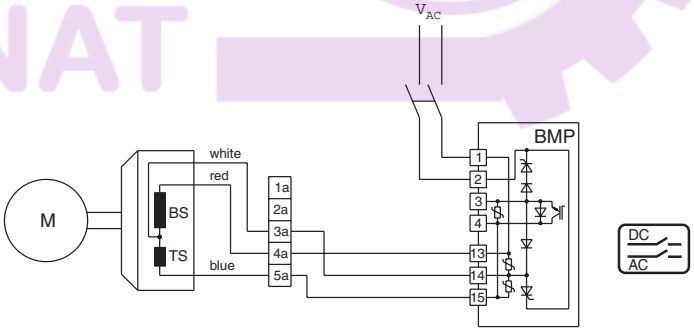

BMP Rapid Reaction Time

ATOORSANAT

1.12. The BMK Brake Control System - Optional for frame sizes 71 to 225

The BMK rectifier functions like the rectifier type BGE, however, it is controlled directly by a $24V_{DC}$ control signal. The BMK is powered with the required AC supply voltage to operate the brake but the brake release is controlled by a $24V_{DC}$ control signal. It is designed to be mounted in a control panel on DIN rail and not in the motors conduit box.

Benefits:

- Direct control using $24V_{DC}$ output signal from a PLC
- Direct control of the brake from an inverter (MOVITRAC®, MOVIDRIVE®, MOVIDYN®) output signal
- Eliminates the need for a brake control brake power contact in most PLC and inverter installations

The BMK has the same high performance functions as the BGE for fast brake release, which allow the motor brake system to cycle at a very high rate.

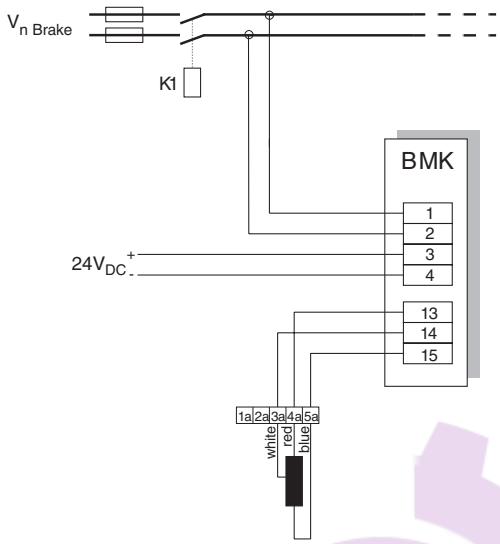

WARNING
IN THE CASE OF AN EMERGENCY STOP, AN ALL-POLE DISCONNECTION OF THE SUPPLY VOLTAGE IS ABSOLUTELY NECESSARY!

1.13. The BSR Brake Control System

The BSR control system achieves the shortest brake reaction and brake release reaction times without any external control equipment or additional wiring leads. The BSR brake control system combines the brake rectifier BGE (for motor frame sizes 71 to 225) with an electronic, current relay SR, which is mounted in the terminal box. The SR takes care of the task of rapidly demagnetizing the brake.

The SR current relay is fed with current from a voltage phase feeding the motor while the motor is running. When the motor is switched off, the current relay, SR, switches instantly to cause the rectifier to demagnetize the brake.

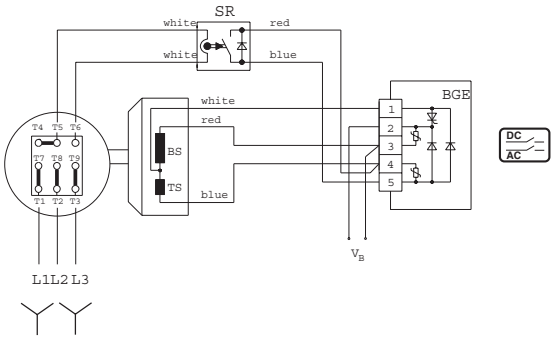

BSR Normal Reaction Time

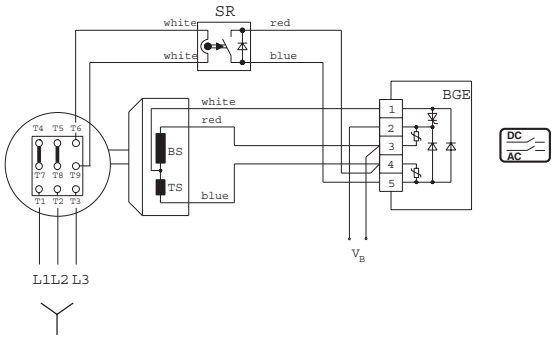

BSR Rapid Reaction Time

The BSR system is only suitable for single speed motors with current ratings up to 50 Amps.

1.14. The BUR Brake Actuator

The control system BUR is an integrated combination, in the terminal box, of the brake rectifier BGE (for motor frame sizes 71 through 200), BG (for motor frame size 63) and the voltage relay UR. It is specially suited for two-speed or speed controlled AC squirrel-cage motors or DC motors, which require a very rapid brake reaction time. For these applications it is a characteristic that the AC supply for the brake rectifier is run separately to the terminal box.

The voltage relay UR with power supply interruption separates the DC circuit of the brake and thereby ensures a rapid demagnetizing of the brake.

The control system BUR achieves the shortest brake reaction and brake release reaction times without additional conductor leads requirement between the switch cabinet and brake motor and also without external contactors.

The control system BUR is available for power supplies 42V through 500V and a maximum holding current of 1 A.

The BSR and BUR engage a PG threaded conduit aperture of the terminal box. Should the standard four PG threaded conduit apertures not be sufficient for the cabling, please consult us.

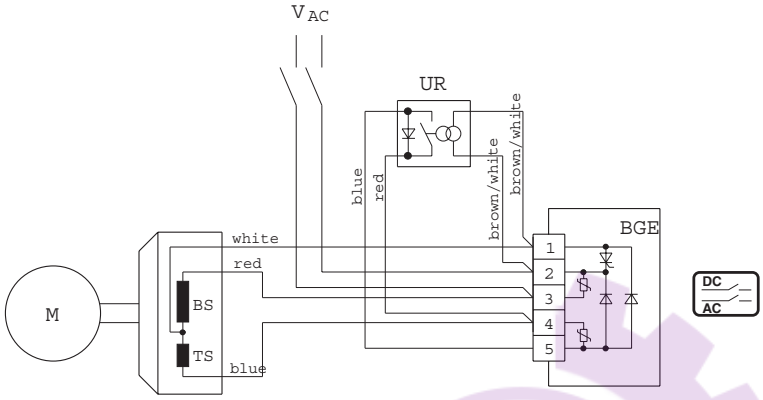

WARNING
THE POWER SUPPLY IS WITH SEPARATE SUPPLY LEADS. THE CONNECTION TO THE TERMINAL BOARD OF THE MOTOR IS NOT PERMISSIBLE.

ATOORSANAT

1.15. Mechanical Features of the Brake Rectifier and Brake Control Systems

All brake rectifiers for the BM(G) brake have the same external dimensions (except for the DIN rail mounted units). The BG and BGE units are preferably mounted in the motor terminal box, but can also be supplied for switch cabinet installation. The BMS, BME, BMH, BMP and BMK units are for DIN rail mounting.

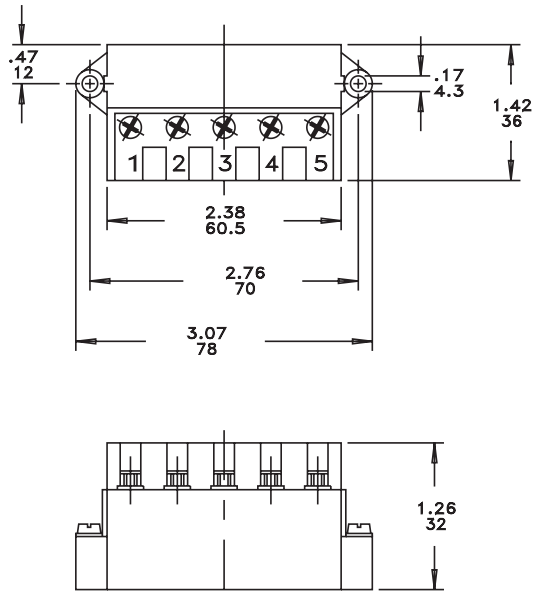

BG, BGE, BSG Brake Rectifiers

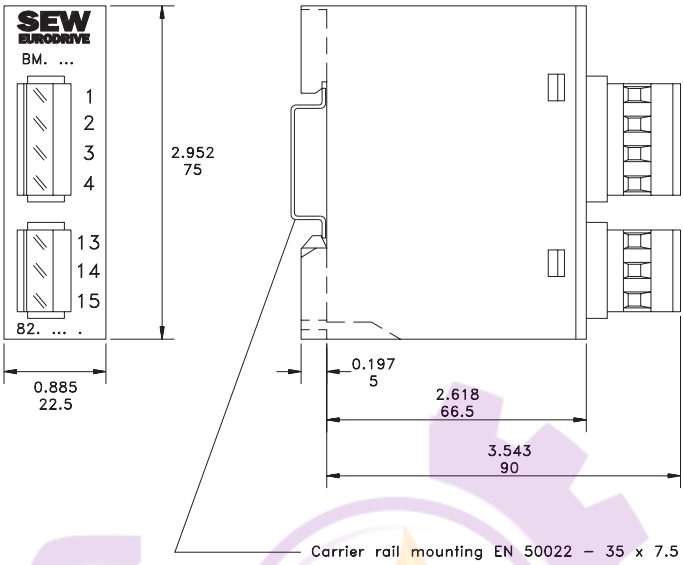

BMS, BME, BMH, BMP, BMK Brake Rectifiers

UR/SR Relay

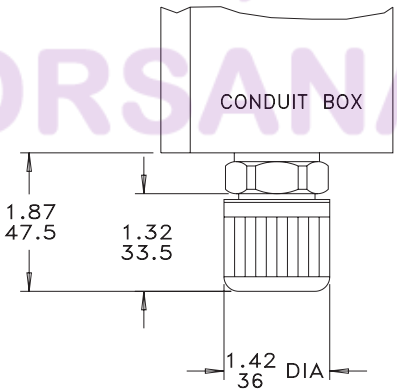

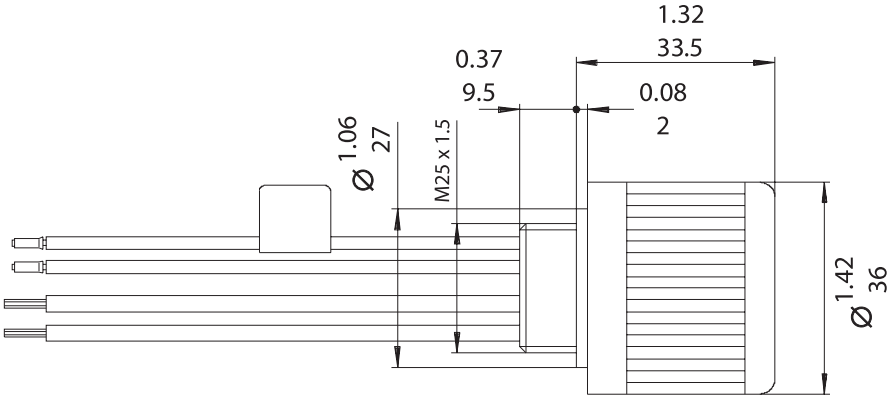

آتور صنعت
ATOORSANAT

1.16. Brake Rectifiers — Technical Data

Terminal Box Mounted				
Type	**Voltage**	**Maximum Current**	**Color**	**Part Number**
BG1	42 - 500 VAC	1.5 ADC	Black	825 590 3
BG1.5	150 - 500 VAC	1.5 ADC	Black	825 384 6
BG3	42 - 150 VAC	3.0 ADC	Brown	825 386 2
BG6	20 - 30 VAC	6.0 ADC	Lavender	826 350 7
BGE1.5	150 - 500 VAC	1.5 ADC	Red	825 385 4
BGE3	42 - 150 VAC	3.0 ADC	Blue	825 387 0
BSG (24V Controller)	20 - 30 VDC	5.0 ADC	White	825 459 1
Auxiliary terminal strip			Black	183 060 0

DIN Rail Mounted				
Type	**Voltage**	**Maximum Current**	**Color**	**Part Number**
BMS1.5	150 - 500 VAC	1.5 ADC	Black	825 802 3
BMS3	42 - 150 VAC	3.0 ADC	Brown	825 803 1
BME1.5	150 - 500 VAC	1.5 ADC	Red	825 722 1
BME3	42 - 150 VAC	3.0 ADC	Blue	825 723 X
BMP1.5	150 - 500 VAC	1.5 ADC	Gray	825 685 3
BMH1.5	150 - 500 VAC	1.5 ADC	Green	825 818 X
BMH3	42 - 150 VAC	3.0 ADC	Yellow	825 819 8
BMK1.5	150 - 500 VAC, 12 - 32 VDC	1.5 ADC	Turquoise	826 463 5
BMK3	42 - 150 VAC, 12 - 32 VDC	3.0 ADC	Pink	826 567 4

Brake Control Relays					
Type	**Thread**	**Voltage**	**Motor Phase Current**	**Brake Current**	**Part Number**
SR11	M25 x 1.5	—	0.6 - 10 AAC	1.0 ADC	826 761 8
SR15	M25 x 1.5	—	10 - 50 AAC	1.0 ADC	826 762 6
UR11	M25 x 1.5	42 - 150 VAC	—	1.0 ADC	826 758 8
UR15	M25 x 1.5	150 - 500 VAC	—	1.0 ADC	826 759 6

Plug Adapters	
Type	**Part Number**
M16 x 1.5 - 1/2 NPT	186 604 0
M20 x 1.5 - 1/2 NPT	186 605 2
M25 x 1.5 - 1/2 NPT	186 686 9
M25 x 1.5 - 3/4 NPT	186 606 0
M32 x 1.5 - 1/2 NPT	186 607 9

آتور صنعت ATOORSANAT

آتور صنعت ATOORSANAT SEW EURODRIVE

1.17. Permissible Brake Work

The permissible brake work per braking operation is as follows. Since the actual permissible brake work is dependent upon the brake size as well as the motor speed, please submit full details to our engineering department, if the actual brake work exceeds the values listed in the table.

Brake Work lb-ft	7,400	1,500	150	15
Stops per Hour	10	100	1,000	10,000

Frame		T_B Max lb-in.	T_B Reduced Brake Torque lb-in.				W_2 [5] lb-ft x 10^6	t_1 [1] ms	t_2 [3]		P_B [6] W
Motor	Brake								$t_{2\,II}$ ms	$t_{2\,I}$ ms	
DT71../80..	BM(G)05	44	35	22	14	11	88.5	30[2] 20	5	35	32
DT80..	BM(G)1	88	66	53			88.5	50[2] 20	8	40	36
DT90../100..	BM(G)2	177	142	88	58	44	192	70[2] 30	12	80	40
DT100..	BM(G)4	354	266	212			192	130[2] 35	15	80	50
DV112M	BM(G)8	487	398 168	327 112	266 84		442.5	30	12	60	57
DV132S	BM(G)8	664	487 168	398 112	327 84	266	442.5	35	10	50	57
DV132M	BM15	885	664	442	310	221	738	40	14	70	95
DV132ML/160M	BM15	1328	1106 442	885 310	664 221		738	50	12	50	95
DV160L	BM30	1770	1328 664	1106 442	885		1106	55	18	90	95
DV180..	BM30	2655	2212 885	1770 664	1328 442	1106	1106	60	16	80	95
DV200../225..	BM31	2655	2212 885	1770 664	1328 442	1106	1106	60	16	80	95
DV180..	BM32[4]	2655	2212	1770	1328	885	1106	55	18	90	95
DV200../225..	BM62[4]	5310	4425 1770	3540 1328	2655 885	2212	1106	60	16	80	95

[1] Brake Release Times t_1 (Apply only for $T_{B\,Max}$)
[2] These values apply with the use of the BG Rectifier, all other values in the column apply with the use of the BGE Rectifier.
[3] Brake Reaction Times t_2 (Apply only for $T_{B\,Max}$)
t_{2II}: Fast Response - simultaneous switch off in the AC and DC circuits
t_{2I}: Normal Response - switch off in the AC circuit
[4] Double Disc Brake
[5] W_2 – Permissible brake work until brake needs to be readjusted.
[6] P_B – Power consumption of the brake coil

Notes

آتور صنعت
ATOORSANAT

آتور صنعت
ATOORSANAT
SEW EURODRIVE

Address List

		USA	
Production ***Assembly*** ***Sales*** ***Service***	***South Carolina***	SEW-EURODRIVE INC. 1295 Old Spartanburg Highway P.O. Box 518 Lyman, S.C. 29365	Tel. (864) 439-7537 Fax Sales (864) 439-7830 Fax Mfg. (864) 439-9948 Fax Assembly (864) 439-0566 Telex 805 550 E-mail: cslyman@seweurodrive.com
Assembly ***Sales*** ***Service***	***California***	SEW-EURODRIVE INC. 30599 San Antonio St. Hayward, California 94544-7101	Tel. (510) 487-3560 Fax (510) 487-6381 E-mail: cshayward@seweurodrive.com
	New Jersey	SEW-EURODRIVE INC. Pureland Ind. Complex 200 High Hill Road, P.O. Box 481 Bridgeport, New Jersey 08014	Tel. (856) 467-2277 Fax (856) 845-3179 E-mail: csbridgeport@seweurodrive.com
	Ohio	SEW-EURODRIVE INC. 2001 West Main Street Troy, Ohio 45373	Tel. (9 37) 335-0036 Fax (9 37) 440-3799 E-mail: cstroy@seweurodrive.com
	Texas	SEW-EURODRIVE INC. 3950 Platinum Way Dallas, Texas 75237	Tel. (214) 330-4824 Fax (214) 330-4724 E-mail: csdallas@seweurodrive.com
		Canada	
Assembly ***Sales*** ***Service***	***Toronto***	SEW-EURODRIVE CO. OF CANADA LTD. 210 Walker Drive Bramalea, Ontario L6T3W1	Tel. (905) 791-1553 Fax (905) 791-2999
	Vancouver	SEW-EURODRIVE CO. OF CANADA LTD. 7188 Honeyman Street Delta. B.C. V4G 1 E2	Tel. (604) 946-5535 Fax (604) 946-2513
	Montreal	SEW-EURODRIVE CO. OF CANADA LTD. 2555 Rue Leger Street LaSalle, Quebec H8N 2V9	Tel. (514) 367-1124 Fax (514) 367-3677
		USA District Sales Offices	
	Alabama	BOB WHITTLESEY 3500 Teton Circle Birmingham AL 35216	Tel. (205) 979-3484 Fax (205) 822-1838
	Arkansas	ED LOCKETT 1402 Trails Edge Drive Conway AR 72032	Tel. (501) 336-8620 Fax (501) 327-8579
	California	RICK BURDICK 3942 Canyon Terrace Yorba Linda CA 92686	Tel./Fax (714) 970-6197
		MICHAEL HASKINS 7750 Chisamore Ranch Lane Vacaville CA 95688	Tel./Fax (707) 453-1550
		ROBERT HOEHN 11101 Gardenaire Lane Garden Grove CA 92841-1325	Tel./Fax (714) 537-3290
		JOHN McNAMEE 1736 McClellan Drive Stockton CA 95207	Tel./Fax (209) 473-4887 Mobile (209) 481-6928
	Colorado	BRUCE COOPER 686 Lookout Mountain Road Golden CO 80401	Tel./Fax (303) 526-0228
	Connecticut	DAVID DANFORTH 9 Windmill Road Ellington CT 06029	Tel. (860) 875-7938 Fax (860) 870-1025
	Florida	TONY O. TOLEDO 902 25th Avenue W. Palmetto FL 34221	Tel. (941) 729-0717 Fax (941) 729-7507

آتور صنعت ATOORSANAT

USA District Sales Offices

Georgia	JIM GARRETT 3843 Boulder Creek Rd. Martinez GA 30907	Tel. (706) 210-0116 Fax (706) 228-4990
	JAMES WALSH 2417 Courtney Renea Drive Dacula GA 30019	Tel. (770) 237-8734 Fax (770) 237-5735
Idaho	DUWAYNE HOGAN 3622 Hillcrest Drive Coeur d'Alene ID 83815	Tel./Fax (208) 667-0414
Illinois	TOM ELLIS 205 W. Prairie Lane Princeton IL 61356	Tel. (815) 872-5200 Fax (815) 872-5202
	SCOTT R. JOHNSON 52 Boxwood Lane Cary IL 60013	Tel. (847) 639-9774 Fax (847) 639-9775
	JEFFREY L. WESTROM 2 S. 111 Stratford Road Glen Ellyn IL 60137	Tel. (630) 790-2868 Fax (630) 790-2878
Indiana	TED KNUE 2070 Lake Run Drive Greenwood IN 46143	Tel. (317) 888-9355 Fax (317) 882-0746
	MARVIN SEWELL 4616 N. State Rd. 3 Deputy, IN 47230	Tel. (812) 866-5626 Fax (812)866-2990
Iowa	JOHN HOHNSTEIN 10505 Hawks Haven Road Cedar Rapids IA 52411	Tel. (319) 378-1642 Fax (319) 378-5585
	MIKE MARKSBURY 3510 Lindenwood Street Sioux City IA 51104	Tel. (712) 255-3662 Fax (712) 258-9299
Kansas	GREG WHITE 15325 W. 84th Terrace Lenexa, Kansas 66219	Tel. (913) 310-0399 Fax (913) 310-0323
Kansas (South)	LOUIS BRANKEL 3301 S. 139th E. Avenue Tulsa OK 74134	Tel. (918) 437-4370 Fax (918) 437-4390
Kentucky	MARVIN SEWELL 4616 N. SR 3 Deputy IN 47230	Tel. (812) 866-5626 Fax (812) 866-2990
Louisiana	SHELDON ANDERSON 230 Anderson Road Quitman LA 71268	Tel. (318) 395-1001 Fax (318) 395-1002
Maryland	THOMAS MARTIN 102 Tidewater Drive Havre de Grace MD 21078	Tel. (410) 939-8503 Fax (410) 939-8457
Massachusetts	JOHN M. HEBERT 2 King Arthur Court Boxford MA 01921	Tel./Fax (978) 887-7070
Michigan	CHARLES F. MCLAUGHLIN 2991 Baldwin Road Lake Orion MI 48360	Tel. (248) 391-0543 Fax (248) 391-0563
	JEFFREY ROBINSON 56869 Copperfield Drive Shelby Twp. MI 48316-4862	Tel. (586) 786-1930 Fax (586) 786-1931
	District Sales Representative L.H. FLAHERTY COMPANY LARRY FLAHERTY DENNY DUIMSTRA 1577 E. Jefferson, S.E. Grand Rapids MI 49507	Tel. (616) 245-9266 (800) 878-0081 Fax (616) 241-0954

آتور صنعت ATOORSANAT

آتور صنعت ATOORSANAT SEW EURODRIVE

USA District Sales Offices

Minnesota	ANDY SEMELIS 8605 Yalta Street, N.E. Circle Pines MN 55014	Tel. (763) 780-1810 Fax (763) 780-3777
Missouri	GREGORY R. TUCKER 3618 Coffee Tree Court St. Louis MO 63129	Tel. (314) 845-6128 Fax (314) 845-6129
New Jersey	EDWARD McLAUGHLIN 7 Ridgeview Lane Port Jervis NY 12771	Tel. (845) 856-8811 Fax (845) 856-8844
	EDWARD TUCKER 806 Front Street Glendora NJ 08029	Tel. (856) 939-2535 Fax (856) 939-2114
New York	ART CONNER 112 Calvert Blvd. Tonawanda NY 14150	Tel. (716) 695-7728 Fax (716) 695-9109
	PETER T. SCHMITT 4627 Slippery Rock Manlius NY 13104	Tel. (315) 682-5369 Fax (315) 682-3556
	RICHARD MAGGIO 38 Roe Street Melville NY 11747	Tel. (631) 549-8750 Fax (631) 351-0872
North Carolina	BRENT CRAFT 4004 Smithfield Road Greensboro NC 27406	Tel. (336) 674-5361 Fax (336) 674-1290
	JACK F. JUNG 117 N. Brackenbury Lane Charlotte NC 28270	Tel. (704) 362-2674 Fax (704) 362-2961
Ohio	DAN BAGLIONE 520 Lorraine Ave. PO Box 1093 Bowling Green OH 43402	Tel. (419) 353-0122 Fax (419) 353-2209
	LOWELL BISHOP 4080 Bayberry Court Columbus OH 43220	Tel. (614) 538-0880 Fax (614) 538-0889
	GUY BORCHERS 82 Countryside Drive N. Troy OH 45373	Tel. (937) 339-1333 Fax (937) 339-1140
	JOHN HERSTINE 248 Plain Street PO Box 82 Magnolia OH 44643	Tel. (330) 866-2544 Fax (330) 866-2553
	ROBERT SCHMIDT 1214 Shady Lakes Dr Kent OH 44240	Tel. (330) 678-2550 Fax (330) 678-2446
Oklahoma	LOUIS BRANKEL 3301 S. 139th E. Avenue Tulsa OK 74134	Tel. (918) 437-4370 Fax (918) 437-4390
Oregon	MICHAEL S. JOHNSON 15804 N.E. 160 Ct Brush Prairie WA 98606	Tel./Fax (360) 256-1785
Pennsylvania	SCOTT BANSKY 1213 Milton Street Pittsburgh PA 15218	Tel. (412) 243-9040 Fax (412) 243-9041
	MARK BETZER RR2, Box 1390 Milton PA 17847	Tel. (570) 742-1360 Fax (570) 742-1361
	PAUL E. DECKER 245 Washington Street Red Hill PA 18076	Tel./Fax (215) 679-5638 Fax (215) 679-6281
	JOHN SHOOP 11 Price Drive Hughesville PA 17737	Tel./Fax (570) 584-4368 Fax (570) 584-5097

آتور صنعت ATOORSANAT

USA District Sales Offices

	South Carolina	BILL KINARD 20 Wrenwood Court Greer SC 29651	Tel. (864) 288-2725 Fax (864) 288-3573
	Tennessee	RUSSELL MOOK 2501 Golden Pond Lane, Spring Hill TN 37174	Tel. (931) 486-3242 Fax (931) 486-1281
	Texas	JOHN HILL 170 Benchmark Trail Belton TX 76513	Tel. (254) 780-1251 Fax (254) 780-1074
		KYLE M. SANDY 2828 Rosedale Dallas TX 75205	Tel. (214) 696-5595 Fax (214) 696-0242
		STEWART SAPPINGTON 13519 Fawcett Houston TX 77069	Tel. (281) 893-2377 Fax (281) 893-1554
		MIKE STEWART 2903 Shadwell Lane Mesquite TX 75149	Tel. (972) 289-7996 Fax (972) 288-3549
	Utah	STEVEN JACOBSON 5520 S 225 E Ogden UT 84405	Tel. (801) 612-9558 Fax (801) 612-9561
	Virginia	HANK HANNAM Rt. 2, Box 636 Forest VA 24551	Tel. (804) 525-5394 Fax (804) 525-5694
		CHRIS WOOD 12211 Poplar Forest Drive Richmond VA 23233	Tel. (804) 740-2269 Fax (804) 741-5141
	Washington	WILLIAM A. ASCHENBRENNER 3687 Duwamish Ave. South Seattle WA 98134	Tel. (206) 264-0545 Fax (206) 264-1545
	Wisconsin	FRANK CARR PO Box 306 Menasha WI 54952	Tel. (920) 751-3871 Fax (920) 751-0107
		WALTER STURGEON 3585 South Rivershire Drive Suite 6 Greenfield, WI 53228	Tel. (414) 321-9627 Fax (414) 321-9637

Algeria

Technical Office	***Alger***	Réducom 16, rue des Frères Zaghnoun Bellevue El-Harrach 16200 Alger	Tel. 2 82 22 84 Fax 2 82 22 84

Argentina

Assembly ***Sales*** ***Service***	***Buenos Aires***	SEW EURODRIVE ARGENTINA S.A. Centro Industrial Garin, Lote 35 Ruta Panamericana Km 37,5 1619 Garin	Tel. (3327) 45 72 84 Fax (3327) 45 72 21 sewar@sew-eurodrive.com.ar

Australia

Assembly ***Sales*** ***Service***	***Melbourne***	SEW-EURODRIVE PTY. LTD. 27 Beverage Drive Tullamarine, Victoria 3043	Tel. (03) 99 33 10 00 Fax (03) 99 33 10 03
	Sydney	SEW-EURODRIVE PTY. LTD. 9, Sleigh Place, Wetherill Park New South Wales, 2164	Tel. (02) 97 25 99 00 Fax (02) 97 25 99 05

Austria

Assembly ***Sales*** ***Service***	***Wien***	SEW-EURODRIVE Ges.m.b.H. Richard-Strauss-Strasse 24 A-1230 Wien	Tel. (01) 6 17 55 00-0 Fax (01) 6 17 55 00-30 sew@sew-eurodrive.at

آتور صنعت ATOORSANAT

آتور صنعت ATOORSANAT SEW EURODRIVE

		Bangladesh	
	Dhaka	Triangle Trade International Bldg-5, Road-2, Sec-3, Fax 02 89 33 44 Uttara Model Town Dhaka-1230 Bangladesh	Tel. 02 89 22 48
		Belgium	
Assembly ***Sales*** ***Service***	***Brüssel***	CARON-VECTOR S.A. Avenue Eiffel 5 B-1300 Wavre	Tel. (010) 23 13 11 Fax (010) 2313 36 http://www.caron-vector.be info@caron-vector.be
Technical Office	***Vlaanderen***	CARON-VECTOR S.A. Industrieweg 112-114 B-9032 Gent (Wondelgem)	Tel. (32) 09/2 27 34 52 Fax (32) 09/2 27 41 55
		Bolivia	
	La Paz	LARCOS S. R. L. Calle Batallon Colorados No.162 Piso 4 La Paz	Tel. 02 34 06 14 Fax 02 35 79 17
		Brazil	
Production ***Sales*** ***Service***	***Sao Paulo***	SEW DO BRASIL Motores-Redutores Ltda. Rodovia Presidente Dutra, km 208 CEP 07210-000 - Guarulhos - SP	Tel. (011) 64 89-64 33 Fax (011) 64 80-46 12 sew@sew.com.br
	Additional addresses for service in Brazil provided on request!		
		Bulgaria	
Sales	***Sofia***	BEVER-DRIVE GMBH Bogdanovetz Str.1 BG-1606 Sofia	Tel. (92) 9 53 25 65 Fax (92) 9 54 93 45 bever@mbox.infotel.bg
		Cameroon	
Technical Office	***Douala***	Electro-Services Rue Drouot Akwa B.P. 2024 Douala	Tel. 43 22 99 Fax 42 77 03
		Chile	
Assembly ***Sales*** ***Service***	***Santiago de Chile***	SEW-EURODRIVE CHILE Motores-Reductores LTDA. Panamericana Norte No 9261 Casilla 23 - Correo Quilicura RCH-Santiago de Chile	Tel. (02) 6 23 82 03+6 23 81 63 Fax (02) 6 23 81 79
		China	
Production ***Assembly*** ***Sales*** ***Service***	***Tianjin***	SEW-EURODRIVE (Tianjin) Co., Ltd. No. 46, 7th Avenue, TEDA Tianjin 300457	Tel. (022) 25 32 26 12 Fax (022) 25 32 26 11
		Colombia	
Assembly ***Sales*** ***Service***	***Bogotá***	SEW-EURODRIVE COLOMBIA LTDA. Calle 22 No. 132-60 Bodega 6, Manzana B Santafé de Bogotá	Tel. (0571) 5 47 50 50 Fax (0571) 5 47 50 44 sewcol@andinet.com
		Croatia	
Sales ***Service***	***Zagreb***	KOMPEKS d. o. o. PIT Erdödy 4 II HR 10 000 Zagreb	Tel. +385 14 61 31 58 Fax +385 14 61 31 58
		Czech Republic	
Sales	***Praha***	SEW-EURODRIVE S.R.O. Business Centrum Praha Luná 591 16000 Praha 6	Tel. 02/20 12 12 34 + 20 12 12 36 Fax 02/20 12 12 37 sew@sew-eurodrive.cz

آتور صنعت ATOORSANAT

Denmark

Assembly ***Sales*** ***Service***	***Kopenhagen***	SEW-EURODRIVEA/S Geminivej 28-30, P.O. Box 100 DK-2670 Greve	Tel. 4395 8500 Fax 4395 8509 http://www.sew-eurodrive.dk sew@sew-eurodrive.dk

Egypt

	Cairo	Copam Egypt for Engineering & Agencies 33 El Hegaz ST, Heliopolis, Cairo	Tel. (02) 2 56 62 99-2 41 06 39 Fax (02) 2 59 47 57-2 40 47 87

Estonia

Sales	***Tallin***	ALAS-KUUL AS Paldiski mnt.125 EE 0006 Tallin	Tel. 6 59 32 30 Fax 6 59 32 31

Finland

Assembly ***Sales*** ***Service***	***Lahti***	SEW-EURODRIVE OY Vesimäentie 4 FIN-15860 Hollola 2	Tel. (3) 589 300 Fax (3) 780 6211

France

Production ***Sales*** ***Service***	***Haguenau***	SEW-USOCOME SAS 48-54, route de Soufflenheim B. P. 185 F-67506 Haguenau Cedex	Tel. 03 88 73 67 00 Fax 03 88 73 66 00 http://www.usocome.com sew@usocome.com
Assembly ***Sales*** ***Service***	***Bordeaux***	SEW-USOCOME SAS Parc d'activités de Magellan 62, avenue de Magellan - B. P. 182 F-33607 Pessac Cedex	Tel. 05 57 26 39 00 Fax 05 57 26 39 09
	Lyon	SEW-USOCOME SAS Parc d'Affaires Roosevelt Rue Jacques Tati F-69120 Vaulx en Velin	Tel. 04 72 15 37 00 Fax 04 72 15 37 15
	Paris	SEW-USOCOME SAS Zone industrielle 2, rue Denis Papin F-77390 Verneuil l'Etang	Tel. 01 64 42 40 80 Fax 01 64 42 40 88

Gabon

Technical Office	***Libreville***	Electro-Services B.P. 1889 Libreville	Tel. 73 40 11 Fax 73 40 12

Germany

Headquarters ***Production*** ***Sales*** ***Service***	***Bruchsal***	SEW-EURODRIVE GmbH & Co Ernst-Blickle-Straße 42 D-76646 Bruchsal P.O. Box Postfach 3023 · D-76642 Bruchsal	Tel. (0 72 51) 75-0 Fax (0 72 51) 75-19 70 Telex 7 822 391 http://www.SEW-EURODRIVE.de sew@sew-eurodrive.de
Production	***Graben***	SEW-EURODRIVE GmbH & Co Ernst-Blickle-Straße 1 D-76676 Graben-Neudorf P.O. Box Postfach 1220 · D-76671 Graben-Neudorf	Tel. (0 72 51) 75-0 Fax (0 72 51) 75-29 70 Telex 7 822 276
Assembly ***Service***	***Garbsen*** ***(near Hannover)***	SEW-EURODRIVE GmbH & Co Alte Ricklinger Straße 40-42 D-30823 Garbsen P.O. Box Postfach 110453 · D-30804 Garbsen	Tel. (0 51 37) 87 98-30 Fax (0 51 37) 87 98-55
	Kirchheim ***(near München)***	SEW-EURODRIVE GmbH & Co Domagkstraße 5 D-85551 Kirchheim	Tel. (0 89) 90 95 52-10 Fax (0 89) 90 95 52-50
	Langenfeld ***(near Düsseldorf)***	SEW-EURODRIVE GmbH & Co Siemensstraße 1 D-40764 Langenfeld	Tel. (0 21 73) 85 07-30 Fax (0 21 73) 85 07-55

آتور صنعت ATOORSANAT SEW EURODRIVE

		Germany	
	Meerane (near Zwickau)	SEW-EURODRIVE GmbH & Co Dänkritzer Weg 1 D-08393 Meerane	Tel. (0 37 64) 76 06-0 Fax (0 37 64) 76 06-30
		Great Britain	
Assembly Sales Service	***Normanton***	SEW-EURODRIVE Ltd. Beckbridge Industrial Estate P.O. Box No.1 GB-Normanton, West- Yorkshire WF6 1QR	Tel. 19 24 89 38 55 Fax 19 24 89 37 02
		Greece	
Sales Service	***Athen***	Christ. Boznos & Son S.A. 12, Mavromichali Street P.O. Box 80136, GR-18545 Piraeus	Tel. 14 22 51 34 Fax 14 22 51 59 Boznos@otenet.gr
		Hong Kong	
Assembly Sales Service	***Hong Kong***	SEW-EURODRIVE LTD. Unit No. 801-806, 8th Floor Hong Leong Industrial Complex No. 4, Wang Kwong Road Kowloon, Hong Kong	Tel. 2-7 96 04 77 + 79 60 46 54Fax 2-7 95-91 29sew@sewhk.com
		Hungary	
Sales Service	***Budapest***	SEW-EURODRIVE Kft. H-1037 Budapest Kunigunda u. 18	Tel. +36 1 437 06 58 Fax +36 1 437 06 50
		Iceland	
	Hafnarfirdi	VARMAVERK ehf Dalshrauni 5 IS - 220 Hafnarfirdi	Tel. (354) 5 65 17 50 Fax (354) 5 65 19 51 varmaverk@varmaverk.is
		India	
Assembly Sales Service	***Baroda***	SEW-EURODRIVE India Pvt. Ltd. Plot No. 4, Gidc Por Ramangamdi · Baroda - 391 243 Gujarat	Tel. 0 265-83 10 86 Fax 0 265-83 10 87 sew.baroda@gecsl.com
		Indonesia	
Technical Office	***Jakarta***	SEW-EURODRIVE Pte Ltd. Jakarta Liaison Office, Fax (021) 536-36 86 Menara Graha Kencana Jl. Perjuangan No. 88, LT 3 B, Kebun Jeruk, Jakarta 11530	Tel. (021) 535-90 66/7
		Ireland	
Sales Service	***Dublin***	Alperton Engineering Ltd. 48 Moyle Road Dublin Industrial Estate Glasnevin, Dublin 11	Tel. (01) 8 30 62 77 Fax (01) 8 30 64 58
		Israel	
	Tel-Aviv	Liraz Handasa Ltd. 126 Petach-Tikva Rd. Tel-Aviv 67012	Tel. 03-6 24 04 06 Fax 03-6 24 04 02
		Italy	
Assembly Sales Service	***Milano***	SEW-EURODRIVE di R. Blickle & Co.s.a.s. Via Bernini,14 I-20020 Solaro (Milano)	Tel. (02) 96 98 01 Fax (02) 96 79 97 81
		Ivory Coast	
Technical Office	***Abidjan***	SICA Ste industrielle et commerciale pour l'Afrique 165, Bld de Marseille B.P. 2323, Abidjan 08	Tel. 25 79 44 Fax 25 84 36

آتور صنعت ATOORSANAT

		Japan	
Assembly ***Sales*** ***Service***	***Toyoda-cho***	SEW-EURODRIVE JAPAN CO., LTD 250-1, Shimoman-no, Fax (0 53 83) 7 3814 Toyoda-cho, Iwata gun Shizuoka prefecture, P.O. Box 438-0818	Tel. (0 53 83) 7 3811-13
		Korea	
Assembly ***Sales*** ***Service***	***Ansan-City***	SEW-EURODRIVE KOREA CO., LTD. B 601-4, Banweol Industrial Estate Unit 1048-4, Shingil-Dong Ansan 425-120	Tel. (031) 4 92-80 51 Fax (031) 4 92-80 56
		Lebanon	
Technical Office	***Beirut***	Gabriel Acar & Fils sarl B. P. 80484 Bourj Hammoud, Beirut	Tel. (01) 49 47 86 (01) 49 82 72 (03) 27 45 39 Fax (01) 49 49 71x Gacar@beirut.com
		Luxembourg	
Assembly ***Sales*** ***Service***	***Brüssel***	CARON-VECTOR S.A. Avenue Eiffel 5 B-1300 Wavre	Tel. (010) 23 13 11 Fax (010) 2313 36 http://www.caron-vector.be info@caron-vector.be
		Macedonia	
Sales	***Skopje***	SGS-Skopje / Macedonia “Teodosij Sinactaski” 6691000 Skopje / Macedonia	Tel. (0991) 38 43 90 Fax (0991) 38 43 90
		Malaysia	
Assembly ***Sales*** ***Service***	***Johore***	SEW-EURODRIVE SDN BHD No. 95, Jalan Seroja 39, Taman Johor Jaya 81000 Johor Bahru, Johor West Malaysia	Tel. (07) 3 54 57 07 + 3 54 94 09 Fax (07) 3 5414 04
		Mexico	
	Tultitlan	SEW-EURODRIVE, Sales and Distribution, S.A.de C.V. Boulevard Tultitlan Oriente #2 “G” Colonia Ex-Rancho de Santiaguito Tultitlan, Estado de México, México 54900	Tel. 52 55 5888 2976 Fax 52 55 5888 2977 scmexico@seweurodrive.com.mx
		Morocco	
	Casablanca	S. R. M. Société de Réalisations Mécaniques 5, rue Emir Abdelkader 05 Casablanca	Tel. (02) 61 86 69/61 86 70/61 86 71 Fax (02) 62 15 88 SRM@marocnet.net.ma
		Netherlands	
Assembly ***Sales*** ***Service***	***Rotterdam***	VECTOR Aandrijftechniek B.V. Industrieweg 175 NL-3044 AS Rotterdam Postbus 10085 NL-3004AB Rotterdam	Tel. (010) 4 46 37 00 Fax (010) 4 15 55 52
		New Zealand	
Assembly ***Sales*** ***Service***	***Auckland***	SEW-EURODRIVE NEW ZEALAND LTD. P.O. Box 58-428 82 Greenmount drive East Tamaki Auckland	Tel. 0064-9-2 74 56 27 Fax 0064-9-2 74 01 65 sales@sew-eurodrive.co.nz
	Christchurch	SEW-EURODRIVE NEW ZEALAND LTD. 10 Settlers Crescent, Ferrymead Christchurch	Tel. (09) 3 84 62 51 Fax (09) 3 84 64 55 sales@sew-eurodrive.co.nz
		Norway	
Assembly ***Sales*** ***Service***	***Moss***	SEW-EURODRIVE A/S Solgaard skog 71 N-1599 Moss	Tel. (69) 2410 20 Fax (69) 2410 40 sew@sew-eurodrive.no

آتور صنعت ATOORSANAT

آتور صنعت ATOORSANAT SEW EURODRIVE

		Pakistan	
Technical Office	***Karachi***	SEW-EURODRIVE Pte. Ltd. Karachi Liaison Office A/3,1 st Floor, Central Commercial Area Sultan Ahmed Shah Road Block7/8, K.C.H.S. Union Ltd., Karachi	Tel. 92-21-43 93 69 Telex 92-21-43 73 65
		Paraguay	
	Asunción	EQUIS S. R. L. Avda. Madame Lynchy y Sucre Asunción	Tel. (021) 67 21 48 Fax (021) 67 21 50
		Peru	
Assembly ***Sales*** ***Service***	***Lima***	SEW DEL PERU MOTORES REDUCTORES S.A.C. Los Calderos # 120-124 Urbanizacion Industrial Vulcano, ATE, Lima	Tel. (511) 349-52 80 Fax (511) 349-30 02 sewperu@terra.com.pe
		Philippines	
Technical Office	***Manila***	SEW-EURODRIVE Pte Ltd Manila Liaison Office Suite 110, Ground Floor Comfoods Building Senator Gil Puyat Avenue 1200 Makati City	Tel. 0 06 32-8 94 27 52 54 Fax 0 06 32-8 94 27 44 sewmla@i-next.net
		Poland	
Sales	***Lodz***	SEW-EURODRIVE Polska Sp.z.o.o. ul. Pojezierska 63 91-338 Lodz	Tel. (042) 6 16 22 00 Fax (042) 6 16 22 10 sew@sew-eurodrive.pl
		Portugal	
Assembly ***Sales*** ***Service***	***Coimbra***	SEW-EURODRIVE, LDA. Apartado 15 P-3050-901 Mealhada	Tel. (0231) 20 96 70 Fax (0231) 20 36 85 infosew@sew-eurodrive.pt
		Romania	
Sales ***Service***	***Bucuresti***	Sialco Trading SRL str. Madrid nr.4 71222 Bucuresti	Tel. (01) 2 30 13 28 Fax (01) 2 30 71 70 sialco@mediasat.ro
		Russia	
Sales	***St. Petersburg***	ZAO SEW-EURODRIVE P.O. Box 193 193015 St. Petersburg	Tel. (812) 3 26 09 41 + 5 35 04 30 Fax (812) 5 35 22 87 sewrus@post.spbnit.ru
		Senegal	
	Dakar	SENEMECA Mécanique Générale Km 8, Route de Rufisque B.P. 3251, Dakar	Tel. 22 24 55 Fax 22 79 06 Telex 21521
		Singapore	
Assembly ***Sales*** ***Service***		SEW-EURODRIVE PTE. LTD. No 9, Tuas Drive 2 Jurong Industrial Estate Singapore 638644	Tel. 8 62 17 01-705 Fax 8 61 28 27 Telex 38 659
		Slovenia	
Sales ***Service***	***Celje***	Pakman - Pogonska Tehnika d.o.o. Ul. XIV. divizije 14 SLO - 3000 Celje	Tel. 00386 3 490 83 20 Fax 00386 3 490 83 21 pakman@siol.net
		South Africa	
Assembly ***Sales*** ***Service***	***Johannesburg***	SEW-EURODRIVE (PROPRIETARY) LIMITED Eurodrive House Cnr. Adcock Ingram and Aerodrome Roads Aeroton Ext. 2 Johannesburg 2013 P.O.Box 90004 Bertsham 2013	Tel. + 27 11 248 70 00 Fax +27 11 494 23 11

آتور صنعت ATOORSANAT

		South Africa	
	Capetown	SEW-EURODRIVE (PROPRIETARY) LIMITED Rainbow Park Cnr. Racecourse & Omuramba Road Montague Gardens, 7441 Cape Town P.O.Box 53 573 Racecourse Park, 7441 Cape Town	Tel. +27 21 552 98 20 Fax +27 21 552 98 30 Telex 576 062
	Durban	SEW-EURODRIVE (PROPRIETARY) LIMITED 2 Monaceo Place Pinetown Durban P.O. Box 10433, Ashwood 3605	Tel. +27 31 700 34 51 Fax +27 31 700 38 47
		Spain	
Assembly ***Sales*** ***Service***	***Bilbao***	SEW-EURODRIVE ESPAÑA, S.L. Parque Tecnológico, Edificio, 302 E-48170 Zamudio (Vizcaya)	Tel. 9 44 31 84 70 Fax 9 44 31 84 71 sew.spain@sew-eurodrive.es
		Sri Lanka	
	Colombo 4	SM International (Pte) Ltd 254, Galle Raod Colombo 4, Sri Lanka	Tel. 941-59 79 49 Fax 941-58 29 81
		Sweden	
Assembly ***Sales*** ***Service***	***Jönköping***	SEW-EURODRIVE AB Gnejsvägen 6-8 S-55303 Jönköping Box 3100 S-55003 Jönköping	Tel. (036) 34 42 00 Fax (036) 34 42 80 www.sew-eurodrive.se
		Switzerland	
Assembly ***Sales*** ***Service***	***Basel***	Alfred Imhof A.G. Jurastrasse 10 CH-4142 Münchenstein bei Basel	Tel. (061) 4 17 17 17 Fax (061) 4 17 17 00 http://www.imhof-sew.ch
		Taiwan (R.O.C.)	
	Nan Tou	Ting Shou Trading Co., Ltd. No. 55 Kung Yeh N. Road Industrial District Nan Tou 540	Tel. 00886-49-255-353 Fax 00886-49-257-878
		Thailand	
Assembly ***Sales*** ***Service***	***Chon Buri***	SEW-EURODRIVE (Thailand) Ltd. Bangpakong Industrial Park 2 700/456, Moo.7, Tambol Donhuaroh Muang District Chon Buri 20000	Tel. 0066-38 21 40 22 Fax 0066-38 21 45 31
		Tunisia	
	Tunis	T. M.S. Technic Marketing Service 7, rue Ibn El Heithem Z.I. SMMT 2014 Mégrine Erriadh	Tel. (1) 43 40 64 + 43 20 29 Fax (1) 43 29 76
		Turkey	
Assembly ***Sales*** ***Service***	***Istanbul***	SEW-EURODRIVE Hareket Sistemleri San. ve Tic. Ltd. Sti Bagdat Cad. Koruma Cikmazi No. 3 TR-81540 Maltepe ISTANBUL	Tel. (0216) 4 41 91 63 + 4 41 91 64 + 3 83 80 14 + 3 83 80 15 Fax (0216) 3 05 58 67 seweurodrive@superonline.com.tr
		Uruguay	
	Montevideo	SEW-EURODRIVE S. A. Sucursal Uruguay German Barbato 1526 CP 11200 Montevideo	Tel. 0059 82 9018 189 Fax 0059 82 9018 188 sewuy@sew-eurodrive.com.uy
		Venezuela	
Assembly ***Sales*** ***Service***	***Valencia***	SEW-EURODRIVE Venezuela S.A. Av. Norte Sur No. 3, Galpon 84-319 Zona Industrial Municipal Norte Valencia	Tel. +58 (241) 8 32 98 04 Fax +58 (241) 8 38 62 75 sewventas@cantr.net sewfinanzas@cantr.net

آتور صنعت ATOORSANAT

آتور صنعت ATOORSANAT SEW EURODRIVE

Notes

آتور صنعت
ATOORSANAT

SEW-Eurodrive, Inc.
Terms and Conditions of Sale

1. GENERAL

All orders for products and drawings furnished in connection therewith (hereinafter collectively called "products") manufactured or supplied by SEW?Eurodrive, Inc. ("Eurodrive"), shall be subject to these terms and conditions of sale. No modifications or additions hereto will be binding unless agreed to in writing by an authorized officer of Eurodrive.

2. QUOTATIONS

Price quotations by Eurodrive are subject to change without notice. All products sold are subject to price in effect at time of shipment.

3. TAXES

Prices do not include Sales, Use, Excise, or other taxes payable to any governmental authority in respect of the sale of Eurodrive's products. The purchaser shall pay the amount of any such taxes or shall reimburse Eurodrive for the amount thereof that Eurodrive may be required to pay.

4. PAYMENTS

Unless otherwise provided, terms of payment are 30 days net from date of invoice for purchasers whose credit is approved. Eurodrive reserves the right to charge interest on any balance outstanding at 2% per month (or fraction thereof) or as Eurodrive shall determine, up to the maximum rate allowed by law, from the date payment is due to the date payment is actually received. Pro rata payments shall become due as shipments are made. If shipments are delayed by or at the request of the purchaser, payment shall become due when Eurodrive is prepared to make shipment. If the cost to Eurodrive of products is increased by reason of delays caused by the purchaser, such additional cost incurred by Eurodrive shall be paid by the purchaser. Eurodrive may, if it deems itself insecure by reason of the financial condition of purchaser or otherwise, require full or partial payment in advance and as a condition to the continuance of production or shipment on the terms specified herein.

5. ACCEPTANCE

No order or other offer shall be binding upon Eurodrive until accepted in writing by an authorized officer of Eurodrive.

6. CHANGES

Eurodrive will not accept changes in specification unless such changes are requested in writing and agreed to in writing by an authorized officer of Eurodrive and the purchaser agrees to pay, if necessary, in addition to the original purchase price a sum so set by Eurodrive.

7. CANCELLATION

Any order when placed with and accepted by Eurodrive is not subject to cancellation unless agreed to in writing by an authorized officer of Eurodrive. Cancellations are subject to reasonable charges based upon expenses already incurred and commitments made by Eurodrive.

8. DELIVERY

Any indicated dates of delivery are approximate only, but Eurodrive will attempt to meet them where possible. Eurodrive shall not be liable for delays in manufacturing or delivery or failure to manufacture or deliver due to any event in the nature of force majeure or any cause beyond Eurodrive's reasonable control. Eurodrive will not be bound by any penalty clause contained in any specification or order submitted by the purchaser unless such clause is agreed to in writing by an authorized officer of Eurodrive. Delivery of products shall be made FOB Eurodrive's factory unless otherwise agreed to in writing by authorized officer of Eurodrive.

9. PATENTS

Eurodrive shall indemnify and hold harmless the purchaser against all claims or actions that are instituted against the purchaser on the grounds that the purchaser has infringed the patent rights of others by using, reselling, or promoting the sale or resale of Eurodrive's products, provided that Eurodrive shall not be obligated hereunder if:

a) The purchaser fails to give Eurodrive prompt notice of any such claim or actions, or
b) Such claims or actions against the purchaser are based wholly or in part on the existence or operation of any complete installation or apparatus incorporating Eurodrive's products as components and which is designed or manufactured by the purchaser or its customers.

10. REGULATORY LAWS OR STANDARDS

Eurodrive makes no representation that its products conform to state or local laws, ordinances, regulations, codes or standards except as may be otherwise agreed to in writing by an authorized officer of Eurodrive.

11. LIMITED WARRANTY

Eurodrive warrants all its products against defects in material and workmanship for a period of one (1) year from the date the product is placed in service to a maximum of eighteen (18) months from date of shipment. Parts subject to replacement due to operational wear and tear, viz. Varigear® belts and Varimot® traction elements, are not covered by this Limited Warranty.

Notwithstanding the foregoing, any equipment or components of the products not of Eurodrive's own manufacture and/or specified by the purchaser is sold under only such warranty as the maker thereof gives Eurodrive and Eurodrive is able to enforce, but such items are not warranted by Eurodrive in any way. Use of products above rated capacity, misuse, field alterations of products, damage due to lack of maintenance or improper storage, neglect or accident are also excluded from this Limited Warranty.

This Limited Warranty is effective provided:

a) The purchaser notifies Eurodrive in writing of the alleged defect immediately after it becomes known to the purchaser; and
b) no alterations, repairs, or services have been performed by the purchaser or third parties on the products without written approval of an authorized officer of Eurodrive.

Eurodrive's obligation under this Limited Warranty is limited to the repair or replacement FOB Eurodrive's factory or any part or parts found to be defective in material or workmanship.

Eurodrive shall, in no event, be liable to the user/purchaser under this Limited Warranty, or otherwise, for claims, expenditures or losses arising from operational delays or work stoppages or damages to property or people caused by defective products or for consequential or indirect damage of any nature whatsoever.

THIS LIMITED WARRANTY IS IN LIEU OF ALL OTHER EXPRESS OR IMPLIED WARRANTIES INCLUDING ANY WARRANTY OF MERCHANTABILITY OR FITNESS FOR ANY PARTICULAR PURPOSE.

12. ASSIGNMENT

No contract to purchase goods from Eurodrive may be assigned by the purchaser without prior agreement in writing by an authorized officer of Eurodrive.

13. SECURITY INTEREST

Unless and until the products are fully paid for, Eurodrive reserves a security interest in them to secure the unpaid balance of the price and all other obligations of the purchaser to Eurodrive however arising. The purchaser hereby grants Eurodrive a power of attorney to execute and file on behalf of purchaser all necessary financing statements and other similar documents required to protect the security interest granted herein.

14. DAMAGES; LIMITATION

In the event of breach of this agreement by Eurodrive, the rights of the purchaser are limited to the amount therefore paid to Eurodrive for the goods. THE PURCHASER SHALL HAVE NO RIGHT TO CONSEQUENTIAL OR INDIRECT DAMAGES, WHETHER FOR INJURES TO PERSON, PROPERTY OR OTHERWISE.

15. DEFAULT

If the purchaser defaults in performing any of its obligations to Eurodrive under this agreement, or any other agreements, Eurodrive may, at its option and without incurring any liability thereby, elect to terminate this agreement or to terminate any or all other agreements with the purchaser or to terminate this agreement together with any or all such other agreements. Furthermore, Eurodrive shall have a right to all damages sustained, including loss of profits.

16. INSOLVENCY

If the purchaser shall be insolvent or cease doing business or be the subject of any proceedings under any bankruptcy, insolvency, reorganization or arrangement statute or law, such act shall at the option of Eurodrive, be deemed a default under this agreement, and Eurodrive may elect to cease performing and cancel this agreement with respect to any products not delivered or received prior to the election. All of the foregoing shall be without prejudice to recovery by Eurodrive of damages for work performed and for loss of profits and material and products delivered.

17. MISCELLANEOUS

The provisions of this agreement shall be governed and construed in accordance with the laws of the State of South Carolina. These terms and conditions set forth the entire understanding and agreement of the parties hereto in respect to the subject matter hereof, and all prior undertakings between the parties hereto, together with all representations and obligations of such parties in respect to such subject matter, shall be superseded by and merged into this agreement. No provisions hereof shall be waived, changed, terminated, modified, discharged or rescinded, orally or otherwise, except by a writing signed by the party to be charged by any such waiver, change, termination, modification, discharge, or rescission. No waiver of any breach of any provision of this agreement shall constitute an amendment or modification of this agreement, or any provision thereof. If any provision of this agreement shall be held to be unenforceable or inapplicable in any way or respect, such holding shall not affect the enforceability of any other provision of this agreement under any other circumstances. The provisions of this agreement shall bind and inure to the benefits of the parties hereto and their respective heirs, executors, administrators, successors, and (subject to any restrictions on assignment hereinabove set forth) assigns. In the event unspecified redress or commitments develop not covered above, terms of the Uniform Commercial Code under the laws of South Carolina will be construed as being effective as they may pertain.

آتور صنعت ATOORSANAT
SEW EURODRIVE

United States

Midwest Region Assembly Center
SEW-Eurodrive, Inc.
Troy, OH
Tel: (937) 335-0036
Fax: (937) 222-4104
E-mail: cstroy@seweurodrive.com

Northeast Region Assembly Center
SEW-Eurodrive, Inc.
Bridgeport, NJ
Tel: (856) 467-2277
Fax: (856) 845-3179
E-mail: csbridgeport@seweurodrive.com

Southeast Region Assembly Center
SEW-Eurodrive, Inc.
Lyman, SC
Tel: (864) 439-7537
Fax: (864) 439-7830
E-mail: cslyman@seweurodrive.com

Southwest Region Assembly Center
SEW-Eurodrive, Inc.
Dallas, TX
Tel: (214) 330-4824
Fax: (214) 330-4724
E-mail: csdallas@seweurodrive.com

Western Region Assembly Center
SEW-Eurodrive, Inc.
Hayward, CA
Tel: (510) 487-3560
Fax: (510) 487-6381
E-mail: cshayward@seweurodrive.com

Manufacturing Facility
& Corporate Offices
SEW-Eurodrive, Inc.
Lyman, SC
Tel: (864) 439-8792
Fax: (864) 949-3039

Canada

Western Region
SEW-Eurodrive Co. of Canada Ltd.
Delta, B.C.
Tel: (604) 946-5535
Fax: (604) 946-2513
E-mail: marketing@sew-eurodrive.ca

Central Region
SEW-Eurodrive Co. of Canada Ltd.
Bramalea, ON
Tel: (905) 791-1553
Fax: (905) 791-2999
E-mail: marketing@sew-eurodrive.ca

Eastern Region
SEW-Eurodrive Co. of Canada Ltd.
LaSalle, PQ
Tel: (514) 367-1124
Fax: (514) 367-3677
E-mail: marketing@sew-eurodrive.ca

SEW EURODRIVE

www.seweurodrive.com (USA)
www.sew-eurodrive.ca (Canada)

آتور صنعت
ATOORSANAT

Printed in USA
9PD0008/2002