MOTORS AND DRIVES

آتور صنعت
ATOORSANAT

LOW VOLTAGE MOTORS FOR HAZARDOUS **LOCATIONS**

EEx d - Explosion Proof Multivoltage Motors
EEx de - Explosion Proof Multivoltage Motors With Increased Safety Terminal Box
EEx e - Increased Safety Multivoltage Motors
EEx nA - Non Sparking Multivoltage Motors

QUALITY SYSTEM ISO 9001 WEG MOTORES

آتور صنعت
ATOORSANAT

ELECTRONIC CATALOG

The WEG Electronic Catalogue available on CD ROM is the world's leading motor selection program. Designed with today's engineer in mind, this excellent, easy to use tool provides the user with the facility to select and generate motor data sheets, performance curves and dimensional drawings.

Some 35000 motor variations, covering all world markets as well as most of WEG's wide range can be accessed from the CD ROM catalogue.

Additionally, the electrical and mechanical application programs allow the user to calculate run-up times, bearing lifetime and motor selection suitability.

The WEG group's corporate information is also available fron the catalogue as well as the details and addresses of all WEG's worldwide Branch offices, Representatives and Service Network.

The electronic catalogue can be down loaded from our website at http://www.weg.com.br or the CD ROM can be obtained from any one of our Branches or Representatives.

آتور صنعت
ATOORSANAT

آتور صنعت
ATOORSANAT

TABLE OF CONTENTS

TECHNICAL INFORMATION

1 Explosive atmospheres 04
2 European Standards for explosive atmosphere designed motors 04
2.1 IEC Standards 04
2.2 CENELEC Standards 05
2.3 ATEX Directive 05
3 Classes of Temperature 05
4 Protection categories for electric motors 06
4.1 Type EEx d – Explosion Proof 06
4.2 Type EEx de – Explosion Proof with Increased Safety Terminal Box 06
4.3 Type EEx e – Increased Safety 06
4.3.1 Time t_E 07
4.4 Type EEx n – Non sparking 07
5 General information 08
6 WEG Motors nameplate identification 08

WEG MOTORS GENERAL FEATURES

EEx d - Explosion Proof Multivoltage Motors and EEx de - Explosion Proof Multivoltage Motors with Increased Safety Terminal Box 09
EEx e – Increased Safety Multivoltage Motors 17
EEx nA – Non Sparking Multivoltage Motors 19

WEG MOTORS ELECTRICAL FEATURES

EEx d - Explosion Proof Multivoltage Motors and EEx de - Explosion Proof Multivoltage Motors with Increased Safety Terminal Box 10
EEx e – Increased Safety Multivoltage Motors 18
EEx nA – Non Sparking Multivoltage Motors 20

WEG MOTORS MECHANICAL FEATURES

EEx d - Explosion Proof Multivoltage Motors and EEx de - Explosion Proof Multivoltage Motors with Increased Safety Terminal Box 30
EEx e – Increased Safety Multivoltage Motors and EEx nA – Non Sparking Multivoltage Motors 32

1 EXPLOSIVE ATMOSPHERE

An atmosphere is considered as explosive when the amount of gas, vapor, dust or fibers is such that a spark originated from an electric circuit or an overheating from an equipment may cause an explosion.

In reference to surrounding equipment, preventive constructive measures are taken so as to avoid that the area around them is flamed.

2 EUROPEAN STANDARDS FOR EXPLOSIVE ATMOSPHERE DESIGNED MOTORS

In Europe, all motors designed for explosive atmospheres must meet IEC and CENELEC Standards and ATEX Directive 94/9/EC, which will be mandatory from July 2003 onwards.

2.1 IEC STANDARDS

The IEC Standard classifies the risk areas into zones and groups:

- *The zones are classified according to frequency and period of time that the explosive atmosphere is present.*
- *The division into groups is based on the aggressiveness of the environment.*

Zone classification:

Gases and Vapours	Zone 0	*Environment where the explosive atmosphere is present continuously or for long periods of time.*
	Zone 1	*Environment where the probability of existing an explosive atmosphere is associated with normal operation of the equipment.*
	Zone 2	*Environment where an explosive atmosphere will probably not be present under normal operating conditions and, if any, this will be for short period of time.*
Dusts	Zone 20	*Environment where flammable dust is present continuously or frequently under normal operating conditions in enough amount to generate an explosive concentration of mixed dust with air and/or areas where may occur excessive amount of dust with no further control.*
	Zone 21	*Area that is not classified as Zone 20. However, where flammable dusts may occur under normal operating conditions in enough amount to generate an explosive concentration of dust mixed with the air.*
	Zone 22	*Areas that are not classified as Zone 21. However, where flammable dust may occur frequently and is present for shots periods of time, or where the amount of dust may occur just under abnormal operating conditions causing an explosive mixture.*

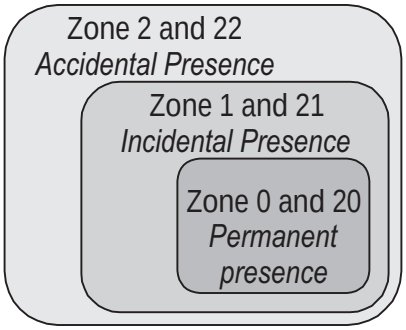

Group classification:

GROUPS	Mines	*Equipment manufactured for under ground operation mines*	I	*Methane may be present (grisu)*
	Other Explosive Atmospheres	*Equipment manufactured for other types industry (surface industry), being subdivided based on the characteristics of the materials present*	IIA	*acetone, ammonia, benzene, butane, butanol, alcohol butylic, ethane, ethanol, acetate of ethyl, gasoline, hepthanes, hexanes, natural gas, methanol, naphtha, propane, propanol, toluene, esthirene, solvents in general*
			IIB	*acetaldeide, cyclopropane, diethylic ether, ethene, monoxide of carbon*
			IIC	*acetylene, butadiene, oxide of ethene, hydrogen, oxide of propylene, gases containing over 30% of hydrogen*

آتور صنعت
ATOORSANAT

2.2 CENELEC STANDARDS

CENELEC Standard provides criteria to determine the classification of the equipment into groups and categories:

Group classification:

GROUP I (Mines)	
Categories	
M1	*Equipment designed to operate on environments where the explosive atmosphere is present frequently*
M2	*Equipment that must be powered off if there is any risk of explosion. Explosive atmosphere is present frequently.*

Category classification:

GROUP II* (Surface Industry)			
Categories			Zone
1	*Equipment with high level of protection. Explosive atmosphere is present continuously or for long periods of time*	*1G (gas) 1D (dust)*	*0 (gas) 20 (dust)*
2	*Equipment with high level of protection. Explosive atmosphere may occur occasionally.*	*2G (gas) 2D (dust)*	*1 (gas) 21 (dust)*
3	*Equipment with normal level of protection. The explosive atmosphere will probably not occur.*	*3G (gas) 3D (dust)*	*2 (gas) 22 (dust)*

** Gases are subdivided into IIA, IIB and IIC, as per IEC Standards.*

2.3 ATEX DIRECTIVE 94/9/EC

Valid since March of 1996, this European Directive will be mandatory from July 2003. If provides a classification for motors into areas containing explosive atmospheres. More than product specification, the present Directive gives special attention to the production process including design, production itself and sale.

The certification for the system is provided together with the product certification. ATEX Directive 94/9/EC also classifies the equipment to operate on explosive atmospheres into groups and categories following the same classification bases used by CENELEC.

3 CLASSES OF TEMPERATURE

The minimum temperature causing an explosion of a gas, vapour of explosive mixture is called ignition temperature. To avoid any risk of explosion, motor surface temperature must always stay below the ignition temperature of the explosive mixture.

The internal and external temperature of the electrical equipment must be strictly followed to avoid ignition of an explosive mixture. So the equipment is classified into classes of temperature, as per table below:

Class of Temperature (ºC)	*Maximum motor surface temperature (ºC)*	*Ignition temperature of the explosive mixture (ºC)*
IEC / CENELEC		
T1	*450*	*>450*
T2	*300*	*>300*
T3	*200*	*>200*
T4	*135*	*>135*
T5	*100*	*>100*
T6	*85*	*>85*

4 PROTECTION CATEGORIES FOR ELECTRIC MOTORS

4.1 TYPE EEx d – EXPLOSION PROOF

It is a type of protection where the parts that may flame an explosive atmosphere are closed into enclosures which are capable to withstand a pressure during an internal explosion of an explosive mixture and it avoids such explosion to go out from this enclosure to an external explosive atmosphere.

An induction electric motor (of any protection) is not totally sealed, that is, air goes in and out. While in operation, it becomes heated up and the internal air gets to a higher pressure compared to the external pressure (air is blown out): when motor is switched - off, the internal pressure decreases, allowing in this way entrance of air (which in this case is contaminated).

The motor surfaces do not need to be totally enclosed to avoid flame propagation. The minimum opening required to avoid passage of flames depends on the gas or vapour that is present.

Therefore, there will always be flame passages on the motor. The safety level on an explosion proof motor is on the fact that it must ensure that all flame passages never exceed the standardized dimensions that the motor is physically suitable to withstand an internal explosion without transmitting to the external environment.

EEx d protection will not allow that an internal explosion propagates to the external environment. To ensure safety to the system, WEG provides a control of the openings and the finishing of joints once these are responsible for the volume of gases exchanged between inside and outside of the motor.

The main characteristics of EEx d motors are as follows:

- *Reinforced frame, terminal box and endbells*
- *Greater contact surface between motor components*
- *Reduced clearance between motor shaft and bearing cap to avoid transmission of sparks and the external environment*
- *Water pressure test on all components (frames, endbells, terminalbox, terminal box covers)*

Application:

Environments containing flammable gases or vapour continuously, intermittently or periodically in enough amount to generate explosive or flammable mixtures arising out of repairs or maintenance services.

The most common locations of Zone 1 and 2, group IIA and IIB are those where the following gases are found present: oil, naphtha, benzene, ammonia, propane, diethylic ether, acetone, alcohol, industrial methane, natural gas.

The main applications include fans, blowers, crushers, conveyor systems, mills, cranes and other applications located in areas that require explosion proof motors.

4.2 TYPE EEx de – EXPLOSION PROOF WITH INCREASED SAFETY TERMINAL BOX

EEx de motors differ from EEx d motors only on the configuration of terminals and terminal box. The terminal box with increased safety terminal block prevents from any ignition source that may occur such as sparks, excessive heating, etc.

The main characteristics of EEx de motors are:

- *Terminal box components as well as connection cables must be firmly fastened (without allowing any movement)*
- *Special terminal block to avoid arcs and sparks and standardized distance between terminals (increased safety terminal block)*
- *Double grounding must be provided (one on the foot and the other on terminal box covers)*

Application:

Same as described for EEx d motors.

4.3 TYPE EEx e – INCREASED SAFETY

This is an electric equipment which under normal operating conditions will not cause arcs, sparks or overheating enough to cause ignition of an explosive atmosphere which it has been designed to. These motors are similar to standard motors. However, they are fitted with special features as follows:

- *Temperature rise 10K below the maximum temperature allowed for the insulation class*
- *Commitment with "time t_E" (maximum time for switching off through protection device)*
- *Terminal box components as well as connection cables must be firmly fastened (without allowing any movement)*
- *External grounding on the frame is mandatory*
- *Frame grounding must be connected with terminal box grounding*
- *Drip cover must be applied on vertical applications*
- *Reduced output x frame ratio*
- *Special care when manufacturing the winding along with applying double impregnation layer*
- *Special terminal block to avoid arcs and sparks and standardized distance between terminals (increased safety terminal block)*
- *Drain holes on endbells*

4.3.1 TIME t_E

It is the time required for the motor winding, when starting current goes through it, to reach the limit temperature, starting from the achieved temperature under normal service duty and considering the ambient temperature on its maximum value.

The protection device must be designed so as to avoid any risk under all operating conditions. This protection device must operate, without fault, not only on overload cases, but also on locked rotor conditions. On this way, the value of time t_E must be such that, when rotor is locked, motor must be switched off by a protection device that depends on the current, before time t_E gets to the end.

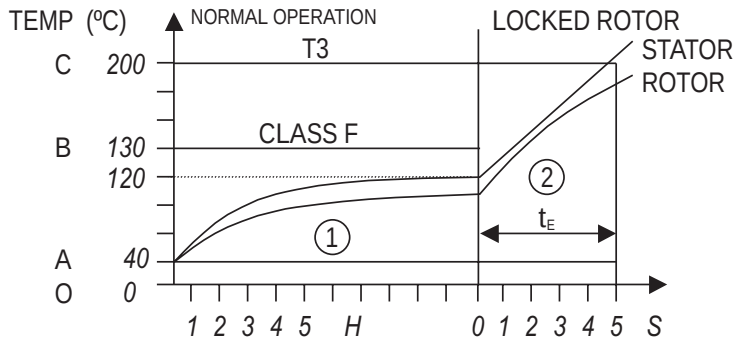

On the chart above, the interval OA represents the maximum ambient temperature, and OB is the temperature reached under normal operating duty. In case there is any failure with further rotor locking, the condition is represented on the interval 2 of the chart. The motor temperature increases fastly up to interval OC which must be shorter than motor classification temperature T. So care must be taken to ensure motor is switched-off within time t_E.

Application:

Environments where the probability of existing an explosive atmosphere is associated with normal operation of the equipment in amount enough to cause an explosion.

The environments are classified as Zone 1 and 2, groups IIA, IIB and IIC. The most common gases included in this classification are: acetone, ammonia, benzene, butane, butanol, buthylic alcohol, ethane, ethanol, acetate of ethyl, gasoline, heptanes, hexanes, natural gas, methanol, oil naphtha, propane, propanol, toluene, esthirene, solvents in general, acetaldehyde, cyclopropane, diethylic ether, ethane, monoxide of carbon, acetylene, butadiene, oxide of ethane, hydrogen, oxide of propylene and gases containing over 30% of hydrogen.

4.4 TYPE EEx n – NON SPARKING

This type of protection is applied to electric equipment which do not cause ignition of an explosive atmosphere under normal operating conditions.

The EEx n motor is built identically to a normal TEFC motor, with the following characteristics:

- *Terminal box components as well as connection cables must be firmly fastened (without allowing any movement)*
- *Increased safety terminal block to avoid arcs and sparks, along with standardized distance between terminals*

Application:

Environment where an explosive atmosphere will probably not be present under normal operating conditions and, if any, this will be for short period of time, that is, an explosive atmosphere may be present accidentally.

The environments are classified as Zone 2, groups IIA, IIB and IIC. The most common gases included in this classification are: acetone, ammonia, benzene, butane, butanol, buthylic alcohol, ethane, ethanol, acetate of ethyl, gasoline, heptanes, hexanes, natural gas, methanol, oil naphtha, propane, propanol, toluene, esthyrene, solvents in general, acetaldehyde, cyclopropane, diethylic ether, ethane, monoxide of carbon, acetylene, butadiene, oxide of ethane, hydrogen, oxide of propylene and gases containing over 30% of hydrogen.

آتور صنعت
ATOORSANAT

5 GENERAL INFORMATION

Type of Protection	Type EEx d	Type EEx de	Type EEx e	Type EEx n
Designation	*Explosion Proof*	*Explosion Proof with Increased Safety Terminal Box*	*Increased Safety*	*Non sparking*
Objective	*Keep an internal explosion not allowing to propagate to the external environment*	*Explosion not allowing to propagate to the external environment, with special attention to terminal box*	*Ensure non occurrence of arcs or sparks under normal operation or on starting*	*Ensure non occurrence of arcs or sparks under normal operation*
Time t_E	*Not applied*	*Not applied*	*Applied*	*Not applied*
Construction	*Rugged frame*	*Rugged frame, with special characteristics on the terminal box*	*Similar to standard motor, with special characteristics on the terminal box*	*Similar to standard motor, with special characteristics on the terminal box*
Output/frame ratio	*Standard*	*Standard*	*Reduced*	*Standard*
Terminal box	*Explosion Proof*	*Explosion proof with increased safety terminal block*	*Increased safety terminal block*	*Increased safety terminal block*

6 WEG MOTORS NAMEPLATE IDENTIFICATION

- *Type EEx d – Explosion Proof*

CE 0102 Ex II 2 G EEx d II B T4 CESI 01 ATEX XXXX

- *Type EEx de – Explosion Proof with Increased Safety Terminal Box*

CE 0102 Ex II 2 G EEx de II B T4 CESI 01 ATEX XXXX

- *Type EEx e – Increased Safety*

CE 0102 Ex II 2 G EEx e II T1,T2,T3,T4 PTB 01 ATEX XXXX

- *Type EEx nA – Non Sparking*

CE Ex II 3 G EEx nA II T3

Caption:

Identification code of the notified body
Group for the equipment
Category for the equipment
Gas
Type of protection against explosion
Group for the equipment
Gas subdivision
Class of Temperature
Certifying Entity
Year
ATEX Directive
Certificate Number

Note: For EEx nA motors, the letter A means that all motor's components are non-sparking.

EEx d – Explosion Proof Multivoltage Motors
EEx de – Explosion Proof Multivoltage Motors with Increased Safety Terminal Box

STANDARD FEATURES

- *Three phase, Multivoltage, 50Hz or 60Hz*
- *Cast iron frame: 90S/L up to 355M/L*
- *Output range: from 0,37 to 315kW (II, IV, VI and VIII poles)*
- *Class of temperature T4 (with inverter application T3)*
- *Class "F" insulation with △T 80K*
- *Design N*
- *Thermistors 155ºC - 1 per phase*
- *Squirrel cage rotor (aluminium die cast)*
- *Degree of protection IP55*
- *Six lead terminal block (for EEx d motors)*
- *Increased safety terminal box (for EEx de motors)*
- *Lip Seal*
- *Hardened set screws*
- *Internal DE and NDE bearing cap to prevent flame propagation*
- *Machined metal to metal surfaces between frame and terminal box*
- *Earth lug inside the terminal box*
- *Stainless steel nameplate identifying: standards, classification, temperature code, certification number*
- *Epoxy based paint plan RAL 5010*

ACCORDING TO ATEX DIRECTIVE - PTB

OPTIONAL FEATURES

- *Space heaters*
- *Epoxy resin impregnation*
- *Thermostats*
- *Other paint options*

CLASSIFICATION

IEC Standard:	*CENELEC Standard:*
Zone 1; Group IIB	*Group IIB; Category 2*

Note: The classification in Zone 1 means that the motor is suitable to operate also in Zone 2 once Zone 1 represents an operating condition worse than Zone 2. The same applies to Groups and Categories: EEx d and EEx de motors are suitable to operate also in Group IIA and Category 3.

CERTIFICATION

In Europe, WEG explosion proof motors meet ATEX Directive 94/9/EC certified by PTB and product certified by CESI – Centro Elettrotecnico Sperimentale Italiano S.P.A. The CESI certificates of conformity for explosion proof in flameproof enclosure "d" and "de" as per EN50014 / EN50018 are:

EEx d – Explosion proof motors (class of temperature T4)
EEx de – Explosion proof motors with increased safety terminal box (class of temperature T4)

Frames	Certificate number
90-100	*CESI 01 ATEX 096*
112-132	*CESI 01 ATEX 097*
160-200	*CESI 01 ATEX 098*
225-250	*CESI 01 ATEX 099*
280-315	*CESI 01 ATEX 100*
355	*CESI 01 ATEX 101*

CESI ITALY | UL USA | CSA CANADA | QUALITY ASSURANCE SERVICES Standards Austrália AUSTRALIA | CEPEL BRAZIL | SABS SABS SOUTH AFRICA | PTB GERMANY

Explosion Proof Multivoltage Motors
Explosion Proof Multivoltage Motors with Increased Safety Terminal Box
EEx d / EEx de IIB T4

Output KW	Output HP	Frame IEC	C_n (Nm)	I_l/I_n	T_l/T_n	T_b/T_n	Inertia J Kgm²	Allowable locket rortor time Hot/Cold (s)	Weight Kg	Sound dB (A)	400V rpm min^{-1}	% of full load Efficiency 50	Efficiency 75	Efficiency 100	Power Factor Cos 50	Power Factor Cos 75	Power Factor Cos 100	I_n (A)
II Pole - 3000 min^{-1}																		
0.75	1	90S	2,49	7.00	2.8	3.3	0.00181	25/55	26	68	2880	71.0	76.0	77.8	0.67	0.78	0.82	1.70
1.1	1.5	90S	3,66	7.20	2.4	2.8	0.00181	13/29	26	68	2870	75.0	78.5	79.0	0.68	0.78	0.84	2.39
1.5	2	90S	5,05	6.50	2.4	2.8	0.00181	12/26	27	68	2840	80.4	82.1	82.8	0.72	0.81	0.86	3.04
2.2	3	90L	7,40	6.60	2.8	3.0	0.00242	11/24	29	68	2840	82.2	83.7	83.4	0.67	0.78	0.84	4.53
3	4	100L	9,92	7.20	2.6	2.8	0.00616	11/24	42	67	2890	83.7	85.8	85.6	0.80	0.87	0.90	5.62
4	5.5	112M	13,1	7.80	2.7	3.1	0.00842	16/35	42	64	2910	86.4	87.5	87.5	0.77	0.85	0.88	7.50
5.5	7.5	132S	17,9	8.00	2.7	3.2	0.02056	9/20	86	68	2935	83.9	87.0	88.3	0.75	0.83	0.87	10.3
7.5	10	132S	24,5	7.80	2.5	3.0	0.02056	9/20	83	68	2920	86.5	87.5	88.5	0.76	0.84	0.88	13.9
11	15	160M	35,6	8.30	2.6	3.1	0.04707	15/33	135	70	2950	88.0	90.2	90.3	0.78	0.85	0.88	19.8
15	20	160M	48,7	8.30	2.5	3.2	0.05295	12/26	142	70	2945	89.6	91.3	91.2	0.77	0.85	0.88	26.9
18.5	25	160L	60,0	8.20	2.6	3.3	0.06471	10/22	186	70	2945	90.6	92.0	91.7	0.78	0.85	0.88	33.1
22	30	180M	71,3	8.20	2.8	2.8	0.14364	13/29	236	70	2950	91.1	92.4	92.1	0.75	0.83	0.87	39.5
30	40	200L	96,8	7.90	2.8	2.6	0.20630	19/42	301	74	2960	90.0	92.0	92.7	0.78	0.86	0.88	53.1
37	50	200L	119	7.60	2.8	2.9	0.22424	19/42	312	74	2960	92.4	93.0	93.0	0.80	0.86	0.88	63.8
45	60	225S/M	145	8.50	2.6	3.0	0.44846	17/37	510	78	2965	91.6	93.3	93.6	0.85	0.91	0.92	75.4
55	75	250S/M	177	8.50	2.9	3.3	0.55609	17/37	650	78	2965	92.1	93.5	93.8	0.85	0.90	0.92	92.0
75	100	280S/M	241	7.20	2.1	2.7	1.08257	42/92	740	79	2975	91.4	93.4	94.2	0.80	0.87	0.89	129
90	125	280S/M	289	8.30	2.2	2.8	1.27084	26/57	840	79	2975	92.2	93.8	94.5	0.81	0.87	0.89	154
110	150	315S/M	355	7.20	2.3	2.4	1.41204	32/70	878	81	2960	92.2	93.4	93.9	0.83	0.86	0.89	190
132	175	315S/M	425	7.70	2.2	3.0	1.64738	38/84	970	81	2970	93.0	94.3	94.8	0.85	0.89	0.90	223
160	220	315S/M	515	8.50	2.4	2.8	2.11806	25/55	1230	81	2970	93.2	94.2	95.0	0.87	0.89	0.90	270
200	270	355M/L	640	7.20	1.6	2.1	5.17106	67/147	1480	91	2985	93.6	95.1	95.6	0.88	0.89	0.90	336
250	340	355M/L	800	7.20	1.7	2.1	5.74562	18/40	1800	91	2985	94.0	95.6	95.8	0.88	0.90	0.91	414
HIGH OUTPUT DESIGN																		
75	100	250S/M	242	8.50	2.6	3.0	0.55609	12/26	573	78	2965	92.5	93.2	93.6	0.84	0.88	0.91	127
110	150	280S/M	353	7.60	2.3	3.0	1.41204	18/40	865	79	2975	92.9	94.4	94.7	0.83	0.86	0.89	188
IV Pole - 1500min^{-1}																		
0.75	1	90S	4,99	6.50	2.7	2.9	0.00392	13/29	26	47	1435	67.0	72.5	74.0	0.51	0.66	0.76	1.92
1.1	1.5	90S	7,51	5.50	2.5	2.6	0.00392	11/24	26	47	1400	71.5	76.2	76.2	0.61	0.75	0.82	2.54
1.5	2	90L	10,2	6.80	3.0	2.7	0.00560	10/22	33	47	1410	75.0	78.5	78.6	0.63	0.75	0.82	3.36
2.2	3	100L	14,7	6.70	2.8	3.0	0.00842	9/20	41	51	1430	79.8	82.3	83.0	0.64	0.77	0.83	4.61
3	4	100L	20,5	6.70	2.5	2.6	0.00919	8/18	43	51	1400	81.5	82.6	82.6	0.68	0.78	0.84	6.24
4	5.5	112M	26,5	7.00	2.6	2.8	0.01607	9/20	59	55	1440	80.5	84.2	84.2	0.65	0.77	0.82	8.36
5.5	7.5	132S	35,7	8.00	2.4	3.0	0.04264	10/22	82	58	1470	85.4	87.7	88.5	0.70	0.80	0.85	10.6
7.5	10	132M	48,9	8.10	2.5	2.8	0.05040	6/13	91	58	1465	86.4	88.4	88.6	0.78	0.84	0.86	14.2
9.2	12.5	160M	60,2	6.80	2.1	2.4	0.08030	16/35	110	62	1460	84.0	87.3	88.6	0.63	0.75	0.82	18.3
11	15	160M	72,0	7.00	2.1	2.4	0.08030	12/26	146	62	1460	85.0	88.0	89.1	0.76	0.84	0.86	20.7
15	20	160L	98,2	6.00	2.2	2.4	0.10037	9/20	167	62	1460	89.0	90.4	90.6	0.72	0.81	0.84	28.4
18.5	25	180M	120	7.50	2.7	3.0	0.17939	11/24	210	64	1475	89.8	91.5	92.1	0.65	0.75	0.82	35.4
22	30	180L	143	7.50	2.7	2.8	0.19733	14/31	216	64	1470	91.6	92.5	92.4	0.68	0.77	0.81	42.4
30	40	200L	194	6.50	2.2	2.5	0.33096	15/33	295	67	1475	91.8	93.0	93.0	0.75	0.82	0.85	54.8
37	50	225S/M	240	7.50	2.3	2.5	0.62988	12/26	392	70	1475	91.2	92.5	93.1	0.83	0.88	0.89	64.5
45	60	225S/M	291	7.40	2.3	2.8	0.76986	14/31	444	70	1480	92.0	92.8	93.2	0.75	0.87	0.88	79.2
55	75	250S/M	355	8.00	2.6	2.8	0.97982	12/26	526	70	1480	92.9	93.2	93.4	0.73	0.84	0.88	96.6
75	100	280S/M	483	6.80	2.1	2.5	1.84681	25/55	740	74	1485	92.0	93.3	93.6	0.76	0.82	0.86	134
90	125	280S/M	579	8.20	2.4	2.7	2.32859	15/33	820	74	1485	92.0	93.5	94.0	0.77	0.84	0.87	159
110	150	280S/M	708	7.50	2.3	2.5	2.81036	18/40	940	74	1485	93.0	94.0	94.4	0.76	0.84	0.86	196
132	175	315S/M	849	7.50	2.6	2.6	3.37244	27/59	1025	77	1485	93.3	94.5	95.1	0.73	0.81	0.86	233
160	220	315S/M	1029	8.50	2.7	2.7	3.77392	16/35	1170	77	1485	93.5	94.6	95.3	0.72	0.81	0.85	285
200	270	355M/L	1283	6.60	2.2	2.4	7.45663	18/40	1350	79	1490	95.0	95.4	95.5	0.81	0.86	0.88	343
250	340	355M/L	1609	7.20	2.3	2.5	8.38871	48/106	1490	79	1485	94.3	95.2	95.7	0.79	0.85	0.88	428
315	430	355M/L	2027	6.50	2.2	2.4	11.1850	22/48	1630	79	1485	95.0	95.8	96.1	0.81	0.87	0.88	538

C_n = Full load torque
I_l/I_n = Locked rotor current
T_l/T_n = Locked rotor torque
T_b/T_n = Breakdown torque
I_n = Full load current

Standard voltage, connection and frequency:

220-240V △ 50Hz	380-415V △ 50Hz
380-415V Y 50Hz	660-690V Y 50Hz
440-480V Y 60Hz	440-480V △ 60Hz

Output		380V								415V							
		rpm min^{-1}	% of full load						I_n (A)	rpm min^{-1}	% of full load						I_n (A)
			Efficiency			Power Factor Cos					Efficiency			Power Factor Cos			
KW	HP		50	75	100	50	75	100			50	75	100	50	75	100	
II Pole - 3000 min^{-1}																	
0.75	1	2870	70.0	76.0	77.8	0.70	0.80	0.84	1.74	2890	70.0	76.0	77.8	0.63	0.75	0.80	1.68
1.1	1.5	2850	76.0	78.0	78.0	0.72	0.82	0.85	2.52	2885	74.0	79.0	80.0	0.65	0.76	0.83	2.30
1.5	2	2830	76.5	80.5	81.2	0.75	0.83	0.88	3.19	2850	80.4	82.3	83.1	0.68	0.79	0.84	2.99
2.2	3	2830	83.1	83.5	83.3	0.70	0.80	0.87	4.61	2870	82.2	84.4	84.3	0.64	0.75	0.82	4.43
3	4	2880	84.2	85.7	85.1	0.84	0.89	0.91	5.89	2900	82.6	85.0	85.5	0.78	0.85	0.88	5.55
4	5.5	2890	87.0	87.5	87.5	0.80	0.86	0.89	7.80	2915	85.0	87.4	88.2	0.73	0.82	0.86	7.34
5.5	7.5	2930	84.4	88.7	88.4	0.77	0.85	0.88	10.7	2945	83.5	86.8	88.1	0.73	0.81	0.86	10.1
7.5	10	2910	85.5	87.5	87.5	0.80	0.87	0.89	14.6	2925	86.5	88.5	88.5	0.73	0.82	0.86	13.7
11	15	2945	88.1	90.0	90.3	0.80	0.86	0.89	20.7	2955	87.5	89.4	91.3	0.78	0.83	0.87	19.3
15	20	2935	90.1	91.4	91.1	0.82	0.87	0.89	28.0	2960	89.4	91.2	91.9	0.74	0.82	0.88	25.8
18.5	25	2940	90.9	92.0	91.6	0.81	0.86	0.89	34.5	2950	90.5	92.7	92.6	0.74	0.82	0.87	31.9
22	30	2940	91.5	92.5	92.1	0.77	0.85	0.88	41.2	2960	90.7	92.2	92.5	0.71	0.80	0.86	38.5
30	40	2950	90.0	92.0	92.7	0.80	0.87	0.89	55.2	2965	89.5	91.7	92.5	0.75	0.84	0.87	51.9
37	50	2960	92.4	93.0	93.0	0.82	0.87	0.89	66.4	2965	91.0	92.4	93.0	0.73	0.82	0.86	62.4
45	60	2960	91.9	93.4	93.5	0.88	0.92	0.93	78.6	2970	91.5	93.3	93.9	0.83	0.90	0.91	73.3
55	75	2965	91.8	93.2	93.5	0.87	0.91	0.93	96.1	2970	92.0	93.5	94.0	0.83	0.89	0.92	88.5
75	100	2970	91.9	93.6	94.2	0.83	0.88	0.90	134	2980	91.2	93.2	94.2	0.78	0.85	0.88	126
90	125	2970	92.3	93.9	94.5	0.82	0.89	0.90	161	2975	92.1	93.7	94.5	0.80	0.86	0.89	149
110	150	2950	92.0	93.3	93.8	0.84	0.87	0.89	200	2970	92.1	93.3	93.9	0.81	0.85	0.88	185
132	175	2965	93.1	94.4	94.8	0.86	0.89	0.90	235	2975	92.9	94.2	94.8	0.83	0.88	0.89	218
160	220	2960	93.4	94.4	95.0	0.88	0.90	0.91	281	2975	93.0	94.0	95.0	0.86	0.89	0.90	260
200	270	2985	93.3	95.0	95.5	0.89	0.90	0.91	350	2985	93.6	95.1	95.5	0.88	0.89	0.90	324
250	340	2980	93.8	95.6	95.8	0.89	0.91	0.92	431	2985	93.8	95.6	95.8	0.87	0.89	0.90	403
HIGH OUTPUT DESIGN																	
75	100	2965	92.3	93.0	93.4	0.85	0.89	0.92	133	2970	92.6	93.4	93.7	0.82	0.87	0.91	122
110	150	2970	93.0	94.4	94.7	0.84	0.87	0.89	198	2980	92.8	94.4	94.7	0.81	0.85	0.88	184
IV Pole - 1500 min^{-1}																	
0.75	1	1430	67.5	73.0	74.2	0.57	0.70	0.78	1.97	1440	64.5	71.5	73.6	0.48	0.61	0.72	1.97
1.1	1.5	1390	72.0	76.4	76.2	0.67	0.80	0.85	2.58	1410	70.0	76.2	76.3	0.56	0.71	0.80	2.51
1.5	2	1390	76.0	78.7	78.5	0.67	0.79	0.85	3.42	1420	73.5	78.5	78.8	0.58	0.72	0.80	3.31
2.2	3	1420	80.0	81.7	81.2	0.67	0.71	0.86	4.79	1440	79.0	82.0	83.0	0.62	0.75	0.82	4.50
3	4	1390	82.0	82.3	82.0	0.70	0.80	0.86	6.46	1410	80.5	82.5	82.7	0.65	0.75	0.82	6.15
4	5.5	1430	81.3	84.2	84.0	0.73	0.81	0.84	8.61	1445	79.5	83.5	84.0	0.60	0.74	0.79	8.39
5.5	7.5	1460	86.7	88.4	88.5	0.76	0.82	0.87	10.9	1475	83.8	87.7	87.8	0.62	0.74	0.82	10.6
7.5	10	1460	88.0	89.2	88.8	0.80	0.85	0.88	14.6	1470	85.0	87.7	88.6	0.75	0.80	0.83	14.2
9.2	12.5	1455	84.0	87.0	88.5	0.70	0.80	0.84	18.8	1465	84.0	87.2	88.6	0.57	0.70	0.80	18.1
11	15	1450	84.7	87.9	88.9	0.80	0.85	0.87	21.6	1465	85.0	87.8	89.0	0.71	0.83	0.85	20.2
15	20	1450	90.3	91.0	90.1	0.86	0.84	0.86	29.4	1465	88.3	90.0	90.1	0.68	0.78	0.83	27.9
18.5	25	1470	90.8	92.2	92.1	0.68	0.80	0.84	36.3	1475	88.6	91.0	92.0	0.60	0.73	0.80	35.0
22	30	1465	92.0	92.2	92.3	0.73	0.80	0.84	43.1	1475	91.1	91.7	92.5	0.65	0.75	0.79	41.9
30	40	1470	92.2	93.0	92.6	0.78	0.84	0.86	57.2	1480	91.8	93.1	93.3	0.73	0.81	0.85	52.6
37	50	1470	91.5	92.6	93.0	0.85	0.89	0.90	67.2	1480	90.0	92.0	93.0	0.81	0.87	0.88	62.9
45	60	1475	92.3	93.0	93.2	0.80	0.89	0.90	81.5	1480	91.5	92.6	93.1	0.70	0.82	0.86	78.2
55	75	1475	93.0	93.3	93.3	0.75	0.86	0.89	101	1480	92.5	93.1	93.5	0.70	0.82	0.87	94.1
75	100	1480	92.1	93.3	93.6	0.79	0.84	0.87	140	1485	91.5	93.0	93.6	0.73	0.81	0.85	131
90	125	1480	92.2	93.5	94.0	0.80	0.86	0.88	165	1490	91.6	93.4	94.0	0.74	0.82	0.86	155
110	150	1480	93.1	94.1	94.3	0.79	0.85	0.87	204	1485	92.9	93.9	94.4	0.74	0.82	0.85	191
132	175	1485	93.5	94.6	95.1	0.76	0.84	0.87	242	1490	93.0	94.4	95.1	0.70	0.80	0.85	227
160	220	1485	93.6	94.7	95.2	0.76	0.83	0.86	297	1490	93.2	94.5	95.3	0.70	0.78	0.83	281
200	270	1485	95.1	95.4	95.4	0.83	0.88	0.89	358	1490	94.8	95.4	95.5	0.79	0.85	0.87	335
250	340	1485	94.4	95.2	95.6	0.82	0.87	0.89	446	1490	94.0	95.0	95.6	0.76	0.84	0.87	418
315	430	1485	95.1	95.8	96.0	0.84	0.88	0.88	567	1490	94.8	95.6	96.0	0.79	0.86	0.87	525

Notes:
- *The motors can also operate to a 60Hz supply. The change in performance data can be obtained directly from the local WEG representative.*
- *The values shown herewith are subjected to change without prior notice.*

آتور صنعت
ATOORSANAT

Explosion Proof Multivoltage Motors
Explosion Proof Multivoltage Motors with Increased Safety Terminal Box
EEx d / EEx de IIB T4

Output KW	Output HP	Frame IEC	C_n (Nm)	I_l/I_n	T_l/T_n	T_b/T_n	Inertia J Kgm²	Allowable locket rortor time Hot/Cold (s)	Weight Kg	Sound dB (A)	400V rpm min^{-1}	% of full load Efficiency 50	Efficiency 75	Efficiency 100	Power Factor Cos 50	Power Factor Cos 75	Power Factor Cos 100	I_n (A)
VI Pole - 1000 min^{-1}																		
0.75	1	90L	7,92	5.20	1.9	2.0	0.00448	8/18	27	45	905	70.0	71.0	71.0	0.54	0.68	0.77	1.98
1.1	1.5	90L	11,5	4.50	1.9	2.2	0.00560	11/24	30	45	915	66.3	70.7	72.9	0.48	0.63	0.72	3.02
1.5	2	100L	15,2	4.80	2.2	2.5	0.01121	12/26	54	44	940	74.0	77.0	77.5	0.53	0.65	0.74	3.78
2.2	3	112M	22,4	5.00	2.2	2.3	0.01682	11/24	66	48	940	77.0	80.5	80.1	0.53	0.66	0.74	5.36
3	4	132S	30,2	5.30	1.9	2.2	0.03489	16/35	80	52	950	80.5	83.0	82.5	0.58	0.70	0.77	6.82
4	5.5	132M	39,8	6.00	2.1	2.2	0.05039	15/33	89	52	960	82.2	84.5	85.0	0.60	0.70	0.77	8.82
5.5	7.5	132M	54,7	6.40	2.2	2.4	0.06203	14/31	126	52	960	84.0	85.8	85.8	0.56	0.69	0.76	12.1
7.5	10	160M	73,9	6.40	2.3	2.9	0.12209	15/33	135	56	970	87.1	88.4	88.0	0.62	0.74	0.81	15.2
11	15	160L	108	6.70	2.4	2.6	0.17596	12/26	162	56	975	86.7	88.3	88.3	0.59	0.72	0.79	22.8
15	20	180L	149	7.50	2.5	2.6	0.30338	10/22	215	56	965	89.1	90.1	89.8	0.78	0.86	0.89	26.9
18.5	25	200L	181	6.00	2.3	2.5	0.37671	23/51	267	58	975	89.3	91.0	91.3	0.70	0.79	0.84	34.8
22	30	200L	216	6.30	2.3	2.6	0.41258	17/37	273	58	975	88.9	90.9	91.5	0.65	0.75	0.81	42.8
30	40	225S/M	291	7.20	2.5	2.6	0.98843	22/48	360	61	985	91.0	91.8	91.8	0.77	0.83	0.86	54.4
37	50	250S/M	361	7.90	2.5	2.7	1.22377	20/44	386	61	980	91.0	92.4	92.8	0.76	0.85	0.87	66.1
45	60	280S/M	437	6.80	2.2	2.5	2.29825	25/55	790	66	985	90.0	91.5	92.8	0.68	0.78	0.83	84.3
55	75	280S/M	534	6.80	2.2	2.5	2.64298	24/53	819	66	985	92.0	93.2	93.5	0.68	0.78	0.83	102
75	100	315S/M	728	6.70	2.1	2.3	3.10263	29/64	1060	69	985	92.0	93.4	93.7	0.71	0.81	0.85	136
90	125	315S/M	873	6.40	2.0	2.3	3.67719	22/48	1150	69	985	92.1	93.6	93.9	0.70	0.80	0.84	165
110	150	315S/M	1067	6.50	2.3	2.4	5.28597	30/66	1260	69	985	93.5	94.5	94.6	0.69	0.79	0.84	200
132	175	355M/L	1274	6.10	2.0	2.4	8.10160	20/44	1470	73	990	93.0	94.1	94.6	0.60	0.72	0.78	258
160	220	355M/L	1544	6.20	1.9	2.2	9.05472	25/55	1620	73	990	93.0	94.1	94.8	0.65	0.73	0.78	312
200	270	355M/L	1930	6.20	2.2	2.3	12.3907	25/55	1780	73	990	93.2	94.5	95.0	0.65	0.74	0.80	380
250	340	355M/L	2413	6.00	2.0	2.1	14.2969	30/66	1880	73	990	93.8	95.0	95.3	0.68	0.76	0.80	473
280	380	355M/L	2702	6.00	2.1	2.2	14.7735	30/66	1930	73	990	93.6	95.0	95.3	0.65	0.75	0.80	530
VIII Pole - 750 min^{-1}																		
0.37	0.5	90L	5,12	4.00	2.1	2.1	0.00448	12/26	30	43	690	50.0	57.5	61.0	0.40	0.50	0.58	1.51
0.55	0.75	90L	7,62	3.70	2.3	2.2	0.00561	16/35	31	43	690	51.6	60.0	64.0	0.40	0.50	0.60	2.07
0.75	1	100L	10,2	4.60	2.0	2.1	0.01121	26/57	42	50	700	60.0	67.0	69.0	0.38	0.48	0.59	2.66
1.1	1.5	100L	15,0	4.20	1.7	2.1	0.01289	21/46	62	50	700	64.0	70.0	72.2	0.43	0.56	0.65	3.38
1.5	2	112M	20,2	5.00	2.2	2.3	0.02243	18/40	78	46	710	71.5	75.5	76.3	0.46	0.60	0.68	4.17
2.2*	3	132S	29,6	6.00	2.1	2.3	0.05520	13/29	90	48	710	79.2	80.0	80.5	0.51	0.64	0.72	5.48
3	4	132M	40,4	6.50	2.5	2.6	0.07528	14/31	126	48	710	79.6	82.0	83.0	0.52	0.64	0.72	7.25
4	5.5	160M	52,4	5.40	2.3	3.1	0.12209	10/22	149	51	730	81.3	84.4	86.0	0.46	0.57	0.66	10.2
5.5	7.5	160M	72,0	5.40	2.4	3.2	0.14364	10/22	152	51	730	83.0	84.0	85.0	0.53	0.54	0.68	13.7
7.5	10	160L	98,8	5.00	2.1	2.4	0.16518	14/31	172	51	725	84.0	86.0	85.5	0.50	0.63	0.72	17.6
11	15	180L	145	6.80	2.2	2.4	0.30338	10/22	214	51	725	87.0	88.5	88.3	0.70	0.79	0.84	21.4
15	20	200L	198	5.00	2.0	2.1	0.37671	11/24	253	53	725	87.0	88.5	88.9	0.55	0.67	0.74	32.9
18.5	25	225S/M	240	6.70	2.1	2.5	0.84723	16/35	415	56	735	88.3	90.0	89.8	0.70	0.78	0.83	35.6
22	30	225S/M	288	6.50	2.1	2.4	0.98843	11/24	428	56	730	88.8	91.0	91.3	0.70	0.80	0.82	42.4
30	40	250S/M	393	6.80	2.1	2.4	1.22377	17/37	470	56	730	89.0	91.1	91.8	0.70	0.78	0.83	56.7
37	50	280S/M	481	6.70	1.8	2.2	2.29825	20/44	550	59	735	90.0	92.2	92.3	0.68	0.78	0.82	70.6
45	60	280S/M	581	7.30	1.9	2.0	2.64298	27/59	765	59	740	90.4	92.5	93.0	0.57	0.70	0.76	91.9
55	75	315S/M	715	6.50	1.9	2.0	3.10263	20/44	790	62	735	90.9	93.1	93.3	0.69	0.78	0.82	104
75	100	315S/M	968	7.20	1.9	2.0	4.36667	19/42	925	62	740	91.5	93.3	93.5	0.68	0.77	0.81	143
90	125	315S/M	1162	6.90	2.1	2.2	5.28597	26/57	1132	62	740	91.6	93.8	94.4	0.70	0.78	0.83	166
110	150	355M/L	1430	6.00	1.7	1.8	12.5604	30/66	1390	70	735	92.0	94.0	94.6	0.63	0.73	0.79	212
132	175	355M/L	1716	6.20	1.6	1.7	14.7585	31/68	1520	70	735	93.0	94.4	94.8	0.63	0.74	0.79	254
160	220	355M/L	2080	6.30	1.2	1.8	16.3286	56/123	1710	70	735	93.1	94.8	95.0	0.60	0.79	0.79	308
200	270	355M/L	2582	6.30	1.6	1.8	18.2126	30/66	1820	70	740	93.3	94.8	95.2	0.55	0.68	0.78	389

C_n = Full load torque
I_l/I_n = Locked rotor current
T_l/T_n = Locked rotor torque
T_b/T_n = Breakdown torque
I_n = Full load current

Standard voltage, connection and frequency:

220-240V △ 50Hz	380-415V △ 50Hz
380-415V Y 50Hz	660-690V Y 50Hz
440-480V Y 60Hz	440-480V △ 60Hz

Output		380V								415V							
		rpm min^{-1}	% of full load						I_n (A)	rpm min^{-1}	% of full load						I_n (A)
			Efficiency			Power Factor Cos					Efficiency			Power Factor Cos			
KW	HP		50	75	100	50	75	100			50	75	100	50	75	100	
VI Pole - 1000 min^{-1}																	
0.75	1	890	67.0	68.0	68.0	0.57	0.71	0.80	2.09	920	68.0	72.4	72.4	0.51	0.64	0.75	1.92
1.1	1.5	905	68.0	70.8	72.6	0.50	0.65	0.75	3.07	925	65.0	70.5	73.0	0.45	0.60	0.68	3.08
1.5	2	930	75.0	77.5	77.3	0.56	0.69	0.77	3.83	950	72.0	77.3	77.6	0.50	0.63	0.71	3.79
2.2	3	930	78.0	80.0	80.0	0.55	0.68	0.76	5.50	950	76.0	80.3	80.5	0.50	0.63	0.72	5.28
3	4	940	80.0	83.0	82.0	0.60	0.72	0.79	7.04	960	80.0	83.0	82.6	0.53	0.66	0.74	6.83
4	5.5	950	82.8	84.4	84.6	0.61	0.72	0.79	9.09	970	81.8	84.4	85.1	0.58	0.68	0.75	8.72
5.5	7.5	955	83.0	85.5	85.6	0.58	0.71	0.77	12.7	965	84.0	86.1	86.0	0.54	0.66	0.74	12.0
7.5	10	965	86.5	88.0	87.2	0.66	0.78	0.83	15.7	970	85.5	88.0	88.0	0.58	0.71	0.79	15.0
11	15	970	87.7	88.7	88.3	0.64	0.76	0.82	23.1	975	85.8	87.8	88.1	0.54	0.68	0.76	22.9
15	20	960	89.0	90.0	89.8	0.80	0.88	0.90	28.1	970	89.0	90.5	90.5	0.75	0.84	0.88	26.2
18.5	25	970	89.5	90.2	89.8	0.74	0.82	0.86	35.9	980	89.0	90.8	91.2	0.66	0.76	0.82	34.4
22	30	970	89.0	90.8	91.2	0.70	0.80	0.84	43.6	980	88.8	91.0	91.3	0.60	0.70	0.78	43.0
30	40	980	91.0	91.5	91.8	0.79	0.85	0.87	56.7	990	91.0	91.8	92.2	0.74	0.82	0.85	53.0
37	50	980	91.2	92.4	92.7	0.80	0.86	0.88	68.9	985	90.8	92.3	92.8	0.73	0.83	0.86	64.5
45	60	985	90.5	91.6	92.6	0.72	0.81	0.85	86.9	990	89.5	91.4	92.9	0.63	0.75	0.81	83.2
55	75	980	92.1	93.2	93.4	0.72	0.81	0.84	107	985	92.0	93.2	93.6	0.65	0.76	0.82	100
75	100	985	92.0	93.2	93.5	0.72	0.82	0.86	142	985	92.0	93.5	93.8	0.68	0.78	0.83	134
90	125	980	92.0	93.5	93.7	0.74	0.82	0.85	172	985	92.0	93.5	93.8	0.67	0.77	0.82	163
110	150	985	93.3	94.3	94.4	0.73	0.81	0.85	208	985	93.6	94.5	94.7	0.66	0.77	0.82	197
132	175	990	93.1	94.2	94.6	0.66	0.76	0.80	265	995	93.0	94.0	94.4	0.57	0.69	0.75	259
160	220	990	93.0	94.2	94.8	0.68	0.75	0.80	321	995	92.9	94.0	94.7	0.60	0.70	0.76	309
200	270	990	93.1	94.3	95.0	0.70	0.78	0.82	390	995	93.0	94.4	95.0	0.60	0.72	0.78	375
250	340	990	93.9	95.1	95.3	0.71	0.79	0.82	486	995	93.6	94.9	95.2	0.66	0.74	0.78	468
280	380	985	93.9	95.1	95.4	0.70	0.78	0.81	551	990	93.5	94.8	95.2	0.62	0.73	0.77	531
VIII Pole - 750 min^{-1}																	
0.37	0.5	680	52.3	60.0	62.0	0.42	0.53	0.62	1.46	700	48.0	57.0	61.0	0.36	0.47	0.55	1.53
0.55	0.75	680	54.0	61.0	64.7	0.44	0.55	0.64	2.02	700	48.5	57.2	62.5	0.38	0.47	0.56	2.19
0.75	1	690	60.0	67.0	69.0	0.40	0.50	0.61	2.71	710	60.0	68.4	69.0	0.36	0.46	0.57	2.65
1.1	1.5	690	64.0	70.0	72.0	0.45	0.58	0.67	3.46	710	64.0	71.5	72.2	0.40	0.53	0.63	3.36
1.5	2	700	72.0	75.7	76.0	0.50	0.63	0.70	4.28	715	71.0	75.0	76.3	0.43	0.57	0.66	4.14
2.2	3	700	79.5	80.0	80.0	0.56	0.68	0.75	5.57	715	78.5	79.6	80.5	0.48	0.61	0.70	5.43
3	4	700	80.5	82.5	82.0	0.54	0.66	0.74	7.51	715	78.0	81.5	82.0	0.50	0.62	0.70	7.27
4	5.5	725	82.6	85.0	85.9	0.48	0.61	0.70	10.1	730	79.9	83.6	86.0	0.41	0.54	0.63	10.3
5.5	7.5	725	83.0	84.7	85.2	0.45	0.55	0.69	14.2	730	83.0	84.0	85.0	0.40	0.52	0.68	13.2
7.5	10	720	84.0	86.0	85.5	0.52	0.65	0.73	18.3	730	84.0	86.0	85.5	0.48	0.60	0.70	17.4
11	15	720	87.0	88.0	88.0	0.72	0.80	0.85	22.3	730	87.0	88.6	88.5	0.68	0.78	0.83	20.8
15	20	720	86.0	88.0	88.0	0.60	0.70	0.76	34.1	730	87.0	88.5	88.9	0.50	0.64	0.72	32.6
18.5	25	730	88.3	90.0	89.8	0.72	0.80	0.84	37.3	740	88.2	90.3	90.2	0.67	0.76	0.82	34.8
22	30	725	89.0	90.6	90.9	0.72	0.80	0.83	44.3	735	88.3	91.0	91.2	0.67	0.78	0.80	41.9
30	40	725	89.2	91.0	91.7	0.72	0.79	0.83	59.9	735	88.9	91.0	92.0	0.68	0.77	0.82	55.3
37	50	730	90.3	92.0	92.1	0.70	0.79	0.83	73.5	740	90.0	92.2	92.4	0.65	0.76	0.80	69.6
45	60	735	90.3	92.4	92.7	0.60	0.72	0.78	94.6	740	90.2	92.5	93.0	0.55	0.68	0.74	91.0
55	75	735	91.2	93.0	93.1	0.71	0.80	0.83	108	740	90.6	93.1	93.4	0.65	0.76	0.81	101
75	100	735	91.3	93.2	93.3	0.70	0.78	0.82	149	740	91.4	93.3	93.4	0.65	0.75	0.79	141
90	125	735	91.8	93.7	94.2	0.73	0.80	0.84	173	740	91.5	93.7	94.3	0.68	0.76	0.81	164
110	150	730	92.3	93.9	94.5	0.65	0.74	0.80	221	740	92.0	94.0	94.5	0.60	0.70	0.77	210
132	175	730	92.9	94.2	94.6	0.65	0.75	0.80	265	740	92.9	94.4	94.8	0.60	0.72	0.78	248
160	220	735	93.2	94.6	94.8	0.60	0.80	0.80	321	740	93.0	94.9	95.0	0.58	0.78	0.78	300
200	270	740	93.3	94.7	95.0	0.58	0.70	0.80	400	745	93.2	94.6	95.2	0.50	0.65	0.76	385

آتور صنعت
ATOORSANAT

Notes:
- *The motors can also operate to a 60Hz supply. The change in performance data can be obtained directly from the local WEG representative.*
- *The values shown herewith are subjected to change without prior notice.*

Two Speed Explosion Proof Motors
Two Speed Explosion Proof Motors With Increased Safety Terminal Box
EEx d / EEx de IIB T3

Output kW	Frame IEC	rpm mim^{-1}	I_n A 400V	T_l / T_n	I_l / I_n	Inertia J kgm²	Weight kg
II / IV Pole - 3000/1500 min^{-1}							
0.85/0.70	90S	2815/1390	2.19/1.71	1.8/1.8	4.3/4.3	0.0033	25
1.40/1.10	90L	2705/1380	3.33/2.47	2.6/2.3	5.2/5.5	0.0045	31
1.90/1.50	100L	2880/1430	4.00/3.33	2.0/1.9	5.3/4.9	0.0074	41
2.40/2.00	100L	2850/1400	5.70/4.75	2.9/2.5	7.8/6.4	0.0085	44
3.10/2.60	112M	2855/1420	6.18/5.32	2.5/2.0	7.7/6.4	0.0146	58
4.40/3.70	132S	2920/1465	11.4/7.70	2.5/2.2	7.4/7.1	0.0349	68
5.90/4.90	132S	2885/1440	14.3/9.50	2.0/1.8	6.0/6.7	0.0407	73
8.00/6.80	132M	2870/1440	17.1/13.3	1.9/1.9	6.1/6.3	0.0465	84
11.0/9.50	160M	2930/1460	23.8/19.0	2.1/2.1	7.5/7.1	0.0722	125
14.5/12.0	160L	2900/1455	29.5/23.8	3.0/2.9	8.5/8.3	0.0832	157
18.0/15.0	180M	2940/1465	34.2/28.5	2.3/2.2	6.8/5.8	0.1773	200
21.5/18.0	180L	2930/1470	40.9/34.2	3.3/2.9	8.7/7.3	0.2532	268
27.0/22.0	200M	2935/1470	48.5/39.9	2.3/1.8	8.3/6.7	0.2736	272
31.0/26.0	200L	2940/1470	58.9/47.5	2.6/2.0	9.2/7.5	0.2936	282
38.0/32.0	225S/M	2940/1470	77.0/56.0	2.1/1.8	7.5/6.1	0.6759	415
45.0/38.0	225S/M	2930/1460	88.4/67.5	2.4/2.5	7.3/6.2	0.7866	455
55.0/46.0	250S/M	2955/1470	106/81.7	2.8/2.2	9.2/6.8	0.9483	490
75.0/63.0	280S/M	2945/1480	144/111	1.8/1.8	6.6/6.2	1.8495	750
87.0/73.0	280S/M	2965/1480	164/127	1.8/1.7	7.5/7.0	2.2306	830
100/85.0	315S/M	2970/1480	193/151	2.3/1.8	8.9/6.5	2.4097	995
120/100	315S/M	2980/1485	233/1779	2.9/2.2	8.5/7.8	2.5985	1025

آتور صنعت
ATOORSANAT

I_l/I_n = Locked rotor current
T_l/T_n = Locked rotor torque
I_n = Full load current

Notes:
- *The motors can also operate to a 60Hz supply. The change in performance data can be obtained directly from the local WEG representative.*
- *The values shown herewith are subjected to change without prior notice.*

Output kW	Frame IEC	rpm mim^{-1}	I_n A 400V	T_l / T_n	I_l / I_n	Inertia J kgm²	Weight kg
IV / VI Pole - 1500/1000 min^{-1}							
0.65/038	90S	1435/960	1.71/1.43	2.4/2.8	6.2/5.1	0.0045	30
0.90/0.55	100L	1430/970	2.47/2.28	2.0/2.8	5.5/5.8	0.0103	41
1.30/0.90	100L	1430/940	3.04/2.57	2.2/2.1	6.5/5.1	0.0103	41
1.7/1.1	112M	1450/965	3.90/3.23	2.3/1.9	7.8/5.6	0.0175	54
2.3/1.5	112M	1460/965	5.42/4.56	2.7/2.5	8.6/6.2	0.0185	57
2.7/1.8	132S	1450/975	6.75/4.75	2.5/2.3	7.6/6.6	0.0292	66
3.1/2.0	132M	1450/980	7.60/5.60	2.4/2.3	8.6/8.3	0.0437	85
4.3/2.8	160M	1475/980	9.12/7.41	2.3/2.4	9.0/8.3	0.0643	117
6.6/4.3	160M	1465/980	12.4/10.5	2.3/2.3	9.0/8.4	0.097	172
8.7/5.7	160L	1470/980	17.1/13.3	2.5/2.3	8.5/8.5	0.1052	183
11.4/7.4	180M	1480/985	23.8/18.1	3.4/2.6	8.9/6.1	0.2482	210
14/9.5	180L	1470/980	26.6/21.9	2.7/2.7	7.6/5.6	0.2696	215
16.5/11	200M	1480/985	33.3/25.7	2.3/2.1	8.9/6.8	0.3454	267
20/13.2	200L	1480/985	38.0/31.4	2.3/2.2	9.8/7.2	0.3553	274
24/16	225S/M	1480/968	45.6/34.2	3.1/2.3	9.6/6.9	0.9635	440
31/21	225S/M	1475/985	54.2/40.9	2.3/2.1	7.6/6.2	1.0432	470
37/25	250S/M	1480/985	70.3/53.2	3.2/2.2	9.6/6.1	1.156	515
47/32	250S/M	1485/990	88.4/63.7	3.0/2.0	9.1/5.7	1.2687	520
66/45	280S/M	1475/985	117/82.7	2.3/2.3	7.8/7.3	2.529	770
80/54	280S/M	1480/990	140/108	2.0/3.2	6.6/9.1	2.9021	800
92/62	315S/M	1485/990	185/121	3.0/2.7	9.1/8.1	3.3364	1060
110/75	315SM	1475/985	191/137	2.7/1.6	8.5/5.1	4.6245	1260

آتور صنعت
ATOORSANAT

I/I_n = Locked rotor current
T/T_n = Locked rotor torque
I_n = Full load current

Notes:
- *The motors can also operate to a 60Hz supply. The change in performance data can be obtained directly from the local WEG representative.*
- *The values shown herewith are subjected to change without prior notice.*

Two Speed Explosion Proof Motors
Two Speed Explosion Proof Motors With Increased Safety Terminal Box
EEx d / EEx de IIB T3

Output kW	Frame IEC	rpm mim^{-1}	I_n A 400V	T_l / T_n	I_l / I_n	Inertia J kgm²	Weight kg
VI / VIII Pole - 1500/750 min^{-1}							
0.50/0.35	90L	1375/670	1.43/1.24	1.4/1.4	3.2/2.6	0.0045	30
0.70/0.50	100L	1370/680	2.19/1.71	1.6/1.4	4.0/2.9	0.0103	41
1.10/0.70	100L	1400/700	2.47/2.28	1.7/1.5	5.1/2.5	0.0125	45
1.50/0.90	112M	1410/705	3.14/2.57	2.5/2.2	6.7/5.1	0.0157	58
1.90.1.40	132S	1420/720	4.00/3.80	3.5/2.6	8.2/6.4	0.0461	73
3.60/1.80	132M	1410/725	7.22/5.42	3.3/3.9	7.7/7.7	0.054	84
5.0/2.50	160M	1465/735	9.50/7.41	2.2/2.2	9.3/6.4	0.0737	137
7.0/3.50	160M	1455/725	13.3/9.31	1.9/1.9	8.0/6.0	0.0861	144
8.0/4.0	160L	1460/730	15.2/11.4	1.9/2.1	8.7/6.4	0.097	172
10/5.1	180M	1435/730	18.1/13.3	2.0/2.3	8.0/8.3	0.2267	195
18/11	180L	1455/725	33.3/22.8	25.3/2.5	8.7/8.0	0.2996	228
21.5/14	200M	1460/730	38.0/27.6	2.2/2.0	7.5/6.5	0.3015	240
17/17	200L	1455/730	47.5/33.3	2.2/2.0	7.5/6.5	0.3554	270
32/32	225S/M	1455/725	56.1/41.8	1.8/1.8	8.1/6.7	08538	415
37/25	250S/M	1455/725	63.7/46.7	1.8/1.6	7.7/6.3	1.1589	523
47/32	250S/M	1465/730	79.8/60.0	2.4/2.1	9.2/8.3	1.2921	550
56/38	280S/M	1480/740	99.0/76.0	1.7/1.5	6.6/6.2	2.4920	765
67/46	280S/M	1475/740	115/88.4	1.7/1.4	8.3/7.2	2.8625	820
82/56	315S/M	1485/745	143/114	2.7/2.3	8.9/7.5	3.8762	1018
115/78	315S/M	1485/745	196/152	2.5/1.9	7.5/7.8	4.6125	1132

I_l/I_n = Locked rotor current
T_l/T_n = Locked rotor torque
I_n = Full load current

Notes:
- *The motors can also operate to a 60Hz supply. The change in performance data can be obtained directly from the local WEG representative.*
- *The values shown herewith are subjected to change without prior notice.*

آتور صنعت
ATOORSANAT

EEx e – Increased Safety Multivoltage Motors

STANDARD FEATURES

- *Three phase, Multivoltage, 50Hz or 60Hz*
- *Cast iron frame 63 up to 132S/M*
- *Output range from 0,18 to 6,8kW (II and IV poles)*
- *Class of temperature T1 / T2 / T3 / T4*
- *Class "F" insulation with ΔT 70K (as per VIK standards)*
- *Design N*
- *Thermistors 110ºC – 1 per phase*
- *Squirrel cage rotor (aluminium die cast)*
- *Aluminium fan*
- *Degree of protection Ip55 or IP56*
- *Plastic threaded plug*
- *Increased safety terminal box*
- *Earth lug inside the terminal box*
- *V'ring seal*
- *Stainless steel nameplate identifying: standards, classification, temperature code, certification number*
- *Epoxy based paint plan RAL 5010*

ACCORDING TO ATEX DIRECTIVE-PTB

CE

VIK

OPTIONAL FEATURES

- *Epoxy resin impregnation*
- *Other paint options*
- *Cable gland*

CLASSIFICATION

IEC Standard:	*CENELEC Standard:*
Zone 1; Group IIC	*Group IIC; Category 2*

Note: The classification in Zone 1 means that the motor is suitable to operate also in Zone 2 once Zone 1 represents an operating condition worse than Zone 2. The same applies to Groups and Categories: EEx e motors are suitable to operate also in Group IIA and IIB and Category 3.

آتور صنعت
ATOORSANAT

CERTIFICATION

WEG increased safety motors are certified by PTB – Physikalisch - Technishe Bundesanstalt. The PTB certificates of conformity for explosion proof in increased safety enclosure "e" as per EN50014/ EN50019 are:

EEx e – Increased safety motors (class of temperature T1 / T2 / T3 / T4)

Frames	Certificate number
63	PTB 01 ATEX 3204
71	PTB 01 ATEX 3205
80	PTB 01 ATEX 3206
90	PTB 01 ATEX 3207
100	PTB 01 ATEX 3208
112	PTB 01 ATEX 3209
132	PTB 01 ATEX 3210

WEG increased safety motors also meet ATEX Directive 94/9/EC and WIK standards.

PTB
GERMANY

Increased Safety Multivoltage Motors

EEx e IIC T1 / T2 / T3 / T4

Output KW	Output HP	Frame IEC	C_n (Nm)	I_l/I_n	T_l/T_n	T_b/T_n	Inertia J Kgm²	Weight Kg	Sound dB (A)	t_E Time T1	T2	T3	T4	380V - 420V rpm min^{-1}	% of full load Efficiency 100%	Power Factor Cos 100%	I_n (A)	Data Sheet PTB-ATEX
II Pole - 3000 min^{-1}																		
0,18	0,25	63	0,63	4,40	2,7	2,7	0,00012	7	52	35	35	35	-	2750	66,2	0,77	0,51	3204/05
0,25	0,33	63	0,87	4,50	2,8	3,3	0,00016	7	52	23	23	19	-	2735	66,8	0,72	0,75	3204/01
0,37	0,5	71	1,26	5,80	3,1	3,1	0,00033	8	52	24	24	24	9	2810	73,9	0,83	0,87	3205/01
0,55	0,75	71	1,88	6,30	2,9	3,3	0,00045	11	56	18	18	15	-	2800	75,7	0,86	1,22	3205/05
0,75	1	80	2,53	5,90	3,0	3,2	0,00079	14	59	20	20	10	-	2830	75,0	0,87	1,66	3206/01
1,1*	1,5	80	3,75	6,70	2,6	2,8	0,00096	16	59	9	9	8	-	2800	79,0	0,84	2,39	-
1,3	1,77	90S	4,35	6,90	2,7	2,8	0,00205	20	65	14	14	11	-	2855	77,9	0,86	2,80	3207/07
1,85	2,51	90L	6,20	7,10	2,7	2,7	0,00266	24	65	11	11	7	-	2850	81,6	0,85	3,85	3207/01
2,5	3,4	100L	8,31	7,50	2,3	2,7	0,00616	31	67	10	10	8	-	2875	77,7	0,91	5,10	3208/01
3,3	4,5	112M	10,9	8,10	2,3	2,9	0,00765	42	64	18	18	6	-	2890	84,2	0,87	6,50	3209/01
4,6	6,25	132S	15,1	7,40	2,2	2,7	0,02243	70	68	17	17	13	-	2905	81,1	0,93	8,78	3210/09
5,5	7,5	132S	18,1	7,70	2,1	2,8	0,02617	71	68	11	11	9	-	2900	83,0	0,92	10,4	3210/01
6,5	8,8	132S	21,6	7,70	2,1	2,7	0,02430	67	68	9	9	-	-	2880	83,8	0,91	12,3	3210/03
IV Pole - 1500 min^{-1}																		
0,18	0,25	63	1,22	4,1	2,1	2,2	0,00056	8	44	24	24	24	-	1405	63,5	0,66	0,62	3204/03
0,25	0,33	71	1,69	5,0	2,8	2,8	0,00079	11	43	60	60	60	30	1415	73,7	0,68	0,72	3205/07
0,37	0,5	71	2,54	4,6	2,5	2,5	0,00079	11	43	40	40	40	10	1390	75,4	0,65	1,09	3205/03
0,55	0,75	80	3,69	6,0	2,3	2,4	0,00242	14	44	22	22	22	-	1425	78,8	0,73	1,38	3206/05
0,75	1	80	5,06	5,9	2,2	2,7	0,00294	15	44	13	13	13	-	1415	75,0	0,82	1,76	3206/03
1	1,36	90S	6,73	6,4	2,7	2,8	0,00504	20	47	17	17	17	-	1420	78,4	0,80	2,30	3207/05
1,35	1,83	90L	9,12	6,7	2,6	3,0	0,00672	23	47	15	15	15	-	1415	79,6	0,83	2,95	3207/03
2	2,72	100L	13,5	6,3	2,3	2,5	0,00765	28	51	17	17	17	-	1415	80,9	0,82	4,35	3208/05
2,5	3,4	100L	16,9	6,3	2,4	2,6	0,01072	36	51	14	14	14	-	1410	79,5	0,84	5,40	3208/03
3,6	4,9	112M	24,1	7,2	2,3	2,8	0,01875	46	55	11	11	10	-	1430	82,6	0,85	7,40	3209/03
5	6,8	132S	32,7	8,4	2,2	2,8	0,05039	67	58	7	7	7	-	1460	84,8	0,86	9,90	3210/05
6,8	9,24	132M	44,5	8,2	2,2	2,8	0,05815	73	58	8	8	7	-	1460	85,2	0,86	13,4	3210/07

آتور صنعت
ATOORSANAT

C_n = Full load torque
I/I_n = Locked rotor current
T/T_n = Locked rotor torque
T_b/T_n = Breakdown torque
I_n = Full load current

Standard voltage, connection and frequency:
218-242V △ 50Hz *380-420V △ 50Hz*
380-420V Y 50Hz *655-725V Y 50Hz*
Intermediate voltage ratings may also be supplied.

Notes:
- * *Output under certification with delivery time extended at about 30 days. The values can be changed after certification.*
- *The values in the table above are related to 400V.*
- *The motors can also operate at a 60Hz supply. The change in performance data can be obtained directly from the local WEG representative.*
- *The values shown herewith are subjected to change without prior notice.*

EEx nA – Non Sparking Multivoltage Motors

STANDARD FEATURES

- *Three phase, Multivoltage, 50Hz or 60Hz*
- *Cast iron frame 63 up to 315S/M*
- *Output range from 0,12 to 160kW (II, IV, VI and VIII poles)*
- *Class of temperature T3*
- *Class "F" insulation with △T 80K*
- *Design N*
- *Thermistors 155ºC – 1 per phase*
- *Squirrel cage rotor (aluminium die cast)*
- *Aluminum fan*
- *Degree of protection Ip55 or IP56*
- *Plastic threaded plug*
- *Increased safety terminal box*
- *Earth lug inside the terminal box*
- *V'ring seal*
- *Additional stainless steel nameplate identifying: standards, classification, temperature code, certification number*
- *Epoxy based paint plan: Standard Efficiency (EFF2) - RAL 5010*
  Premium Efficiency (EFF1) - RAL 5009
  Top Premium Efficiency (exceeds (EFF1)) - RAL 6021

OPTIONAL FEATURES

- *Epoxy resin impregnation*
- *Other paint options*
- *Cable gland*

CLASSIFICATION

IEC Standard:	*CENELEC Standard:*
Zone 2; Group IIC	*Group IIC; Category 3*

Note: The classification in Group IIC means that the motor is suitable to operate also in Groups IIA and IIB once Group IIC represents an operating condition worse than Groups IIA and IIB.

CERTIFICATION

WEG non sparking motors meet ATEX Directive 94/9/EC certified by PTB - Physikalisch-Techhnishe Bundensanstalt as per EN50014 / EN50021.

PTB GERMANY CEPEL BRAZIL

Non Sparking Multivoltage Motors
EEx nA IIC T3

Output KW	Output HP	Frame IEC	C_n (Nm)	I_l/I_n	T_l/T_n	T_b/T_n	Inertia J Kgm²	Allowable locket rortor time Hot/Cold (s)	Weight Kg	Sound dB (A)	400V rpm min^{-1}	% of full load Efficiency 50	Efficiency 75	Efficiency 100	Power Factor Cos 50	Power Factor Cos 75	Power Factor Cos 100	I_n (A)
II Pole - 3000 min^{-1}																		
0,12	0,16	63	0,41	5,00	2,8	3,2	0,00013	26/57	6	52	2820	49,0	57,0	60,5	0,52	0,63	0,70	0,41
0,18	0,25	63	0,63	4,20	2,7	2,7	0,00013	36/79	7	52	2735	62,0	68,0	68,5	0,60	0,73	0,82	0,46
0,25	0,33	63	0,86	4,50	2,8	3,3	0,00017	25/55	7	52	2790	63,7	69,1	70,4	0,58	0,70	0,78	0,66
0,37	0,5	71	1,26	5,50	3,1	3,3	0,00034	24/53	10	56	2810	67,2	72,0	73,6	0,62	0,73	0,81	0,90
0,55	0,75	71	1,88	5,50	2,9	3,3	0,00045	16/35	11	56	2800	72,2	75,8	76,2	0,68	0,78	0,85	1,23
0,75	1	80	2,55	5,80	2,9	3,1	0,00079	25/55	14	59	2805	75,5	80,0	79,9	0,76	0,84	0,87	1,56
1,1	1,5	80	3,73	5,70	2,7	2,9	0,00091	15/33	15	59	2820	77,1	80,2	79,7	0,70	0,80	0,86	2,32
1,5	2	90S	5,01	6,50	2,6	3,2	0,00206	17/37	20	68	2860	81,7	83,7	83,6	0,72	0,81	0,85	3,05
2,2	3	90L	7,40	6,60	2,8	3,0	0,00242	9/20	22	68	2840	82,2	83,7	83,4	0,67	0,78	0,84	4,53
3	4	100L	9,92	6,80	2,6	2,8	0,00617	9/20	31	67	2890	83,7	85,8	85,6	0,75	0,83	0,87	5,81
4	5,5	112M	13,1	7,80	2,7	3,1	0,00842	16/35	42	64	2910	86,4	87,5	87,5	0,77	0,85	0,88	7,41
5,5	7,5	132S	17,9	8,00	2,7	3,2	0,02056	17/37	61	68	2935	83,9	87,0	88,3	0,75	0,83	0,87	10,3
7,5	10	132S	24,5	6,80	2,4	2,8	0,02430	11/24	67	68	2920	87,0	89,0	89,3	0,78	0,86	0,89	13,6
11	15	160M	35,6	8,30	2,6	3,1	0,04707	15/33	104	70	2950	88,0	90,2	90,3	0,78	0,85	0,88	19,8
15	20	160M	48,7	8,30	2,5	3,2	0,05295	12/26	111	70	2945	89,6	91,3	91,2	0,77	0,85	0,88	26,9
18,5	25	160L	60,0	8,20	2,6	3,3	0,06472	11/24	126	70	2945	90,6	92,0	91,7	0,78	0,85	0,88	32,9
22	30	180M	71,3	8,20	2,8	2,8	0,14364	13/29	172	70	2950	91,1	92,4	92,1	0,75	0,83	0,87	39,5
30	40	200L	96,8	7,90	2,8	2,6	0,20630	19/42	239	74	2960	90,0	92,0	92,7	0,78	0,86	0,88	53,1
37	50	200L	119	7,60	2,8	2,9	0,22424	19/42	253	74	2960	92,4	93,0	93,0	0,80	0,86	0,88	63,8
45	60	225S/M	145	8,10	2,6	3,0	0,39465	21/46	411	78	2965	91,6	93,3	93,6	0,85	0,91	0,92	75,4
55	75	250S/M	178	8,50	2,7	3,0	0,55609	17/37	490	78	2960	92,1	93,5	93,8	0,87	0,92	0,93	90,8
75	100	280S/M	241	7,50	2,3	2,8	1,08257	49/108	655	79	2975	91,4	93,4	94,2	0,81	0,87	0,89	129
90	125	280S/M	291	8,30	2,4	2,8	1,27084	42/92	705	79	2960	92,0	93,8	94,5	0,81	0,87	0,89	154
110	150	315S/M	354	7,60	2,3	2,5	1,41204	48/106	823	81	2970	92,9	94,4	94,9	0,84	0,89	0,90	186
132	175	315S/M	424	7,70	2,4	2,8	1,74151	41/90	937	81	2975	92,6	94,5	95,0	0,84	0,90	0,91	220
160	220	315S/M	515	9,00	2,2	2,4	2,11806	34/75	1010	81	2970	93,0	94,8	95,4	0,81	0,86	0,89	272
IV Pole - 1500 min^{-1}																		
0,12	0,16	63	0,84	5,00	2,4	2,5	0,00045	14/31	7	44	1370	44,0	54,0	59,0	0,45	0,55	0,65	0,45
0,18	0,25	63	1,24	4,00	2,1	2,2	0,00057	23/51	8	44	1390	53,8	59,5	61,0	0,59	0,68	0,75	0,57
0,25	0,33	71	1,69	4,50	3,0	3,1	0,00079	48/106	11	43	1415	68,0	73,0	74,0	0,50	0,63	0,71	0,69
0,37	0,5	71	2,53	4,50	2,7	2,8	0,00079	43/95	11	43	1400	68,5	72,0	73,6	0,50	0,62	0,70	1,04
0,55	0,75	80	3,65	5,50	2,5	2,7	0,00242	20/44	14	44	1440	69,0	74,0	75,0	0,58	0,70	0,78	1,36
0,75	1	80	5,06	5,50	2,4	2,6	0,00294	16/35	15	44	1415	76,0	78,6	76,2	0,62	0,74	0,83	1,71
1,1	1,5	90S	7,30	6,50	3,0	2,8	0,00505	16/35	20	47	1440	76,0	80,0	80,6	0,57	0,69	0,77	2,56
1,5	2	90L	10,1	5,90	2,8	2,7	0,00673	14/31	23	47	1420	80,3	82,3	81,7	0,64	0,77	0,83	3,19
2,2	3	100L	14,7	6,70	2,8	3,0	0,00842	9/20	31	51	1430	79,8	82,3	83,0	0,64	0,77	0,83	4,61
3	4	100L	20,2	6,50	2,8	2,7	0,00995	11/24	34	51	1420	83,8	85,4	84,7	0,68	0,79	0,86	5,94
4	5,5	112M	26,5	7,00	2,7	2,8	0,01875	14/31	46	55	1440	86,9	87,8	87,1	0,70	0,81	0,87	7,62
5,5	7,5	132S	35,7	8,00	2,4	3,0	0,04264	10/22	60	58	1470	85,4	87,7	88,5	0,70	0,80	0,85	10,6
7,5	10	132M	48,7	8,00	2,5	2,8	0,05040	7/15	67	58	1470	86,4	88,4	88,6	0,70	0,80	0,86	14,2
11	15	160M	71,5	6,00	2,2	2,5	0,08030	16/35	105	62	1470	87,8	89,4	89,9	0,70	0,79	0,84	21,0
15	20	160L	98,2	6,00	2,2	2,4	0,10037	12/26	121	62	1460	89,0	90,4	90,6	0,72	0,81	0,84	28,4
18,5	25	180M	120	7,50	2,7	3,0	0,16146	11/24	160	64	1475	89,8	91,5	92,1	0,65	0,75	0,82	35,2
22	30	180L	143	7,50	2,7	2,8	0,19733	14/31	183	64	1470	91,6	92,5	92,4	0,68	0,77	0,81	42,4
30	40	200L	194	6,50	2,2	2,5	0,33096	14/31	233	67	1475	91,8	93,0	93,0	0,75	0,82	0,85	54,8
37	50	225S/M	239	7,40	2,3	2,7	0,62988	20/44	350	70	1480	91,6	92,2	92,8	0,76	0,85	0,88	65,4
45	60	225S/M	292	7,00	2,3	2,5	0,76986	12/26	382	70	1475	91,0	92,9	93,5	0,81	0,87	0,88	78,9
55	75	250S/M	356	7,50	2,5	2,6	0,97982	16/35	460	70	1475	92,7	93,1	93,4	0,80	0,86	0,90	94,4
75	100	280S/M	483	6,70	2,1	2,4	2,32859	40/88	735	74	1485	92,4	93,8	94,3	0,83	0,88	0,90	128
90	125	280S/M	579	7,10	2,4	2,7	2,81036	31/68	802	74	1485	92,3	93,7	94,2	0,81	0,87	0,89	155
110	150	315S/M	708	7,70	2,3	2,6	2,81036	28/62	865	77	1485	92,5	94,0	94,3	0,78	0,84	0,88	191
132	175	315S/M	852	7,30	2,2	2,6	3,77392	31/68	1010	77	1480	93,3	94,8	95,1	0,80	0,85	0,88	228
160	220	315S/M	1029	7,00	2,4	2,7	3,77392	22/48	1010	77	1485	93,3	95,1	95,5	0,78	0,85	0,87	278

C_n = Full load torque
I_l/I_n = Locked rotor current
T_l/T_n = Locked rotor torque
T_b/T_n = Breakdown torque
I_n = Full load current

Standard voltage, connection and frequency:

220-240V △ 50Hz	380-415V △ 50Hz
380-415V Y 50Hz	660-690V Y 50Hz
440-480V Y 60Hz	440-480V △ 60Hz

آتور صنعت
ATOORSANAT

Output		380V								415V							
		rpm min^{-1}	% of full load						I_n (A)	rpm min^{-1}	% of full load						I_n (A)
			Efficiency			Power Factor Cos					Efficiency			Power Factor Cos			
KW	HP		50	75	100	50	75	100			50	75	100	50	75	100	
II Pole - 3000 min^{-1}																	
0,12	0,16	2800	50,0	58,0	62,0	0,56	0,68	0,76	0,39	2835	47,0	55,0	60,0	0,49	0,61	0,68	0,41
0,18	0,25	2710	61,9	68,0	68,2	0,63	0,76	0,84	0,48	2760	59,0	67,3	68,6	0,58	0,70	0,78	0,47
0,25	0,33	2740	63,9	68,9	69,5	0,62	0,72	0,82	0,67	2800	60,6	67,0	69,8	0,55	0,67	0,75	0,66
0,37	0,5	2790	68,8	72,8	73,5	0,66	0,77	0,84	0,91	2825	66,5	71,8	73,5	0,60	0,71	0,79	0,89
0,55	0,75	2770	73,1	76,1	75,2	0,70	0,86	0,87	1,28	2820	70,0	75,7	76,3	0,63	0,75	0,84	1,19
0,75	1	2770	78,5	79,7	78,5	0,78	0,86	0,89	1,63	2825	77,3	80,6	79,8	0,72	0,81	0,87	1,50
1,1	1,5	2800	79,9	81,1	82,1	0,73	0,83	0,89	2,29	2840	76,6	80,0	79,8	0,64	0,75	0,85	2,26
1,5	2	2850	81,8	83,8	83,0	0,74	0,83	0,87	3,16	2870	80,8	83,7	83,8	0,68	0,78	0,83	3,00
2,2	3	2830	83,1	83,5	83,3	0,70	0,80	0,87	4,61	2870	82,2	84,4	84,3	0,64	0,75	0,82	4,43
3	4	2880	84,2	85,7	85,1	0,79	0,85	0,88	6,09	2910	82,6	85,0	85,5	0,74	0,82	0,87	5,61
4	5,5	2890	87,0	87,5	87,5	0,80	0,86	0,89	7,74	2915	85,0	87,4	88,2	0,73	0,82	0,86	7,34
5,5	7,5	2930	84,4	88,7	88,4	0,77	0,85	0,88	10,7	2945	83,5	86,8	88,1	0,72	0,81	0,86	10,1
7,5	10	2910	86,9	88,7	88,5	0,81	0,87	0,90	14,3	2930	86,4	88,8	89,2	0,75	0,83	0,87	13,4
11	15	2945	88,1	90,0	90,3	0,80	0,86	0,89	20,7	2955	87,5	89,4	91,3	0,75	0,83	0,87	19,3
15	20	2935	90,1	91,4	91,1	0,82	0,87	0,89	28,0	2960	89,4	91,2	91,9	0,74	0,82	0,88	25,8
18,5	25	2940	90,9	92,0	91,6	0,81	0,86	0,89	34,3	2960	90,5	92,7	92,6	0,74	0,82	0,87	31,9
22	30	2940	91,5	92,5	92,1	0,77	0,85	0,88	41,2	2960	90,7	92,2	92,5	0,71	0,80	0,86	38,5
30	40	2950	90,0	92,0	92,7	0,80	0,87	0,89	55,2	2965	89,5	91,7	92,5	0,75	0,84	0,87	51,9
37	50	2960	92,4	93,0	93,0	0,82	0,87	0,89	66,4	2965	91,0	92,4	93,0	0,73	0,82	0,86	62,4
45	60	2960	91,9	93,4	93,5	0,88	0,92	0,93	78,6	2970	91,5	93,3	93,9	0,83	0,91	0,92	72,5
55	75	2950	91,8	93,2	93,5	0,89	0,93	0,93	96,1	2965	92,0	93,5	94,0	0,86	0,89	0,93	87,5
75	100	2970	91,9	93,6	94,3	0,84	0,88	0,90	134	2980	91,0	93,2	94,2	0,79	0,85	0,88	126
90	125	2955	92,3	93,9	94,5	0,85	0,89	0,90	161	2975	91,5	94,1	94,5	0,79	0,86	0,89	149
110	150	2965	93,0	94,4	94,9	0,86	0,90	0,91	194	2980	91,9	94,4	94,8	0,81	0,87	0,89	181
132	180	2970	92,4	94,4	94,8	0,86	0,90	0,91	232	2975	92,5	94,8	95,2	0,82	0,89	0,90	214
160	220	2960	93,2	95,0	95,4	0,83	0,89	0,90	283	2980	93,0	95,0	95,3	0,78	0,85	0,88	265
IV Pole - 1500 min^{-1}																	
0,12	0,16	1360	46,0	54,0	58,0	0,48	0,59	0,68	0,46	1380	43,0	53,5	58,0	0,40	0,50	0,60	0,48
0,18	0,25	1370	55,8	60,5	60,7	0,62	0,72	0,80	0,56	1400	51,0	55,0	60,3	0,57	0,65	0,72	0,58
0,25	0,33	1400	71,8	73,8	73,5	0,53	0,65	0,72	0,72	1425	67,0	72,5	73,5	0,50	0,60	0,68	0,70
0,37	0,5	1390	70,0	73,0	73,5	0,52	0,65	0,75	1,02	1410	65,0	71,6	73,6	0,47	0,59	0,67	1,04
0,55	0,75	1410	68,0	73,0	74,0	0,62	0,74	0,81	1,39	1455	68,5	73,0	75,5	0,55	0,67	0,75	1,35
0,75	1	1400	76,9	78,5	77,5	0,67	0,79	0,86	1,71	1430	74,0	79,0	76,2	0,59	0,72	0,80	1,71
1,1	1,5	1420	78,2	80,8	80,5	0,64	0,74	0,81	2,56	1440	75,1	79,0	80,3	0,53	0,65	0,73	2,61
1,5	2	1400	81,2	82,4	81,0	0,71	0,80	0,86	3,27	1435	78,6	81,5	81,7	0,62	0,73	0,81	3,15
2,2	3	1420	80,0	81,7	81,2	0,67	0,81	0,86	4,79	1440	79,0	82,0	83,0	0,62	0,75	0,82	4,50
3	4	1410	84,0	85,7	84,2	0,73	0,83	0,88	6,15	1430	83,0	85,0	84,9	0,65	0,77	0,84	5,85
4	5,5	1430	86,5	88,0	86,7	0,74	0,84	0,89	7,88	1445	85,8	87,1	86,7	0,67	0,78	0,84	7,64
5,5	7,5	1460	86,7	88,4	88,5	0,76	0,82	0,87	10,9	1470	83,8	87,7	87,8	0,62	0,74	0,82	10,6
7,5	10	1460	88,0	89,2	88,8	0,75	0,84	0,88	14,6	1475	85,0	87,7	88,6	0,65	0,77	0,83	14,2
11	15	1460	88,3	89,6	89,2	0,74	0,82	0,85	22,0	1470	86,4	88,5	89,0	0,66	0,77	0,82	21,0
15	20	1450	90,3	91,0	90,1	0,76	0,84	0,86	29,4	1465	88,3	90,0	90,1	0,68	0,78	0,83	27,9
18,5	25	1470	90,8	92,2	92,1	0,68	0,80	0,84	36,3	1475	88,6	91,0	92,0	0,60	0,73	0,80	35,0
22	30	1465	92,0	92,2	92,3	0,73	0,80	0,84	43,1	1475	91,1	91,7	92,5	0,65	0,75	0,79	41,9
30	40	1470	92,2	93,0	92,6	0,78	0,84	0,86	57,2	1480	91,8	93,1	93,3	0,73	0,81	0,85	52,6
37	50	1475	92,2	92,4	92,5	0,79	0,86	0,89	68,3	1480	91,4	92,5	93,2	0,72	0,84	0,87	63,5
45	60	1470	91,3	92,8	93,5	0,83	0,88	0,89	82,2	1480	91,0	92,9	93,5	0,80	0,85	0,87	77,0
55	75	1475	92,6	93,5	93,4	0,83	0,88	0,91	98,3	1480	92,2	93,4	93,6	0,75	0,84	0,89	91,9
75	100	1480	92,8	94,1	94,4	0,85	0,89	0,90	134	1485	92,3	93,8	94,3	0,81	0,87	0,89	124
90	125	1480	92,6	94,1	94,2	0,82	0,88	0,90	161	1490	92,0	93,9	94,2	0,80	0,86	0,89	149
110	150	1480	92,8	93,6	94,2	0,80	0,85	0,88	202	1490	92,2	93,8	94,5	0,71	0,81	0,87	186
132	175	1480	93,5	94,9	95,1	0,81	0,87	0,89	237	1485	93,3	94,7	95,1	0,73	0,82	0,88	219
160	220	1480	93,0	95,0	95,4	0,81	0,86	0,88	290	1485	94,2	95,2	95,5	0,80	0,85	0,87	268

Notes:
- *The motors can also operate at a 60Hz supply. The change in performance data can be obtained directly from the local WEG representative.*
- *The values shown herewith are subjected to change without prior notice.*

ATOORSANAT

Non Sparking Multivoltage Motors
EEx nA IIC T3

Output KW	Output HP	Frame IEC	C_n (Nm)	I_l/I_n	T_l/T_n	T_b/T_n	Inertia J Kgm²	Allowable locket rortor time Hot/Cold (s)	Weight Kg	Sound dB (A)	400V rpm min^{-1}	% of full load Efficiency 50	Efficiency 75	Efficiency 100	Power Factor Cos 50	Power Factor Cos 75	Power Factor Cos 100	I_n (A)
VI Pole - 1000min^{-1}																		
0,12	0,16	63	1,25	4,80	2,2	2,1	0,00068	16/35	8	43	915	37,2	50,0	55,0	0,49	0,55	0,65	0,48
0,18	0,25	71	1,93	5,30	2,2	2,3	0,00079	16/35	11	43	890	41,0	51,0	57,0	0,48	0,57	0,62	0,74
0,25	0,33	71	2,68	5,20	2,1	2,0	0,00096	11/24	12	43	890	55,0	62,0	66,0	0,40	0,50	0,57	0,96
0,37	0,5	80	3,82	5,20	1,7	2,0	0,00225	7/15	14	43	925	60,0	64,0	67,8	0,48	0,62	0,65	1,21
0,55	0,75	80	5,71	5,30	2,1	2,2	0,00312	9/20	16	43	920	61,0	66,0	67,0	0,50	0,65	0,74	1,60
0,75	1	90S	7,92	5,20	1,9	2,0	0,00448	12/26	19	45	905	70,0	71,0	70,0	0,54	0,68	0,77	2,01
1,1	1,5	90L	11,4	4,80	2,3	2,2	0,00673	14/31	23	45	920	71,0	73,5	73,5	0,50	0,64	0,75	2,88
1,5	2	100L	15,2	4,80	2,2	2,5	0,01121	18/40	29	44	940	74,0	77,0	77,5	0,53	0,65	0,74	3,78
2,2	3	112M	22,4	5,00	2,2	2,3	0,01683	14/31	35	48	940	77,0	80,5	80,1	0,53	0,66	0,74	5,36
3	4	132S	30,2	5,30	1,9	2,2	0,03489	20/44	53	52	950	80,5	83,0	82,5	0,58	0,70	0,77	6,82
4	5,5	132M	40,7	6,00	2,1	2,2	0,05040	18/40	65	52	940	82,2	85,5	86,0	0,60	0,70	0,77	8,72
5,5	7,5	132M	54,7	6,40	2,2	2,4	0,06203	14/31	73	52	960	84,0	86,0	86,0	0,56	0,69	0,76	12,1
7,5	10	160M	73,9	6,40	2,3	2,9	0,12209	17/37	103	56	970	87,1	88,4	88,0	0,62	0,74	0,81	15,2
11	15	160L	108	6,70	2,4	2,6	0,17596	12/26	129	56	975	86,7	88,3	88,3	0,59	0,72	0,79	22,8
15	20	180L	149	7,50	2,5	2,6	0,30338	10/22	181	56	965	89,1	90,1	89,8	0,78	0,86	0,89	26,9
18,5	25	200L	181	6,00	2,3	2,5	0,37671	25/55	219	58	975	89,3	91,3	89,8	0,70	0,79	0,84	34,8
22	30	200L	216	6,30	2,3	2,6	0,41258	20/44	228	58	975	88,9	90,9	91,3	0,65	0,75	0,81	42,8
30	40	225S/M	291	6,80	2,5	2,6	0,98843	20/44	366	61	985	91,0	91,8	91,8	0,81	0,87	0,88	53,4
37	50	250S/M	361	7,90	2,4	2,4	1,22377	17/37	440	61	980	90,0	92,4	92,5	0,75	0,84	0,87	66,4
45	60	280S/M	437	6,80	2,4	2,5	2,29825	33/73	610	66	985	90,0	92,0	92,6	0,68	0,78	0,84	83,5
55	75	280S/M	534	6,30	2,2	2,5	2,64298	39/86	655	66	985	92,0	93,2	93,5	0,73	0,82	0,86	98,7
75	100	315S/M	728	6,70	2,2	2,3	3,10263	30/66	775	69	985	92,0	93,4	93,7	0,71	0,81	0,85	136
90	125	315S/M	873	6,40	2,1	2,2	3,67719	22/48	818	69	985	93,0	94,0	93,8	0,74	0,82	0,85	163
110	150	315S/M	1067	6,50	2,3	2,4	5,28597	33/73	990	69	985	93,5	94,5	94,6	0,69	0,79	0,84	200
VIII Pole - 750min^{-1}																		
0,12	0,16	71	1,64	4,20	1,9	2,1	0,00079	25/55	11	41	700	37,0	44,2	47,2	0,40	0,52	0,61	0,60
0,18	0,25	80	2,46	4,50	1,8	1,9	0,00242	8/18	14	42	700	41,0	51,0	54,2	0,40	0,53	0,62	0,77
0,25	0,33	80	3,41	4,10	1,8	1,8	0,00294	10/22	15	42	700	52,0	59,0	62,3	0,42	0,55	0,63	0,92
0,37	0,5	90S	5,16	4,50	2,3	2,4	0,00448	12/26	18	43	685	50,0	57,5	61,0	0,40	0,50	0,58	1,51
0,55	0,75	90L	7,62	5,10	2,3	2,2	0,00617	11/24	22	43	690	58,0	63,5	65,0	0,37	0,48	0,58	2,11
0,75	1	100L	10,2	4,60	2,0	2,1	0,01121	30/66	28	50	700	60,0	67,0	69,0	0,38	0,48	0,59	2,66
1,1	1,5	100L	15,0	4,20	1,5	2,1	0,01289	18/40	31	50	700	64,0	70,0	72,2	0,43	0,56	0,65	3,38
1,5	2	112M	20,2	5,50	2,4	2,9	0,02430	22/48	43	46	710	76,0	81,3	81,6	0,45	0,57	0,65	4,08
2,2	3	132S	29,6	6,20	2,4	2,7	0,07528	32/70	68	48	710	78,5	81,5	83,0	0,53	0,63	0,72	5,31
3	4	132M	40,4	5,80	2,3	2,4	0,08531	21/46	75	48	710	76,5	82,9	83,5	0,52	0,64	0,72	7,20
4	5,5	160M	52,4	5,40	2,3	3,1	0,12209	32/70	105	51	730	81,3	84,3	86,0	0,46	0,57	0,66	10,2
5,5	7,5	160M	72,0	5,40	2,4	3,2	0,14364	24/53	114	51	730	83,0	84,0	85,0	0,43	0,54	0,68	13,7
7,5	10	160L	98,8	5,00	2,1	2,8	0,16519	15/33	127	51	725	84,0	86,0	85,5	0,50	0,63	0,72	17,6
11	15	180L	145	6,80	2,2	2,4	0,30338	10/22	167	51	725	87,0	88,5	88,3	0,70	0,79	0,84	21,4
15	20	200L	198	5,00	2,0	2,1	0,37671	34/75	217	53	725	87,0	88,5	88,9	0,55	0,67	0,74	32,9
18,5	25	225S/M	240	6,90	2,1	2,5	0,84723	18/40	341	56	735	88,3	90,0	89,8	0,70	0,78	0,84	35,2
22	30	225S/M	288	7,50	2,2	2,2	0,98843	19/42	365	56	730	88,8	91,0	91,3	0,70	0,80	0,82	42,4
30	40	250S/M	393	6,80	2,1	2,4	1,22377	17/37	440	56	730	89,0	91,1	91,8	0,70	0,78	0,83	56,7
37	50	280S/M	481	6,80	2,0	2,0	2,29825	23/51	607	59	735	90,0	92,2	92,3	0,68	0,78	0,82	70,6
45	60	280S/M	581	6,90	1,9	2,0	2,64298	26/57	643	59	740	90,4	92,5	93,0	0,68	0,77	0,82	85,2
55	75	315S/M	715	6,50	1,9	2,0	3,10263	27/59	745	62	735	90,9	93,1	93,3	0,69	0,78	0,82	104
75	100	315S/M	968	7,10	1,6	2,0	4,36667	19/42	876	62	740	91,5	93,3	93,5	0,73	0,81	0,82	141
90	125	315S/M	1162	6,80	2,1	2,2	5,28597	28/62	970	62	740	91,6	93,8	94,4	0,70	0,78	0,83	166

آتور صنعت
ATOORSANAT

C_n = Full load torque
I/I_n = Locked rotor current
T_l/T_n = Locked rotor torque
T_b/T_n = Breakdown torque
I_n = Full load current

Standard voltage, connection and frequency:

220-240V △ 50Hz	380-415V △ 50Hz
380-415V Y 50Hz	660-690V Y 50Hz
440-480V Y 60Hz	440-480V △ 60Hz

آتور صنعت
ATOORSANAT

Output		380V								415V							
		rpm min^{-1}	% of full load						I_n (A)	rpm min^{-1}	% of full load						I_n (A)
			Efficiency			Power Factor Cos					Efficiency			Power Factor Cos			
KW	HP		50	75	100	50	75	100			50	75	100	50	75	100	
VI Pole - 1000min^{-1}																	
0,12	0,16	910	38,8	50,1	53,4	0,50	0,58	0,66	0,52	920	35,6	47,0	52,0	0,47	0,53	0,63	0,51
0,18	0,25	880	42,0	52,0	57,0	0,50	0,60	0,64	0,75	900	41,0	50,0	57,0	0,45	0,55	0,61	0,72
0,25	0,33	880	55,2	61,3	65,3	0,44	0,55	0,61	0,95	900	50,9	60,1	64,7	0,37	0,46	0,54	1,00
0,37	0,5	920	61,1	64,9	67,5	0,50	0,63	0,69	1,21	930	57,1	62,8	66,0	0,45	0,61	0,62	1,26
0,55	0,75	910	62,0	65,3	67,0	0,55	0,69	0,78	1,60	930	58,0	64,9	66,3	0,46	0,60	0,68	1,70
0,75	1	890	67,0	68,0	68,0	0,57	0,71	0,80	2,09	920	68,0	72,4	72,4	0,51	0,64	0,75	1,92
1,1	1,5	905	72,0	73,0	72,6	0,55	0,69	0,78	2,95	930	70,0	75,2	75,2	0,48	0,61	0,72	2,83
1,5	2	930	75,0	77,5	77,3	0,56	0,69	0,77	3,83	950	72,0	77,3	77,6	0,50	0,63	0,71	3,79
2,2	3	930	78,0	80,0	80,0	0,55	0,68	0,76	5,50	950	76,0	80,3	80,5	0,50	0,63	0,72	5,28
3	4	940	80,0	83,0	82,0	0,60	0,72	0,79	7,04	960	80,0	83,0	82,6	0,53	0,66	0,74	6,83
4	5,5	930	83,4	85,4	85,6	0,61	0,72	0,79	8,99	945	82,0	85,3	85,9	0,58	0,68	0,75	8,64
5,5	7,5	955	83,0	85,5	85,6	0,58	0,71	0,77	12,7	965	84,0	86,1	86,0	0,54	0,66	0,74	12,0
7,5	10	965	86,5	88,0	87,2	0,66	0,78	0,83	15,7	970	85,5	88,0	88,0	0,58	0,71	0,79	15,0
11	15	970	87,7	88,7	88,3	0,64	0,76	0,82	23,1	975	85,8	87,8	88,1	0,54	0,68	0,76	22,9
15	20	960	89,0	90,0	89,8	0,80	0,88	0,90	28,1	970	89,0	90,5	90,5	0,75	0,84	0,88	26,2
18,5	25	970	89,5	90,2	89,8	0,74	0,82	0,86	35,9	980	89,0	90,8	91,2	0,66	0,76	0,82	34,4
22	30	970	89,0	90,8	91,2	0,70	0,80	0,84	43,6	980	88,8	91,0	91,3	0,60	0,70	0,78	43,0
30	40	980	91,0	91,5	91,8	0,82	0,88	0,89	55,7	990	91,0	91,8	92,2	0,80	0,86	0,87	52,0
37	50	970	90,0	92,3	92,4	0,77	0,85	0,88	69,1	985	90,0	92,4	92,6	0,73	0,82	0,86	64,6
45	60	985	90,0	92,0	92,6	0,72	0,81	0,85	86,9	985	90,0	92,3	92,7	0,63	0,75	0,82	82,4
55	75	980	92,0	93,2	93,4	0,74	0,83	0,87	103	985	92,0	93,2	93,6	0,70	0,80	0,84	97,3
75	100	985	92,0	93,2	93,5	0,72	0,82	0,86	142	990	92,0	93,5	93,8	0,70	0,80	0,84	132
90	125	980	92,5	93,5	93,6	0,75	0,83	0,86	170	985	93,0	94,0	93,9	0,72	0,80	0,84	159
110	150	985	93,3	94,3	94,4	0,73	0,81	0,85	208	985	93,6	94,5	94,7	0,66	0,77	0,82	197
VIII Pole - 750min^{-1}																	
0,12	0,16	690	37,2	44,6	47,5	0,45	0,56	0,64	0,60	710	37,0	45,0	47,0	0,35	0,47	0,55	0,65
0,18	0,25	690	40,0	50,0	53,0	0,47	0,56	0,65	0,79	710	41,0	50,3	53,0	0,38	0,50	0,59	0,80
0,25	0,33	690	49,0	58,0	61,0	0,44	0,56	0,65	0,96	710	54,3	60,9	62,0	0,40	0,53	0,61	0,92
0,37	0,5	680	52,3	57,0	60,8	0,45	0,53	0,60	1,54	690	50,0	57,0	61,0	0,35	0,47	0,55	1,53
0,55	0,75	680	59,0	63,8	65,0	0,40	0,51	0,60	2,14	700	57,0	63,0	64,5	0,35	0,45	0,55	2,16
0,75	1	690	60,0	67,0	69,0	0,40	0,50	0,61	2,71	710	60,0	68,4	69,0	0,36	0,46	0,57	2,65
1,1	1,5	690	64,0	70,0	72,0	0,45	0,58	0,67	3,46	710	64,0	71,5	72,2	0,40	0,53	0,63	3,36
1,5	2	700	76,2	81,0	81,3	0,47	0,58	0,66	4,25	715	75,8	81,1	81,5	0,43	0,55	0,64	4,00
2,2	3	700	78,0	81,3	82,6	0,55	0,64	0,73	5,54	715	79,0	82,0	82,8	0,50	0,62	0,71	5,21
3	4	700	78,0	83,0	83,0	0,54	0,66	0,74	7,42	715	74,1	82,6	83,5	0,50	0,62	0,70	7,14
4	5,5	725	82,6	85,0	85,9	0,48	0,61	0,70	10,1	730	79,9	83,6	86,0	0,41	0,54	0,63	10,3
5,5	7,5	725	83,0	84,7	85,2	0,45	0,55	0,69	14,2	730	83,0	84,0	85,0	0,40	0,52	0,67	13,4
7,5	10	720	84,0	86,0	85,5	0,52	0,65	0,73	18,3	730	84,0	86,0	85,5	0,48	0,60	0,70	17,4
11	15	720	87,0	88,0	88,0	0,72	0,80	0,85	22,3	730	87,0	88,6	88,5	0,68	0,78	0,83	20,8
15	20	720	86,0	88,0	88,0	0,60	0,70	0,76	34,1	730	87,0	88,5	88,9	0,50	0,64	0,72	32,6
18,5	25	730	88,3	90,0	90,8	0,72	0,80	0,85	36,4	740	88,2	90,3	90,2	0,67	0,76	0,83	34,4
22	30	725	89,0	90,6	90,9	0,72	0,80	0,83	44,3	735	88,3	91,0	91,2	0,67	0,78	0,80	41,9
30	40	725	89,2	91,0	91,7	0,72	0,79	0,83	59,9	735	88,9	91,0	92,0	0,68	0,77	0,82	55,3
37	50	730	90,3	92,0	92,1	0,70	0,79	0,83	73,5	740	90,0	92,2	92,4	0,65	0,76	0,80	69,6
45	60	735	90,3	92,4	92,7	0,70	0,79	0,83	88,9	740	90,2	92,5	93,0	0,65	0,76	0,81	83,1
55	75	735	91,2	93,0	93,1	0,71	0,80	0,83	108	740	90,6	93,1	93,4	0,65	0,76	0,81	101
75	100	735	91,3	93,2	93,3	0,75	0,82	0,83	147	740	91,4	93,4	93,4	0,70	0,80	0,82	136
90	125	735	91,8	93,7	94,2	0,73	0,80	0,86	169	740	91,5	93,7	94,3	0,68	0,76	0,81	164

آتور صنعت
ATOORSANAT

Notes:
- *The motors can also operate at a 60Hz supply. The change in performance data can be obtained directly from the local WEG representative.*
- *The values shown herewith are subjected to change without prior notice.*

Non Sparking Premium Efficiency Multivoltage Motors
EEx nA IIC T3

Output KW	Output HP	Frame IEC	C_n (Nm)	I_l/I_n	T_l/T_n	T_b/T_n	Inertia J Kgm²	Allowable locket rortor time Hot/Cold (s)	Weight Kg	Sound dB (A)	400V rpm min^{-1}	% of full load Efficiency 50	Efficiency 75	Efficiency 100	Power Factor Cos 50	Power Factor Cos 75	Power Factor Cos 100	I_n (A)
II Pole - 3000 min^{-1}																		
0,18	0,25	63	0,63	4,40	2,5	2,7	0,00012	31/68	7	52	2730	63,0	68,0	69,5	0,65	0,77	0,81	0,46
0,25	0,33	63	0,87	4,60	2,4	2,8	0,00016	22/48	7	52	2730	62,1	68,0	71,2	0,55	0,69	0,77	0,66
0,37	0,5	71	1,27	5,50	2,4	2,8	0,00033	23/51	10	56	2780	68,0	73,8	74,5	0,66	0,78	0,85	0,84
0,55	0,75	71	1,89	5,70	2,7	2,7	0,00045	16/35	11	56	2780	71,0	75,5	76,7	0,70	0,80	0,86	1,20
0,75	1	80	2,59	6,00	2,8	2,8	0,00079	18/40	14	59	2770	74,2	77,5	79,2	0,71	0,82	0,85	1,61
1,1	1,5	80	3,73	7,20	3,2	3,3	0,00096	10/22	16	59	2815	81,7	83,3	82,8	0,67	0,78	0,85	2,26
1,5	2	90S	5,02	7,30	2,5	2,8	0,00205	14/31	20	65	2855	83,2	84,8	84,5	0,68	0,80	0,85	3,01
2,2	3	90L	7,36	8,00	2,8	3,0	0,00242	7/15	22	68	2855	84,0	86,3	86,0	0,64	0,77	0,84	4,40
3	4	100L	9,92	8,20	2,6	3,0	0,00616	8/18	31	67	2890	83,3	86,7	87,1	0,72	0,82	0,87	5,71
4	5,5	112M	13,2	8,20	2,4	3,1	0,00842	10/22	46	64	2900	87,0	88,4	88,6	0,72	0,83	0,87	7,49
5,5	7,5	132S	17,9	8,00	2,4	3,0	0,02056	19/42	62	68	2940	88,3	90,0	90,1	0,71	0,81	0,86	10,2
7,5	10	132S	24,5	8,00	2,3	2,9	0,02430	8/18	68	68	2920	89,0	90,6	90,8	0,72	0,82	0,87	13,7
11	15	160M	35,6	8,50	2,3	3,0	0,05295	12/26	110	70	2950	90,5	92,0	92,3	0,74	0,80	0,84	20,5
15	20	160M	48,8	8,20	2,4	2,9	0,05883	11/24	115	70	2935	91,0	91,8	92,5	0,74	0,82	0,85	27,5
18,5	25	160L	60,0	8,80	2,3	2,7	0,06766	11/24	136	70	2945	91,9	92,8	93,1	0,74	0,83	0,85	33,7
22	30	180M	71,3	8,60	2,8	2,7	0,15082	9/20	180	70	2950	92,5	93,6	93,7	0,76	0,85	0,87	39,0
30	40	200L	97,0	7,40	2,7	2,4	0,20630	13/29	245	74	2955	92,8	93,7	94,0	0,84	0,88	0,89	51,8
37	50	200L	119	8,30	2,6	2,6	0,22424	16/35	260	74	2960	93,0	94,0	94,3	0,71	0,81	0,87	65,1
45	60	225S/M	145	8,50	2,4	2,9	0,39464	16/35	385	78	2960	93,6	94,5	94,7	0,82	0,88	0,90	76,2
55	75	250S/M	178	8,30	2,3	3,0	0,52021	18/40	470	78	2960	94,3	95,1	95,0	0,85	0,89	0,91	91,8
75	100	280S/M	241	7,10	1,6	2,6	1,12963	36/79	680	79	2975	93,0	94,4	95,0	0,81	0,86	0,88	129
90	125	280S/M	289	8,20	1,8	2,7	1,41204	33/73	740	79	2975	94,4	95,5	95,8	0,83	0,87	0,89	152
110	150	315S/M	353	8,00	1,8	2,6	1,50617	38/84	830	81	2975	94,4	95,4	95,8	0,82	0,87	0,89	186
132	175	315S/M	424	8,30	1,9	2,6	1,74151	32/70	900	81	2975	94,3	95,5	96,0	0,80	0,86	0,89	223
160	220	315S/M	514	7,40	2,0	2,6	2,11806	37/81	990	81	2975	95,1	96,0	96,2	0,84	0,89	0,90	267
IV Pole - 1500 min^{-1}																		
0,18	0,25	63	1,23	4,60	2,1	2,4	0,00056	19/42	8	44	1400	56,0	64,0	67,5	0,43	0,55	0,66	0,58
0,25	0,33	71	1,71	5,00	3,0	3,1	0,00079	32/70	11	43	1400	69,0	73,5	75,0	0,52	0,64	0,71	0,68
0,37	0,5	71	2,54	5,00	2,7	2,8	0,00079	36/79	11	43	1390	64,0	72,0	75,0	0,38	0,50	0,68	1,05
0,55	0,75	80	3,65	5,70	2,5	2,7	0,00242	20/44	14	44	1440	72,0	77,0	78,0	0,57	0,70	0,77	1,32
0,75	1	80	5,06	5,50	2,4	2,6	0,00294	17/37	16	44	1415	77,0	78,5	80,1	0,62	0,75	0,82	1,65
1,1	1,5	90S	7,22	7,50	2,5	2,7	0,00504	14/31	23	47	1455	78,0	83,3	83,8	0,53	0,65	0,73	2,60
1,5	2	90L	9,85	7,50	2,8	3,3	0,00672	9/20	24	47	1455	81,0	84,6	85,2	0,54	0,68	0,78	3,26
2,2	3	100L	14,8	7,40	2,7	2,9	0,00842	9/20	33	51	1425	84,9	86,4	86,4	0,64	0,77	0,83	4,44
3	4	100L	20,0	8,30	2,9	3,3	0,01225	7/15	45	51	1430	84,0	86,3	87,5	0,63	0,76	0,84	5,89
4	5,5	112M	26,4	6,60	2,0	2,6	0,01875	8/18	49	55	1445	87,1	88,3	88,6	0,66	0,77	0,83	7,85
5,5	7,5	132S	35,9	8,50	2,3	3,1	0,04652	10/22	66	58	1465	88,0	89,6	90,1	0,62	0,76	0,83	10,6
7,5	10	132M	49,1	8,20	2,2	2,9	0,05427	7/15	76	58	1460	88,0	90,0	90,4	0,70	0,81	0,86	13,9
11	15	160M	72,0	6,00	2,0	2,3	0,09535	19/42	125	62	1460	90,3	91,6	91,2	0,68	0,78	0,83	21,0
15	20	160L	97,8	6,10	2,0	2,4	0,11542	11/24	130	62	1465	90,0	91,9	91,8	0,66	0,77	0,83	28,4
18,5	25	180M	120	8,10	2,7	2,8	0,17939	11/24	175	64	1470	91,6	93,0	93,4	0,65	0,77	0,82	34,9
22	30	180L	143	8,60	2,8	2,9	0,21527	11/24	195	64	1475	92,2	93,5	93,7	0,71	0,81	0,86	39,4
30	40	200L	194	7,00	2,4	2,6	0,33095	18/40	240	67	1475	93,0	94,0	93,9	0,67	0,78	0,83	55,6
37	50	225S/M	240	7,20	2,2	2,7	0,62988	14/31	365	70	1475	93,0	94,0	94,1	0,75	0,84	0,87	65,2
45	60	225S/M	292	7,40	2,3	2,8	0,83984	12/26	400	70	1475	93,9	94,4	94,4	0,80	0,86	0,89	77,3
55	75	250S/M	356	7,40	2,3	2,8	1,15478	20/44	450	70	1475	94,1	94,7	94,6	0,76	0,85	0,89	94,3
75	100	280S/M	483	7,20	2,2	2,4	2,16799	21/46	660	74	1485	93,9	95,1	95,2	0,79	0,85	0,88	129
90	125	280S/M	579	7,80	2,4	2,6	2,81036	22/48	795	74	1485	94,3	95,1	95,3	0,79	0,85	0,88	155
110	150	315S/M	708	7,60	2,4	2,6	3,21184	29/64	860	77	1485	94,5	95,2	95,6	0,80	0,86	0,88	189
132	175	315S/M	849	7,80	2,4	2,6	3,77391	34/75	995	77	1485	94,9	95,4	95,7	0,81	0,87	0,89	224
160	220	315S/M	1029	7,60	2,4	2,7	3,77391	18/40	1000	77	1485	94,3	95,6	95,9	0,77	0,84	0,87	277

C_n = Full load torque
I_l/I_n = Locked rotor current
T_l/T_n = Locked rotor torque
T_b/T_n = Breakdown torque
I_n = Full load current

Standard voltage, connection and frequency:

220-240V △ 50Hz	380-415V △ 50Hz
380-415V Y 50Hz	660-690V Y 50Hz
440-480V Y 60Hz	440-480V △ 60Hz

آتور صنعت
ATOORSANAT

Output		380V								415V							
		rpm	% of full load						I_n	rpm	% of full load						I_n
			Efficiency			Power Factor Cos					Efficiency			Power Factor Cos			
KW	HP	min^{-1}	50	75	100	50	75	100	(A)	min^{-1}	50	75	100	50	75	100	(A)
II Pole - 3000 min^{-1}																	
0,18	0,25	2700	61,0	66,0	68,0	0,69	0,79	0,83	0,49	2760	62,0	68,5	70,5	0,60	0,74	0,78	0,46
0,25	0,33	2700	60,0	65,0	70,0	0,58	0,75	0,80	0,68	2800	62,0	69,0	71,9	0,54	0,66	0,75	0,65
0,37	0,5	2760	68,0	73,8	74,3	0,69	0,80	0,88	0,86	2800	68,0	73,8	74,0	0,63	0,75	0,82	0,85
0,55	0,75	2750	71,0	75,8	76,5	0,75	0,82	0,88	1,24	2820	71,0	75,0	76,6	0,64	0,77	0,84	1,19
0,75	1	2750	73,5	76,5	79,0	0,75	0,84	0,87	1,66	2800	74,0	77,6	79,2	0,67	0,78	0,82	1,61
1,1	1,5	2800	81,8	83,0	82,8	0,71	0,82	0,87	2,32	2825	81,3	83,2	82,8	0,61	0,75	0,83	2,23
1,5	2	2845	83,0	84,3	84,3	0,71	0,83	0,87	3,11	2865	83,0	84,9	84,4	0,63	0,76	0,83	2,98
2,2	3	2850	84,5	86,3	86,0	0,70	0,81	0,86	4,52	2860	84,0	86,0	86,0	0,58	0,73	0,82	4,34
3	4	2880	83,5	86,7	87,0	0,76	0,85	0,88	5,95	2900	83,0	86,7	87,3	0,65	0,80	0,86	5,56
4	5,5	2885	86,7	88,0	88,3	0,77	0,85	0,89	7,73	2910	86,7	88,3	88,5	0,65	0,82	0,86	7,31
5,5	7,5	2930	89,0	90,3	90,2	0,75	0,83	0,87	10,6	2950	88,0	89,8	90,0	0,70	0,78	0,84	10,1
7,5	10	2915	88,9	90,5	90,6	0,74	0,83	0,88	14,3	2920	88,5	90,7	90,9	0,70	0,80	0,86	13,3
11	15	2945	90,3	91,9	92,2	0,76	0,81	0,85	21,3	2955	90,2	92,0	92,2	0,70	0,79	0,83	20,0
15	20	2930	90,9	91,7	92,4	0,76	0,83	0,86	28,7	2935	90,7	91,6	92,4	0,71	0,81	0,84	26,9
18,5	25	2940	92,0	92,8	93,0	0,76	0,84	0,87	34,7	2950	91,6	92,7	93,0	0,70	0,81	0,83	33,3
22	30	2945	92,9	93,7	93,7	0,78	0,86	0,89	40,1	2955	92,0	93,2	93,4	0,74	0,82	0,85	38,6
30	40	2950	92,7	93,6	93,8	0,86	0,89	0,90	54,0	2960	92,8	93,7	94,1	0,82	0,87	0,88	50,4
37	50	2955	93,3	94,0	94,2	0,72	0,82	0,87	68,6	2960	93,0	94,0	94,3	0,70	0,80	0,86	63,5
45	60	2955	93,9	94,5	94,5	0,84	0,89	0,91	79,5	2965	93,3	94,4	94,6	0,80	0,87	0,89	74,4
55	75	2955	94,2	94,7	94,7	0,86	0,90	0,92	95,9	2960	94,1	95,1	95,0	0,83	0,88	0,90	89,5
75	100	2970	93,0	94,4	95,0	0,83	0,87	0,88	136	2975	93,0	94,4	95,0	0,80	0,85	0,87	125
90	125	2970	94,3	95,5	95,8	0,84	0,88	0,90	159	2975	94,3	95,5	95,8	0,81	0,86	0,88	149
110	150	2970	94,4	95,5	95,8	0,84	0,88	0,90	194	2975	94,4	95,4	95,8	0,80	0,86	0,88	182
132	175	2970	94,3	95,5	96,0	0,80	0,87	0,89	235	2975	94,3	95,5	96,0	0,78	0,85	0,88	217
160	220	2970	94,9	95,9	96,1	0,86	0,89	0,90	281	2975	95,0	96,0	96,2	0,82	0,88	0,89	260
IV Pole - 1500 min^{-1}																	
0,18	0,25	1390	56,0	63,0	66,0	0,45	0,57	0,68	0,61	1410	55,0	64,0	67,0	0,41	0,53	0,64	0,58
0,25	0,33	1385	68,0	70,0	74,1	0,56	0,68	0,75	0,68	1425	70,0	73,9	75,5	0,48	0,60	0,68	0,68
0,37	0,5	1370	64,0	72,0	74,5	0,40	0,52	0,70	1,08	1410	64,0	72,0	75,0	0,36	0,47	0,66	1,04
0,55	0,75	1410	71,0	76,0	77,0	0,62	0,74	0,80	1,36	1455	72,0	76,5	78,3	0,53	0,67	0,75	1,30
0,75	1	1400	76,5	78,5	80,0	0,66	0,78	0,84	1,70	1430	77,0	78,5	80,0	0,58	0,72	0,80	1,63
1,1	1,5	1450	81,5	83,8	83,8	0,56	0,70	0,77	2,59	1460	75,0	83,0	83,5	0,47	0,62	0,69	2,66
1,5	2	1450	81,0	84,6	85,0	0,55	0,69	0,79	3,39	1460	81,0	84,5	85,0	0,53	0,66	0,77	3,19
2,2	3	1420	85,2	86,3	86,4	0,70	0,81	0,86	4,52	1430	84,0	86,2	86,4	0,60	0,73	0,81	4,38
3	4	1425	84,3	86,5	87,3	0,67	0,80	0,86	6,07	1440	84,0	86,0	87,4	0,60	0,72	0,81	5,90
4	5,5	1440	87,0	88,0	88,3	0,70	0,80	0,85	8,10	1450	86,9	88,2	88,6	0,62	0,74	0,81	7,75
5,5	7,5	1460	88,2	89,5	90,0	0,68	0,80	0,85	10,9	1470	87,5	89,4	89,9	0,55	0,72	0,81	10,5
7,5	10	1455	88,0	89,8	90,3	0,75	0,84	0,88	14,3	1465	88,0	89,9	90,3	0,62	0,78	0,84	13,8
11	15	1450	90,9	91,5	91,0	0,72	0,81	0,85	21,6	1470	90,0	91,6	91,3	0,65	0,75	0,81	20,7
15	20	1460	90,0	91,9	91,8	0,71	0,80	0,84	29,6	1470	90,0	91,9	91,8	0,60	0,74	0,82	27,7
18,5	25	1465	91,8	93,0	93,3	0,70	0,80	0,84	35,9	1475	91,3	92,9	93,3	0,60	0,74	0,80	34,5
22	30	1470	92,2	93,4	93,5	0,75	0,84	0,87	41,1	1475	92,0	93,4	93,6	0,67	0,78	0,85	38,5
30	40	1475	93,5	94,1	93,9	0,71	0,81	0,85	57,1	1480	92,5	93,9	93,8	0,63	0,75	0,81	54,9
37	50	1475	92,9	94,0	94,0	0,79	0,86	0,88	68,0	1480	92,5	93,9	93,9	0,70	0,82	0,86	63,7
45	60	1475	94,0	94,3	94,2	0,82	0,88	0,90	80,6	1480	93,8	94,2	94,4	0,77	0,85	0,88	75,4
55	75	1475	94,2	94,6	94,5	0,79	0,87	0,90	98,3	1480	94,0	94,7	94,7	0,74	0,84	0,88	91,8
75	100	1480	93,5	94,8	95,0	0,81	0,87	0,88	136	1485	93,8	95,0	95,2	0,77	0,84	0,87	126
90	125	1485	94,4	95,1	95,2	0,81	0,87	0,89	161	1485	94,1	95,0	95,3	0,77	0,84	0,87	151
110	150	1480	94,6	95,1	95,4	0,82	0,87	0,89	197	1485	94,0	95,1	95,6	0,78	0,85	0,88	182
132	175	1480	94,9	95,3	95,6	0,83	0,88	0,89	236	1485	94,7	95,3	95,7	0,78	0,86	0,88	218
160	220	1480	94,3	95,5	95,8	0,80	0,86	0,88	288	1485	94,2	95,6	95,9	0,75	0,82	0,85	273

آتور صنعت
ATOORSANAT

Notes:
- *The motors can also operate at a 60Hz supply. The change in performance data can be obtained directly from the local WEG representative.*
- *The values shown herewith are subjected to change without prior notice.*

Non Sparking Premium Efficiency Multivoltage Motors
EEx nA IIC T3

Output KW	Output HP	Frame IEC	C_n (Nm)	I_l/I_n	T_l/T_n	T_b/T_n	Inertia J Kgm²	Allowable locket rortor time Hot/Cold (s)	Weight Kg	Sound dB (A)	400V rpm min^{-1}	% of full load Efficiency 50	Efficiency 75	Efficiency 100	Power Factor Cos 50	Power Factor Cos 75	Power Factor Cos 100	I_n (A)
VI Pole - 1000 min^{-1}																		
0,18	0,25	71	1,93	5,50	2,2	2,3	0,00079	15/33	11	43	890	44,5	57,0	61,0	0,45	0,55	0,61	0,70
0,25	0,33	71	2,68	5,20	2,1	2,1	0,00096	11/24	12	43	890	55,0	65,5	69,5	0,39	0,48	0,55	0,94
0,37	0,5	80	3,82	5,20	1,7	2,1	0,00225	7/15	14	43	925	63,7	68,0	70,5	0,44	0,60	0,65	1,17
0,55	0,75	80	5,71	5,30	2,1	2,2	0,00311	9/20	16	43	920	65,0	69,5	70,8	0,48	0,64	0,72	1,56
0,75	1	90S	7,87	5,30	2,1	2,1	0,00448	8/18	19	45	910	70,5	73,3	73,9	0,48	0,63	0,71	2,06
0,75	1	90S	7,87	5,30	2,1	2,1	0,00448	8/18	19	45	910	70,5	73,3	73,9	0,48	0,63	0,71	2,06
1,1	1,5	90L	11,4	5,50	2,3	2,3	0,00672	8/18	23	45	920	70,0	72,6	74,9	0,48	0,59	0,65	3,26
1,5	2	100L	15,2	5,50	2,1	2,2	0,01121	10/22	29	44	940	74,0	79,5	80,1	0,50	0,60	0,70	3,86
2,2	3	112M	22,6	5,50	2,1	2,1	0,01682	9/20	39	48	930	73,5	80,9	83,0	0,43	0,58	0,68	5,63
3	4	132S	30,7	6,00	2,3	2,4	0,03489	13/29	56	52	935	80,0	85,0	86,5	0,56	0,67	0,74	6,76
4	5,5	132M	40,7	6,50	2,3	2,5	0,05039	14/31	68	52	940	84,0	86,6	87,2	0,57	0,70	0,76	8,71
5,5	7,5	132M	55,6	6,80	2,1	2,4	0,06202	11/24	79	52	945	83,3	86,5	87,6	0,58	0,70	0,76	11,9
7,5	10	160M	73,9	6,60	2,3	2,9	0,12209	16/35	106	56	970	87,0	89,2	90,0	0,63	0,74	0,81	14,8
11	15	160L	108	7,00	2,2	2,5	0,17595	12/26	136	56	975	89,6	90,5	90,3	0,59	0,72	0,79	22,3
15	20	180L	149	7,30	2,5	2,6	0,30337	10/22	183	56	965	91,0	91,9	91,6	0,79	0,86	0,89	26,6
18,5	25	200L	181	6,50	2,3	2,5	0,37670	25/55	224	58	975	90,7	92,7	92,9	0,69	0,77	0,84	34,2
22	30	200L	216	7,00	2,3	2,6	0,41258	20/44	235	58	975	91,0	92,6	92,9	0,65	0,75	0,82	41,7
30	40	225S/M	291	7,00	2,5	2,6	0,98842	17/37	366	61	985	91,3	93,0	93,5	0,75	0,81	0,85	54,5
37	50	250S/M	361	7,00	2,3	2,4	1,22377	20/44	450	61	980	91,8	94,0	94,0	0,75	0,81	0,82	69,7
45	60	280S/M	439	7,20	2,4	2,7	2,29824	17/37	610	66	980	91,5	93,4	94,2	0,68	0,78	0,83	83,3
55	75	280S/M	534	7,00	2,3	2,5	2,64298	24/53	655	66	985	92,3	93,9	94,3	0,65	0,76	0,81	104
75	100	315S/M	728	6,80	2,2	2,4	3,10263	24/53	725	69	985	92,8	94,0	94,5	0,75	0,81	0,84	136
90	125	315S/M	873	6,50	2,1	2,1	4,02193	22/48	810	69	985	92,7	94,2	94,8	0,72	0,80	0,83	165
110	150	315S/M	1067	6,80	2,3	2,4	5,28596	27/59	980	69	985	93,5	94,8	95,1	0,69	0,79	0,84	199
VIII Pole - 750 min^{-1}																		
0,18	0,25	80	2,46	4,50	1,8	1,9	0,00242	8/18	14	42	700	44,2	53,9	56,3	0,43	0,53	0,60	0,77
0,25	0,33	80	3,41	4,10	1,8	1,8	0,00294	10/22	15	42	700	53,6	61,6	64,3	0,41	0,54	0,61	0,92
0,37	0,5	90S	5,16	4,50	2,3	2,4	0,00448	12/26	18	43	685	53,5	61,3	64,0	0,40	0,50	0,56	1,49
0,55	0,75	90L	7,62	5,20	2,0	2,2	0,00616	11/24	21	43	690	60,0	64,0	66,3	0,40	0,52	0,60	2,00
0,75	1	100L	10,2	4,60	1,8	2,1	0,00952	16/35	27	50	700	70,0	74,2	76,0	0,40	0,53	0,61	2,34
1,1	1,5	100L	15,0	4,20	1,5	2,1	0,01289	18/40	30	50	700	70,5	74,5	77,0	0,41	0,54	0,63	3,27
1,5	2	112M	20,2	5,70	2,2	2,8	0,02430	17/37	45	46	710	79,5	81,1	82,0	0,45	0,57	0,66	4,00
2,2	3	132S	29,6	7,00	2,4	2,7	0,07527	19/42	70	48	710	82,2	84,0	84,6	0,50	0,61	0,70	5,36
3	4	132M	40,4	6,00	2,3	2,4	0,08531	21/46	78	48	710	84,0	85,8	86,3	0,52	0,65	0,73	6,87
4	5,5	160M	52,7	5,60	2,2	2,9	0,12209	24/53	110	51	725	84,6	86,0	86,6	0,46	0,57	0,66	10,1
5,5	7,5	160M	72,5	5,60	2,3	2,8	0,14364	20/44	126	51	725	84,3	86,5	87,0	0,42	0,55	0,65	14,0
7,5	10	160L	98,8	5,20	2,0	2,6	0,16518	15/33	130	51	725	85,6	88,2	89,0	0,46	0,59	0,68	17,9
11	15	180L	145	7,00	2,2	2,4	0,30337	10/22	183	51	725	86,5	88,5	89,0	0,61	0,73	0,78	22,9
15	20	200L	198	5,30	2,0	2,2	0,37670	33/73	225	53	725	88,0	89,8	90,3	0,50	0,63	0,70	34,3
18,5	25	225S/M	240	7,00	2,1	2,5	0,84722	16/35	340	56	735	90,3	91,1	91,9	0,70	0,79	0,84	34,6
22	30	225S/M	288	7,30	2,5	2,5	0,98842	19/42	365	56	730	90,8	92,1	92,5	0,70	0,79	0,82	41,9
30	40	250S/M	393	7,00	2,1	2,4	1,22377	17/37	440	56	730	91,5	92,5	93,0	0,70	0,78	0,83	56,1
37	50	280S/M	481	6,50	2,0	2,0	2,29824	23/51	590	59	735	92,6	93,5	93,9	0,68	0,78	0,82	69,4
45	60	280S/M	581	7,00	1,9	2,0	2,64298	26/57	630	59	740	92,9	93,7	94,0	0,58	0,70	0,76	91,0
55	75	315S/M	715	6,50	2,0	2,0	3,44737	27/59	730	62	735	93,6	94,5	94,5	0,69	0,78	0,82	102
75	100	315S/M	968	7,00	1,9	2,0	4,36666	19/42	860	62	740	94,0	94,7	94,9	0,73	0,81	0,83	138
90	125	315S/M	1162	6,80	2,1	2,2	5,28596	28/62	960	62	740	93,9	94,7	95,0	0,70	0,78	0,84	163

آتور صنعت
ATOORSANAT

C_n = Full load torque
I_l/I_n = Locked rotor current
T_l/T_n = Locked rotor torque
T_b/T_n = Breakdown torque
I_n = Full load current

Standard voltage, connection and frequency:

220-240V △ 50Hz	380-415V △ 50Hz
380-415V Y 50Hz	660-690V Y 50Hz
440-480V Y 60Hz	440-480V △ 60Hz

آتور صنعت
ATOORSANAT

Output		380V								415V							
		rpm min^{-1}	% of full load						I_n (A)	rpm min^{-1}	% of full load						I_n (A)
			Efficiency			Power Factor Cos					Efficiency			Power Factor Cos			
KW	HP		50	75	100	50	75	100			50	75	100	50	75	100	
VI Pole - 1000 min^{-1}																	
0,18	0,25	880	45,0	57,5	61,0	0,48	0,58	0,63	0,71	900	44,0	57,0	61,1	0,42	0,53	0,60	0,68
0,25	0,33	880	55,0	64,0	69,0	0,40	0,53	0,59	0,93	900	53,5	64,3	68,8	0,37	0,44	0,53	0,95
0,37	0,5	920	64,0	68,5	70,0	0,48	0,63	0,69	1,16	930	61,0	67,0	70,0	0,40	0,58	0,62	1,19
0,55	0,75	910	65,0	68,5	70,5	0,53	0,67	0,76	1,56	930	60,0	68,9	71,0	0,44	0,60	0,66	1,63
0,75	1	900	70,0	73,0	73,8	0,50	0,64	0,72	2,14	920	69,0	72,8	73,6	0,45	0,62	0,70	2,03
0,75	1	900	70,0	73,0	73,8	0,50	0,64	0,72	2,14	920	69,0	72,8	73,6	0,45	0,62	0,70	2,03
1,1	1,5	910	70,0	72,5	74,8	0,50	0,60	0,67	3,33	930	69,5	72,5	74,9	0,45	0,55	0,62	3,30
1,5	2	930	74,5	79,5	80,0	0,53	0,65	0,72	3,96	950	73,5	79,4	80,2	0,45	0,55	0,68	3,83
2,2	3	920	74,0	81,0	82,8	0,47	0,60	0,70	5,77	940	73,0	80,5	82,8	0,40	0,53	0,65	5,69
3	4	930	80,0	84,9	86,0	0,60	0,69	0,75	7,07	940	80,0	84,8	86,2	0,53	0,65	0,73	6,63
4	5,5	930	84,2	86,8	87,2	0,60	0,72	0,78	8,94	945	83,5	86,4	87,1	0,54	0,67	0,74	8,63
5,5	7,5	940	83,6	86,6	87,6	0,60	0,71	0,77	12,3	950	83,0	86,5	87,6	0,55	0,68	0,75	11,6
7,5	10	965	86,9	89,0	89,9	0,66	0,77	0,82	15,5	970	87,0	89,5	90,0	0,58	0,71	0,80	14,5
11	15	970	89,9	90,5	90,3	0,64	0,76	0,81	22,8	975	89,3	90,0	90,3	0,54	0,68	0,76	22,3
15	20	960	91,0	91,8	91,6	0,80	0,88	0,90	27,6	970	91,0	91,8	91,6	0,77	0,85	0,88	25,9
18,5	25	970	90,6	92,6	92,9	0,72	0,80	0,85	35,6	980	90,5	92,8	93,0	0,65	0,75	0,82	33,7
22	30	970	91,0	92,5	92,9	0,70	0,78	0,84	42,8	980	91,0	92,5	92,9	0,60	0,72	0,80	41,2
30	40	980	91,2	92,9	93,4	0,77	0,83	0,86	56,7	990	91,0	92,9	93,5	0,70	0,80	0,84	53,1
37	50	970	91,5	94,0	94,0	0,77	0,83	0,84	71,6	985	91,6	94,1	93,9	0,72	0,79	0,80	68,7
45	60	980	92,0	93,3	94,1	0,71	0,80	0,84	86,8	985	91,0	93,2	94,0	0,65	0,76	0,82	81,3
55	75	980	92,5	93,9	94,2	0,68	0,77	0,82	108	985	92,0	93,5	94,2	0,60	0,74	0,80	102
75	100	980	93,0	94,0	94,5	0,77	0,83	0,85	142	985	92,5	94,0	94,4	0,72	0,79	0,83	133
90	125	980	92,9	94,3	94,8	0,74	0,81	0,84	172	985	92,5	94,1	94,8	0,69	0,78	0,82	161
110	150	980	93,6	94,8	95,1	0,73	0,81	0,85	207	985	93,3	94,8	95,2	0,66	0,77	0,83	194
VIII Pole - 750 min^{-1}																	
0,18	0,25	690	44,0	53,3	55,5	0,45	0,55	0,63	0,78	710	43,9	53,0	56,3	0,40	0,50	0,57	0,78
0,25	0,33	690	52,0	61,0	63,8	0,43	0,55	0,63	0,95	710	56,5	62,5	64,2	0,40	0,52	0,59	0,92
0,37	0,5	680	55,0	61,0	63,5	0,44	0,52	0,58	1,53	690	52,0	61,0	64,0	0,35	0,47	0,54	1,49
0,55	0,75	680	60,0	64,0	66,0	0,45	0,53	0,61	2,08	700	60,0	64,0	66,0	0,37	0,50	0,58	2,00
0,75	1	690	71,5	74,0	75,5	0,44	0,54	0,62	2,43	710	70,0	74,0	76,0	0,38	0,51	0,60	2,29
1,1	1,5	690	71,0	74,5	76,9	0,43	0,56	0,65	3,34	710	70,0	74,0	77,0	0,39	0,51	0,61	3,26
1,5	2	700	79,8	81,0	82,0	0,47	0,58	0,68	4,09	715	79,3	80,8	81,8	0,43	0,55	0,63	4,05
2,2	3	700	82,5	84,0	84,6	0,51	0,63	0,71	5,56	715	81,6	83,9	84,4	0,48	0,59	0,69	5,26
3	4	700	84,3	86,0	86,3	0,54	0,66	0,74	7,14	715	84,0	85,5	86,2	0,50	0,63	0,72	6,72
4	5,5	720	84,5	86,0	86,5	0,48	0,61	0,70	10,0	730	84,4	86,0	86,6	0,41	0,54	0,63	10,2
5,5	7,5	720	84,2	86,6	87,0	0,46	0,60	0,70	13,7	730	84,1	86,4	87,0	0,38	0,50	0,60	14,7
7,5	10	720	85,5	88,2	89,0	0,50	0,64	0,72	17,8	730	85,4	88,1	89,0	0,41	0,54	0,64	18,3
11	15	720	86,7	88,5	89,0	0,63	0,75	0,79	23,8	730	86,3	88,5	89,0	0,60	0,70	0,77	22,3
15	20	720	88,0	89,8	90,3	0,52	0,65	0,71	35,5	730	88,0	89,7	90,3	0,48	0,60	0,68	34,0
18,5	25	730	90,3	91,0	91,8	0,73	0,81	0,85	36,0	740	90,0	91,0	91,8	0,67	0,77	0,83	33,8
22	30	725	90,9	92,0	92,5	0,72	0,80	0,83	43,5	730	90,5	92,0	92,4	0,67	0,78	0,81	40,9
30	40	725	91,5	92,5	93,0	0,73	0,80	0,84	58,3	735	91,0	92,5	93,0	0,65	0,77	0,82	54,7
37	50	730	92,5	93,5	93,8	0,70	0,80	0,83	72,2	740	92,4	93,4	93,8	0,65	0,76	0,81	67,7
45	60	735	92,8	93,6	94,0	0,63	0,74	0,79	92,1	740	92,5	93,7	94,1	0,53	0,65	0,73	91,1
55	75	735	93,8	94,3	94,4	0,71	0,80	0,83	107	740	93,5	94,5	94,6	0,65	0,75	0,81	100
75	100	735	94,0	94,7	94,8	0,75	0,82	0,84	144	740	94,0	94,7	94,9	0,70	0,80	0,82	135
90	125	735	94,0	94,8	95,0	0,73	0,80	0,86	167	740	93,6	94,6	95,1	0,68	0,76	0,82	161

آتور صنعت
ATOORSANAT

Notes:
- *The motors can also operate at a 60Hz supply. The change in performance data can be obtained directly from the local WEG representative.*
- *The values shown herewith are subjected to change without prior notice.*

Non Sparking Top Premium Efficiency Multivoltage Motors
EEx nA IIC T3

Output KW	Output HP	Frame IEC	C_n (Nm)	I_l/I_n	T_l/T_n	T_b/T_n	Inertia J Kgm	Allowable locket rortor time Hot/Cold (s)	Weight Kg	Sound dB (A)	400V rpm min^{-1}	% of full load Efficiency 50	Efficiency 75	Efficiency 100	Power Factor Cos 50	Power Factor Cos 75	Power Factor Cos 100	I_n (A)
II Pole - 3000 min^{-1}																		
4	5,5	112M	13,2	8,50	2,6	3,1	0,00842	21/46	46	64	2900	88,7	89,8	89,8	0,61	0,79	0,85	7,56
5,5	7,5	132S	17,9	8,50	2,5	3,0	0,02056	19/42	62	68	2940	90,1	91,2	91,3	0,70	0,80	0,85	10,2
7,5	10	132S	24,4	8,50	2,7	3,1	0,02804	8/18	75	68	2940	89,0	91,3	91,6	0,72	0,83	0,87	13,6
9,2	12,5	132M	30,0	8,50	2,4	2,9	0,02430	8/18	60	68	2930	91,1	92,1	92,3	0,65	0,78	0,85	16,9
11	15	160M	35,6	8,60	2,3	3,0	0,05295	12/26	110	70	2950	91,7	93,0	93,0	0,65	0,78	0,83	20,6
15	20	160M	48,7	8,30	2,4	2,9	0,05883	11/24	115	70	2945	92,2	93,3	93,3	0,71	0,81	0,84	27,6
18,5	25	160L	60,0	9,00	2,3	2,7	0,06766	11/24	136	70	2945	92,9	93,8	93,8	0,67	0,79	0,85	33,5
22	30	180M	71,3	8,60	2,8	2,7	0,15082	9/20	180	70	2950	93,2	94,3	94,1	0,77	0,84	0,87	38,8
30	40	200L	97,0	7,60	2,7	2,4	0,20630	35/77	245	74	2955	92,6	93,9	94,2	0,75	0,83	0,86	53,5
37	50	200L	119	8,40	2,6	2,6	0,22424	16/35	260	74	2960	93,3	94,2	94,4	0,76	0,84	0,87	65,0
45	60	225S/M	142,4	8,50	2,4	2,9	0,39464	16/35	385	78	2960	95,0	95,6	95,4	0,80	0,88	0,90	75,6
55	75	250S/M	178	8,50	2,3	3,0	0,52021	18/40	470	78	2960	94,7	95,5	95,3	0,85	0,89	0,91	91,5
75	100	280S/M	241	7,00	1,6	2,6	1,27083	36/79	700	79	2975	95,2	96,1	96,0	0,83	0,88	0,89	127
90	125	280S/M	289	8,00	2,2	2,7	1,36497	59/130	740	79	2975	94,3	95,4	96,0	0,82	0,87	0,89	152
110	150	315S/M	353	8,00	1,8	2,6	1,50617	25/55	830	81	2975	95,2	96,4	96,4	0,76	0,84	0,88	187
132	175	315S/M	424	7,80	1,9	2,6	1,74151	30/66	900	81	2975	95,5	96,6	96,6	0,79	0,87	0,89	222
160	220	315S/M	514	8,20	1,9	2,6	2,11806	30/66	990	81	2975	95,5	96,6	96,6	0,79	0,86	0,89	269
IV Pole - 1500 min^{-1}																		
4	5,5	112M	26,4	6,60	2,0	2,6	0,01875	8/18	49	55	1445	87,4	89,0	89,3	0,66	0,77	0,83	7,79
5,5	7,5	132S	35,9	8,00	2,5	3,0	0,05427	10/22	75	58	1465	88,5	90,1	90,7	0,70	0,78	0,85	10,3
7,5	10	132M	48,9	8,00	2,5	3,0	0,06590	7/15	85	58	1465	89,0	91,1	91,7	0,71	0,81	0,85	13,9
11	15	160M	71,5	7,50	2,8	3,0	0,11040	12/26	135	62	1470	91,1	92,3	92,6	0,62	0,73	0,80	21,4
15	20	160L	97,8	6,30	2,0	2,4	0,11542	11/24	130	62	1465	91,1	92,4	92,9	0,65	0,76	0,82	28,4
18,5	25	180M	120	8,30	2,7	2,8	0,17939	12/26	175	64	1470	92,1	93,2	93,6	0,70	0,81	0,85	33,6
22	30	180L	143	8,60	2,8	2,9	0,25115	11/24	225	64	1475	92,9	94,0	94,3	0,68	0,78	0,84	40,1
30	40	200L	194	7,30	2,7	2,9	0,38611	19/42	280	67	1480	94,0	94,7	94,5	0,65	0,76	0,82	55,9
37	50	225S/M	240	7,20	2,2	2,7	0,69987	14/31	380	70	1475	93,6	94,7	94,9	0,77	0,85	0,88	63,9
45	60	225S/M	291	7,50	2,3	2,8	0,83984	17/37	400	70	1480	93,9	94,7	94,7	0,78	0,86	0,89	77,1
55	75	250S/M	356	8,00	2,4	2,8	1,15478	9/20	470	70	1475	93,9	94,9	95,2	0,80	0,87	0,89	93,7
75	100	280S/M	483	7,40	2,2	2,4	2,16799	21/46	660	74	1485	94,5	95,5	95,8	0,77	0,85	0,87	130
90	125	280S/M	579	8,10	2,4	2,6	2,81036	22/48	800	74	1485	95,0	95,7	96,0	0,78	0,85	0,88	154
110	150	315S/M	708	8,00	2,4	2,6	3,21184	29/64	860	77	1485	95,0	95,8	96,3	0,75	0,84	0,87	190
132	175	315S/M	849	8,30	2,5	2,6	3,77391	34/75	1000	77	1485	95,6	96,3	96,4	0,76	0,85	0,87	227
160	220	315S/M	1029	8,20	2,4	2,7	3,77391	18/40	1000	77	1485	95,7	96,3	96,5	0,75	0,84	0,87	275

آتور صنعت
ATOORSANAT

C_n = Full load torque
I_l/I_n = Locked rotor current
T_l/T_n = Locked rotor torque
T_b/T_n = Breakdown torque
I_n = Full load current

Standard voltage, connection and frequency:

220-240V △ 50Hz	380-415V △ 50Hz
380-415V Y 50Hz	660-690V Y 50Hz
440-480V Y 60Hz	440-480V △ 60Hz

Output		380V								415V							
		rpm min^{-1}	% of full load						I_n (A)	rpm min^{-1}	% of full load						I_n (A)
			Efficiency			Power Factor Cos					Efficiency			Power Factor Cos			
KW	HP		50	75	100	50	75	100			50	75	100	50	75	100	
II Pole - 3000 min^{-1}																	
4	5,5	2885	88,2	89,4	89,6	0,65	0,83	0,88	7,71	2910	88,2	89,6	89,7	0,58	0,75	0,83	7,47
5,5	7,5	2930	90,3	91,3	91,2	0,72	0,82	0,87	10,5	2950	89,8	91,2	91,3	0,66	0,77	0,83	10,1
7,5	10	2930	89,0	91,3	91,5	0,76	0,84	0,88	14,2	2945	89,0	91,3	91,6	0,70	0,80	0,85	13,4
9,2	12,5	2920	91,0	92,0	92,2	0,70	0,81	0,87	17,4	2940	91,0	92,0	92,2	0,63	0,74	0,83	16,7
11	15	2945	91,6	92,8	92,8	0,72	0,82	0,85	21,2	2955	91,6	93,0	93,1	0,61	0,74	0,81	20,3
15	20	2940	92,2	93,1	93,1	0,74	0,82	0,85	28,8	2950	92,1	93,2	93,3	0,68	0,80	0,83	26,9
18,5	25	2940	92,9	93,7	93,7	0,70	0,81	0,86	34,9	2950	92,8	93,8	93,8	0,63	0,77	0,84	32,7
22	30	2945	93,3	94,3	94,1	0,78	0,85	0,88	40,4	2955	93,0	94,2	94,0	0,75	0,83	0,86	37,9
30	40	2950	92,5	93,9	94,2	0,76	0,84	0,87	55,6	2960	92,6	93,9	94,2	0,74	0,82	0,85	52,1
37	50	2955	93,5	94,3	94,3	0,81	0,86	0,88	67,7	2960	93,0	94,0	94,4	0,73	0,82	0,86	63,4
45	60	2955	94,9	95,5	95,3	0,82	0,89	0,91	78,8	2965	94,7	95,6	95,4	0,77	0,86	0,88	74,6
55	75	2955	94,3	95,2	95,1	0,86	0,90	0,92	95,5	2960	94,6	95,5	95,4	0,83	0,88	0,90	89,1
75	100	2970	95,0	95,9	95,9	0,84	0,89	0,90	132	2975	95,2	96,2	96,1	0,80	0,86	0,88	123
90	125	2970	94,3	95,4	96,0	0,83	0,88	0,90	158	2975	94,3	95,4	96,0	0,80	0,86	0,88	148
110	150	2970	95,2	96,4	96,4	0,78	0,85	0,89	195	2975	95,0	96,3	96,3	0,72	0,82	0,87	183
132	175	2970	95,5	96,6	96,6	0,81	0,88	0,89	233	2975	95,3	96,5	96,5	0,75	0,86	0,88	216
160	220	2970	95,5	96,4	96,5	0,81	0,87	0,90	280	2975	95,3	96,5	96,6	0,77	0,85	0,88	262
IV Pole - 1500 min^{-1}																	
4	5,5	1440	87,5	88,7	88,9	0,70	0,80	0,85	8,04	1450	87,3	89,0	89,2	0,62	0,74	0,81	7,70
5,5	7,5	1460	89,0	90,0	90,5	0,72	0,80	0,86	10,7	1470	88,0	89,9	90,6	0,67	0,75	0,83	10,2
7,5	10	1460	89,5	91,0	91,5	0,73	0,82	0,86	14,5	1470	88,0	91,0	91,7	0,68	0,80	0,84	13,5
11	15	1465	91,0	92,2	92,5	0,64	0,75	0,82	22,0	1475	91,0	92,2	92,6	0,60	0,70	0,78	21,2
15	20	1460	91,2	92,3	92,8	0,70	0,79	0,84	29,2	1470	91,0	92,3	92,8	0,60	0,73	0,80	28,1
18,5	25	1465	92,0	93,2	93,5	0,73	0,84	0,87	34,6	1475	92,0	93,2	93,6	0,65	0,78	0,84	32,7
22	30	1470	93,0	94,0	94,3	0,70	0,80	0,85	41,7	1475	92,5	93,9	94,3	0,66	0,76	0,83	39,1
30	40	1475	94,1	94,6	94,4	0,69	0,79	0,84	57,5	1480	93,8	94,5	94,5	0,60	0,73	0,80	55,2
37	50	1475	93,5	94,7	94,9	0,78	0,86	0,89	66,6	1480	93,3	94,6	94,8	0,76	0,84	0,87	62,4
45	60	1475	94,0	94,8	94,5	0,79	0,87	0,90	80,4	1480	93,8	94,7	94,8	0,76	0,85	0,88	75,0
55	75	1475	94,0	94,8	95,2	0,81	0,88	0,90	97,5	1480	93,8	94,8	95,1	0,79	0,86	0,88	91,4
75	100	1480	94,6	95,5	95,8	0,79	0,86	0,88	135	1485	94,3	95,5	95,7	0,75	0,84	0,86	127
90	125	1485	95,0	95,6	95,9	0,80	0,86	0,89	160	1485	95,0	95,7	96,0	0,75	0,84	0,87	150
110	150	1480	95,0	95,8	96,2	0,76	0,85	0,88	197	1485	94,8	95,7	96,2	0,73	0,83	0,86	185
132	175	1480	95,5	96,3	96,3	0,78	0,86	0,88	237	1485	95,5	96,2	96,4	0,73	0,84	0,86	222
160	220	1480	95,8	96,3	96,5	0,77	0,85	0,88	286	1485	95,5	96,2	96,5	0,70	0,83	0,85	271

آتور صنعت
ATOORSANAT

Notes:
- *The motors can also operate at a 60Hz supply. The change in performance data can be obtained directly from the local WEG representative.*
- *The values shown herewith are subjected to change without prior notice.*

EEx d - Explosion Proof Multivoltage Motors
EEx de - Explosion Proof Multivoltage Motors with Increased Safety Terminal Box
Mechanical Data

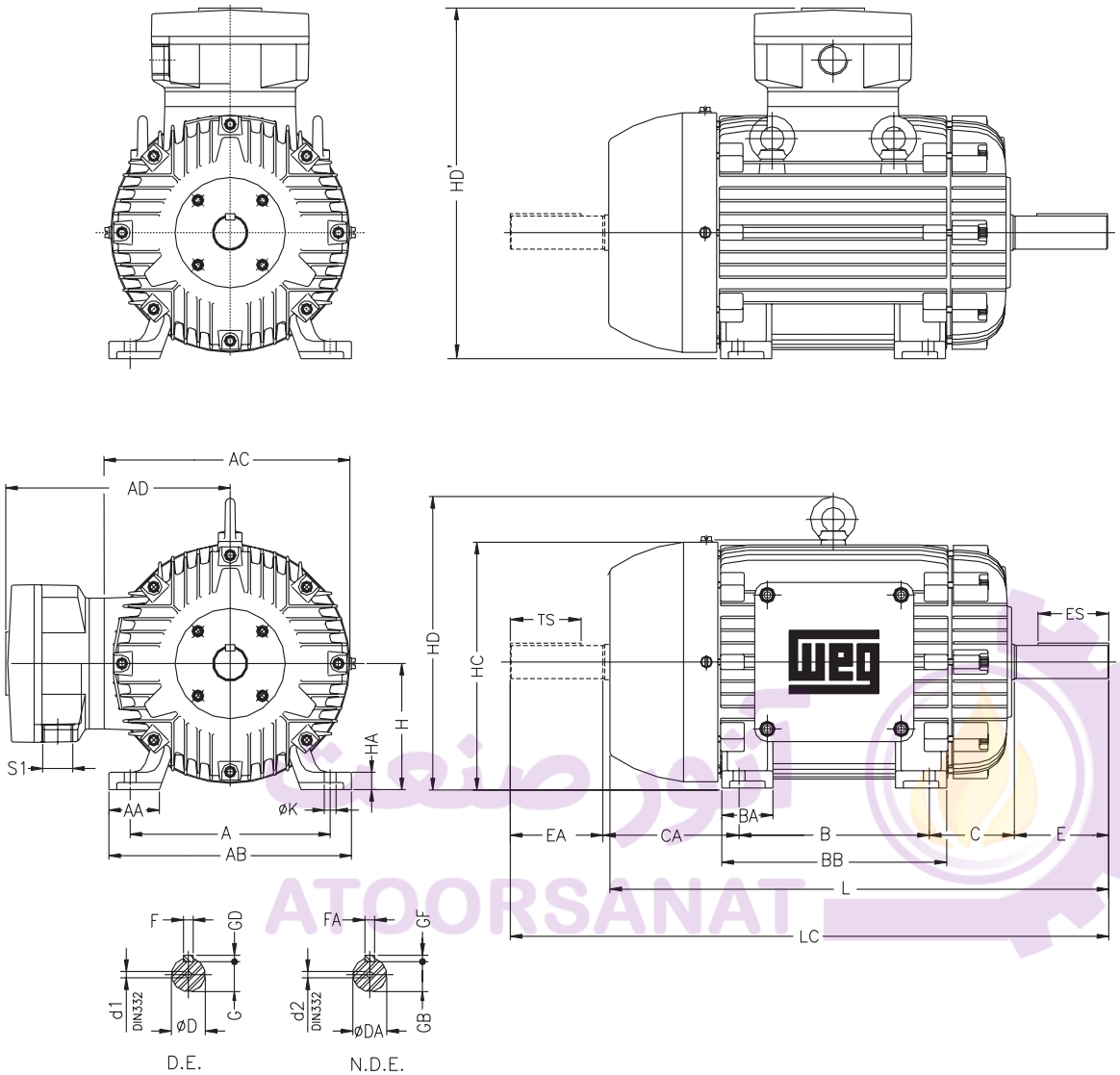

FRAME	A	AA	AB	AC	AD	B	BA	BB	C	CA	SHAFT DIMENSIONS D	E	ES	F	G	GD	DA	EA	TS	FA	GB	GF	H	HA	HC	HD	HD'	K	L	LC	S1	d1	d2	BEARINGS D.E.	O.D.E.
90S	140	38	164	179	214	100	42	131	56	114	24j6	50	36	8	20	7	16j6	40	28	5	13	5	90	12	177	–	304	10	316	350	M25 x 1.5	DM8	DM6	6205-ZZ	6204-ZZ
90L						125		156																					341	375					
100L	160	44	188	199	224	140	50	173	63	128	28j6	60	45		24		22j6	50	36	6	18.5	6	100	15	200		324	12	384	431		DM10	DM8	6206-ZZ	6205-ZZ
112M	190	48	220	223	246			183	70								24j6			8	20	7	112	17	237	222	358		394	448				6307-ZZ	6206-ZZ
132S	216	51	248	270	269		55	188	89	150	38k6	80	63	10	33	8	28j6	60	45		24		132	19.5	282	330	401		451	519	M32 x 1.5	DM12	DM10	6308-ZZ	6207-ZZ
132M						178		226																					489	557					
160M	254	64	308	312	311	210	65	254	108	174	42k6	110	80	12	37		42k6	110	80	12	37	8	160	22	315	370	471	14.5	598	712	2 x M40 x 1.5	DM16		6309-C3	6209-Z-C3
160L						254		298																					652	756					
180M	279	80	350	358	329	241	75	294	121	200	48k6			14	42.5	9	48k6			14	42.5	9	180	28	367	422	509		664	782				6311-C3	6211-Z-C3
180L						279		332																					702	820					
200M	318	82	385	399	367	267	85	332	133	222	55m6			16	49	10							200	30	403	477	567	18.5	729	842	2 x M50 x 1.5	M20		6312-C3	6212-Z-C3
200L						305		370																					767	880					
225S/M	356	80	436	472	413	286	105	391	149	149	55m6*		100				55m6*		100	16	49	10	225	34	475	550	638		817	935				6314-C3	
											60m6	140	125				60m6	140	125	18									847	995					
250S/M	406	100	506			311	138	445	168	168	60m6*			18	53	11	60m6*				53	11	250	42	500	575	663	24	923	1071	2 x M63 x 1.5				
						349					65m6*						60m6																		
280S/M	457		557	610	552	368	142	510	190	190	65m6*				58		60m6*						280		600	693	832		1036	1188					
						419					75m6			20	67.5	12	65m6				58													6316-C3	
315S/M	508	120	628		572	406	152	558	216	216	65m6*			18	58	11	60m6*				53		315	52	640	728	887	28	1126	1278				6314-C3	
						457					80m6	170	160	22	71	14	65m6				58								1156	1308				6319-C3	6316-C3
355M/L	610	140	750	780	672	560	200	760	254	254	75m6*	140	125	20	67.5	12	60m6*				53		355	50	755	864	1027		1399	1545				6316-C3	6314-C3
						630					100m6	210	200	18	90	16	80m6	170	160	22	71	14							1469	1645		M24	M20	NU-322-C3	6319-C3

- All the dimensions are in millimeters
- The data for frame 355M/L shown above are for horizontal mounting applications under standard coupling loads
- The customer must indicate when application is vertical or under special coupling loads
- The average values shown are subject to change without prior notice
- To obtain guaranteed values please contact our nearest sales office

* Shaft dimensions for II pole motors, only for direct coupling

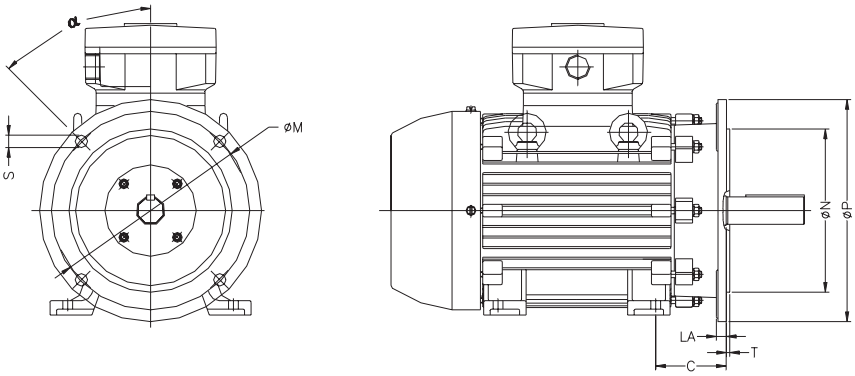

FRAME	"FF" FLANGE DIMENSIONS									n° of Holes
	Flange	C	LA	M	N	P	T	S	α	
90S/L	FF-165	56	10	165	130	200	3.5	12	45°	4
100L	FF-215	63	11	215	180	250	4	15		
112M		70								
132S/M	FF-265	89	12	265	230	300				
160M/L	FF-300	108	13	300	250	350	5	19		
180M/L		121	14							
200M/L	FF-350	133	18	350	300	400				
225S/M	FF-400	149		400	350	450			22°30'	8
250S/M	FF-500	168		500	450	550				
280S/M		190								
315S/M	FF-600	216	22	600	550	660	6	24		
355M/L	FF-740	254		740	680	800				

آتور صنعت
ATOORSANAT

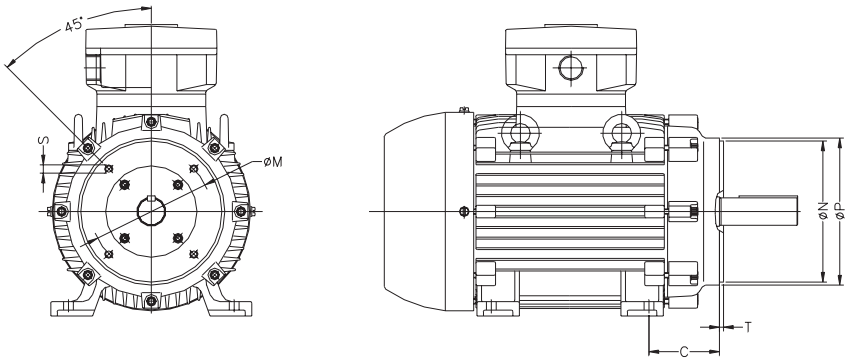

FRAME	"C" DIN FLANGE DIMENSIONS							n° of Holes
	Flange	C	M	N	P	S	T	
90S/L	C-140	56	115	95	140	M8	3	4
100L	C-160	63	130	110	160		3.5	
112M		70						
132S/M	C-200	89	165	130	200	M10		

EEx e – Increased Safety Multivoltage Motors
EEx nA - Non Sparking Multivoltage Motors
Mechanical Data

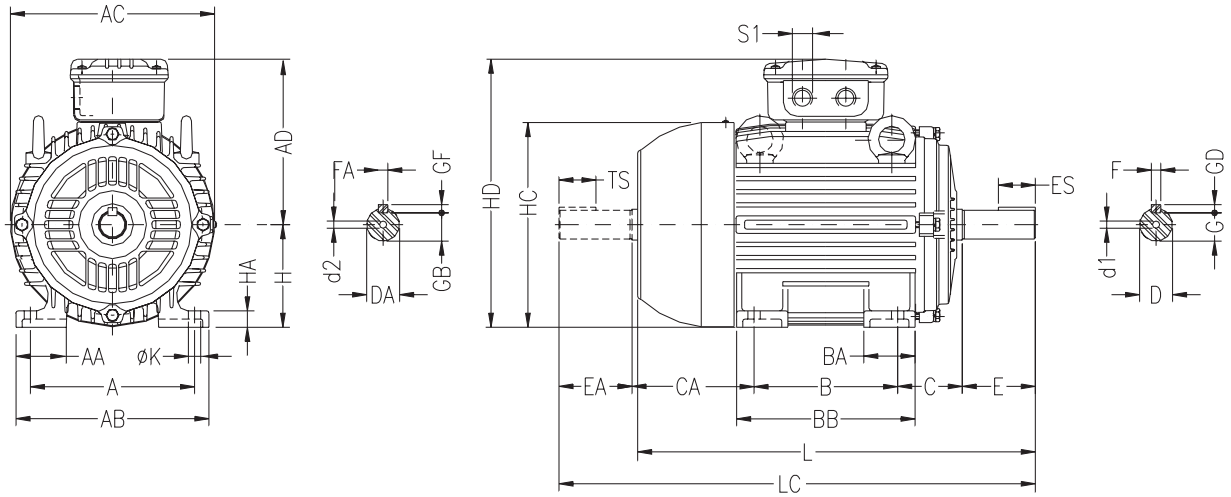

	FRAME	A	AA	AB	AC	AD	B	BA	BB	C	CA	SHAFT DIMENSIONS D	E	ES	F	G	GD	DA	EA	TS	FA	GB	GF	H	HA	HC	HD	K	L	LC	S1	d1	d2	BEARINGS D.E.	O.D.E.
EEx e and EEx nA motors	63	100	21	116	125	130	80	22	95	40	78	11j6	23	14	4	8.5	4	9j6	20	12	3	7.2	3	63	8	124	193	7	216	241		EM4	EM3	6201-ZZ	
	71	112	30	132	141	138	90	38	113.5	45	88	14j6	30	18	5	11	5	11j6	23	14	4	8.5	4	71	12	139	209		248	276	2xM20x1.5	DM5	EM4	6203-ZZ	6202-ZZ
	80	125	35	149	159	147	100	40	125.5	50	93	19j6	40	28	6	15.5	6	14j6	30	18		11	5	80	13	157	227	10	276	313		DM6	DM4	6204-ZZ	6203-ZZ
	90S	140	38	164	179	157	42	131	56	104	24j6	50	36	8	20	7	16j6	40	28	5	13		90	15	177	247		304	350	2xM25x1.5	DM8	DM6	6205-ZZ	6204-ZZ
	90L						125	156																					329	375					
	100L	160	49	188	199	167	140	50	173	63	118	28j6	60	45		24		22j6	50	36	6	18.5	6	100	16	198	267	12	376	431		DM10	DM8	6206-ZZ	6205-ZZ
	112M	190	48	220	222	189		55	177	70	128							24j6			8	20		112	18.5	235	301		393	448				6307-ZZ	6206-ZZ
	132S	216	51	248	270	217			187	89	150	38k6	80	63	10	33	8	28j6	60	45		24	7	132	20	274	349		452	519	2xM32x1.5	DM12	DM10	6308-ZZ	6207-ZZ
	132M						178		225																				490	557					
EEx nA motors	160M	254	64	308	312	250	210	65	254	108	174	42k6	110	80	12	37		42k6	110	80	12	37	8	160	22	317	410	14.5	598	712	2xM40x1.5	DM16		6309-C3	6209-Z-C3
	160L						254		298																				642	756					
	180M	279	80	350	358	270	241	75	294	121	200	48k6			14	42.5	9	48k6			14	42.5	9	180	28	360	450		664	782				6311-C3	6211-Z-C3
	180L						279		332																				702	820					
	200M	318	82	385	396	294	267	85		133	222	55m6			16	49	10							200	30	402	494	18.5	729	842	2xM50x1.5	M20		6312-C3	6212-Z-C3
	200L						305		370																				767	880					
	225S/M	356	80	436	476	368	286	105	391	149	280	55m6*		100				55m6*		100	16	49	10	225	34	466	593		817	935				6314-C3	
							311				255	60m6				53		60m6											847	995					
	250S/M	406	100	506				138	449	168	312	60m6*			18		11	60m6*				53		250	42	491	618	24	923	1071	2xM63x1.5				
							349				274	65m6				58		60m6																	
	280S/M	457		557	600	463	368	142	510	190	350	65m6*	140	125				60m6*	140	125	18		11	280		578	743		1036	1188				6316-C3	
							419				299	75m6			20	67.5	12	65m6				58													
	315S/M	508	120	628		492	406	152	558	216	376	65m6*			18	58	11	60m6*				53		315	52	613	807	28	1126	1278				6314-C3	
							457				325	80m6	170	160	22	71	14	65m6				58							1156	1308				6319-C3	6316-C3

- All the dimensions are in millimeters
- The average values shown are subject to change without prior notice
- To obtain guaranteed values please contact our nearest sales office
- Shaft dimensions for II pole motors, only for direct coupling

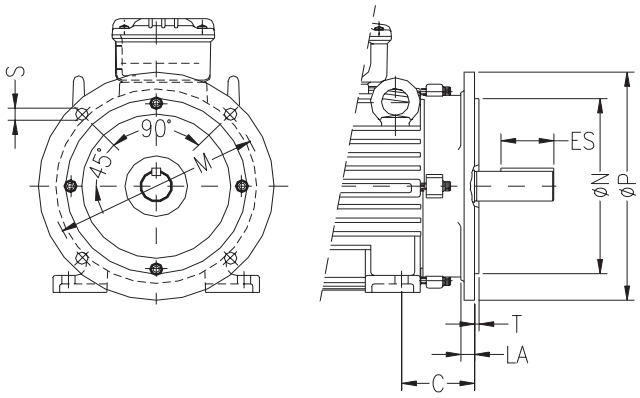

	FRAME	"FF" FLANGE DIMENSIONS									n° of Holes
		Flange	C	LA	M	N	P	T	S		
EEx e and EEx nA motors	63	FF-115	40	9	115	95	140	3	10	45°	4
	71	FF-130	45		130	110	160	3.5			
	80	FF-165	50	10	165	130	200		12		
	90S/L		56								
	100L	FF-215	63	11	215	180	250	4	15		
	112M		70								
	132S/M	FF-265	89	12	265	230	300				
EEx nA motors	160M/L	FF-300	108	18	300	250	350	5	19		
	180M/L		121								
	200M/L	FF-350	133		350	300	400				
	225S/M	FF-400	149		400	350	450			22°30'	8
	250S/M	FF-500	168		500	450	550				
	280S/M		190								
	315S/M	FF-600	216	22	600	550	660	6	24		

آتور صنعت
ATOORSANAT

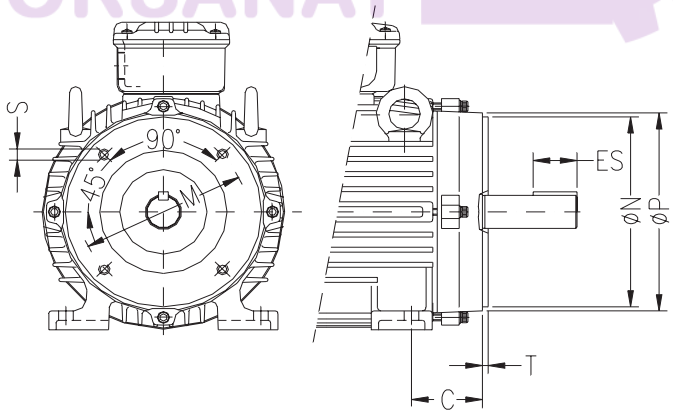

	FRAME	"C" DIN FLANGE DIMENSIONS							n° of Holes
		Flange	C	M	N	P	S	T	
EEx e and EEx nA motors	63	C-90	40	75	60	90	M5	2.5	4
	71	C-105	45	85	70	105	M6		
	80	C-120	50	100	80	120		3	
	90S/L	C-140	56	115	95	140	M8		
	100L	C-160	63	130	110	160		3.5	
	112M		70						
	132S/M	C-200	89	165	130	200	M10		

آتور صنعت
ATOORSANAT

MEDIUM & HIGH VOLTAGE MOTORS FOR HAZARDOUS LOCATIONS

Increased Safety Motors - EEx e

CERTIFIED BY PTB CEPEL

- Three-phase, 50 or 60Hz
- Outputs from 100 to 3150KW
- Cast iron frames(315 up to 560)
- Steel laminated frames (630)
- II, IV, VI, VIII and X poles
- up to 6600V
- Degree of protection IP55
- Class of temperature T3

Classification:

- Zone 1,Group IIC (IEC standard)
- Group IIC, Category 2 (CENELEC standard)

Non Sparking Motors - EEx nA

CERTIFIED BY CEPEL

Manufacture´s
Claim of Compliance

- Three-phase, 50 or 60Hz
- Outputs from 100 to 3150KW
- Cast iron frames(315 up to 560)
- Rolled steel frames (630)
- II, IV, VI, VIII and X poles
- up to 6600V
- Degree of protection IP55
- Class of temperature T3

Classification:

- Zone 2, Group IIC (IEC standard)
- Group IIC, Category 3 (CENELEC standard)

Pressurization - EEx p

CERTIFIED BY

CEPEL

Available on request.

ALL MOTORS MEET ATEX DIRECTIVE

QUALITY SYSTEM ISO 9001 WEG MOTORES

آتور صنعت
ATOORSANAT

WEG OFFICES IN EUROPE:

BELGIUM - WEG EUROPE S.A.
Rue Buisson Aux Loups, 7 - 1400 Nivelles, Belgium
Phone: +32 (67) 88-8420
Fax: +32 (67) 84-1748
E-mail: info@wegeurope.be

FRANCE - WEG FRANCE
17, Rue de Bruxelles - 38070 St. Quentin Fallavier, France
Phone: 33 (0) 474 99 1135
Fax: 33 (0) 474 99 1144
E-mail: services@wegfrance.fr

GERMANY - WEG GERMANY GmbH
Alfred-Nobel-Str. 7-9 - D-50226 Frenchen, Germany
Phone: +49 (2234) 9 5353-0
Fax: +49 (2234) 9 5353-10
E-mail: info@weg-germany.de

ITALY - WEG ITALIA S.R.L.
Via Milazzo, 21
20092 Cinisello Balsamo - Milano, Italy
Phone: (39) 02 6129-3535
Fax: (39) 02 6601-3738
E-mail: info@wegitalia.com

PORTUGAL - WEG EURO - INDÚSTRIA ELÉCTRICA, S.A.
Rua Eng. Frederico Ulrich - Apartado 6074
4476-908, Maia, Portugal
Phone: +351 229 477 708/700
Fax: +351 229 477 792
E-mail: sales@weg.com.pt

SPAIN - WEG IBERIA
Poligono Industrial Miralrio
C/ Ebanistas, 8 - 28891 Velilla de San Antonio
Madrid, Spain
Phone: 34 91 655 3008
Fax: 34 91 655 3058
E-mail: wegiberia@wegiberia.es

SWEDEN - WEG SCANDINAVIA AB
Box 10196, Verkstadgatan 9
434 22 Kungsbacka,Sweden
Phone: (46) 300 73400
Fax: (46) 300 70264
E-mail: info@weg.se

THE NETHERLANDS - WEG NETHERLANDS-Branch of WEG Europe
Keulenstraat 4E - 7418 ET Devender, The Netherlands
Phone: +31 (0) 570-620550
Fax: +31 (0) 570-620560
E-mail: berend@weg-netherlands.nl

UNITED KINGDOM - WEG ELECTRIC MOTOR (U.K.) LTD
28/29 Walkers Road Manorside Industrial Estate
North Moons Moat Redditch
Worcestershire B98 9HE, United Kingdom
Phone: 44 (01527) 596-748
Fax: 44 (01527) 591-133
E-mail: wegsales@wegelectricmotors.co.uk

WEG EXPORTADORA S.A.
Av. Pref. Waldemar Grubba, 3000
89256-900 Jaraguá do Sul - SC - BRAZIL
Phone: +55 (47) 372-4002 / Fax: +55 (47) 372-4060
E-mail: wex-mark@weg.com.br
http://www.weg.com.br

397.05/112002